MANUFACTURER DOCUMENT PACKAGE

Manufacturer's Manual

Amikon cover with selected official Siemens pages

SIMATIC ET 200PA SMART

6ES7650-8PA00-0AA0

ET 200PA SMART IM 650 BUS MODULE

OFFICIAL SOURCES

Siemens official PDF. Selected pages retain their original content, color and aspect ratio.

SIEMENS

Operating Instructions

Preface

Product overview 1

Assignment planning 2

Installation 3

Connecting 4

Commissioning 5

Maintenance and service 6

Functions 7

Interrupt, error and system messages 8

Interface module IM 650 9

ET 200PA SMART I/O modules 10

Standards and approvals 11

Contact 12

05/2020

A5E34192013-AC

Legal information

Warning notice system

This manual contains notices you have to observe in order to ensure your personal safety, as well as to prevent damage to property. The notices referring to your personal safety are highlighted in the manual by a safety alert symbol, notices referring only to property damage have no safety alert symbol. These notices shown below are graded according to the degree of danger.

⚠ DANGER
indicates that death or severe personal injury **will** result if proper precautions are not taken.

⚠ WARNING
indicates that death or severe personal injury **may** result if proper precautions are not taken.

⚠ CAUTION
indicates that minor personal injury can result if proper precautions are not taken.

NOTICE
indicates that property damage can result if proper precautions are not taken.

If more than one degree of danger is present, the warning notice representing the highest degree of danger will be used. A notice warning of injury to persons with a safety alert symbol may also include a warning relating to property damage.

Qualified Personnel

The product/system described in this documentation may be operated only by **personnel qualified** for the specific task in accordance with the relevant documentation, in particular its warning notices and safety instructions. Qualified personnel are those who, based on their training and experience, are capable of identifying risks and avoiding potential hazards when working with these products/systems.

Proper use of Siemens products

Note the following:

⚠ WARNING
Siemens products may only be used for the applications described in the catalog and in the relevant technical documentation. If products and components from other manufacturers are used, these must be recommended or approved by Siemens. Proper transport, storage, installation, assembly, commissioning, operation and maintenance are required to ensure that the products operate safely and without any problems. The permissible ambient conditions must be complied with. The information in the relevant documentation must be observed.

Trademarks

All names identified by ® are registered trademarks of Siemens AG. The remaining trademarks in this publication may be trademarks whose use by third parties for their own purposes could violate the rights of the owner.

Disclaimer of Liability

We have reviewed the contents of this publication to ensure consistency with the hardware and software described. Since variance cannot be precluded entirely, we cannot guarantee full consistency. However, the information in this publication is reviewed regularly and any necessary corrections are included in subsequent editions.

Siemens AG
Digital Industries
Postfach 48 48
90026 NÜRNBERG
GERMANY

A5E34192013-AC
℗ 06/2020 Subject to change

Copyright © Siemens AG 2020.
All rights reserved

Preface

Purpose of the operating instructions

The information in these operating instructions enables you to operate the ET 200PA SMART Distributed I/O system with the IM 650 interface module, the ET 200PA SMART I/O modules, and the single-width I/O modules of the S7-300 range released for PCS 7 as a DP slave.

Note

The ET 200PA SMART I/O modules function only in connection with an IM 650 interface module. If the ET 200PA SMART modules are plugged behind an ET 200M interface module (e.g., IM 153-2BA02) or behind an S7-300 CPU, the function of the ET 200PA SMART modules is not available. The ET 200PA SMART modules indicate this with a red SF LED flashing at 2 Hz. An ET 200PA SMART module does not affect the ET 200M / S7-300 bus. This means that other modules of the ET 200M / S7 300 station remain operable without restriction.

Basic knowledge required

To understand the operating instructions you require general experience in the field of automation engineering.

Range of validity of these operating instructions

	Module	Article no.	As of product version
Interface module	Interface module IM 650-8PH	6ES7650-8PH00-xAA0	01
I/O modules	Digital input module DI 16 x 24VDC	6ES7650-8DK70-xAA0	01
	Digital input module DI 32 x 24VDC	6ES7650-8DK80-xAA0	01
	Digital output module DO 16 x 24VDC/0.5A	6ES7650-8EK70-xAA0	01
	Digital output module DO 32 x 24VDC/0.5A	6ES7650-8EK80-xAA0	01
	Analog input module AI 8 x 13-bit	6ES7650-8AE60-xAA0	01
	Analog input module AI 8 x 16-bit	6ES7650-8AK60-xAA0	01
	Analog input module AI 16 x 16-bit	6ES7650-8AK70-xAA0	01
	Analog input module AI 8 x 16-bit HART	6ES7650-8AT60-xAA0	01
	Analog input module AI 8 x TC/4xRTD	6ES7650-8AR60-xAA0	01
	Analog output module AO 8 x 12-bit	6ES7650-8BK60-xAA0	01
	Analog output module AO 8 x 16-bit HART	6ES7650-8BT60-xAA0	01

	Module	Article no.	As of product version
Active bus modules (BM)	Bus module (BM) PS/IM	6ES7650 8PA00-xAA0	01
	Bus module (BM) 2x40	6ES7650 8PC00-xAA0	01
	Bus module (BM) IM/IM	6ES7650 8PB00-xAA0	01

x = 1: Module with conformal coating for use under elevated ambient conditions

x = 0: Standard module

Convention: In the following, the designation IM 650 is used in the operating instructions for the 650-8PH interface module.

For new versions of the ET 200PA SMART components, we reserve the right to enclose product information containing current information about the respective module or the operating instructions.

This product information can also be found on the Internet (http://support.automation.siemens.com). Search there for "ET 200PA SMART", for example.

Approvals, standards and certificates

See section "Standards and approvals".

Position in the Information Landscape

This manual contains a complete description of the ET 200PA SMART Distributed I/O system.

If you are using I/O modules from the S7-300 series of modules, you can find information on them in the following manuals:

Manual	Contents
Automation System S7-300, Module Data (http://support.automation.siemens.com/WW/view/en/8859629)	• General technical specifications • Power supply modules • Digital modules • Analog modules • Order numbers for S7-300
ET 200M Signal Modules for Process Automation (http://support.automation.siemens.com/WW/view/en/7215812)	• Overview of the use in process automation • Parameter assignment with *SIMATIC PDM* • Digital input module • Digital output module
ET 200M Distributed I/O Device HART Analog Modules (http://support.automation.siemens.com/WW/view/en/22063748)	• HART analog modules • Expanded input data (HART auxiliary variables)

Manual	Contents
SIMATIC S7-300 Product Information for Digital Input Module SM 321; DI 64 x DC 24 V, Sinking/Sourcing; (6ES7321-1BP00-0AA0) SIMATIC S7-300 Product Information for Digital Input Module SM 321; DI 64 x DC 24 V, Sinking/Sourcing	• 64-channel digital input/output modules
SIMATIC Automation System S7-300, ET 200M EX I/O Modules	• Fundamental guidelines and specifications • Configuration specifications • Ex I/O modules including Ex HART analog modules

The ET 200PA SMART Distributed I/O system can only be operated on a CPU 410. Therefore, you also need the manual of the utilized CPU 410.

Manual	Contents
CPU 410-5H Process Automation CPU 410-5H Process Automation/CPU 410 SMART	• Configuring and commissioning a DP master system • Description of the DP master

The description of the parameter assignment and configuration message frame is not a constituent part of these operating instructions. You can find a description of this on the Internet (http://support.automation.siemens.com/WW/view/en/1455647).

Guide

To easily obtain quick access to the specific information, the operating instructions contain the following access aids:

- You can find a complete table of contents and a list of figures and tables contained throughout the operating instructions at the beginning.
- At the end of the operating instructions, you can find an index that provide quick access to the information for which you are looking.

Recycling and disposal

The ET 200PA SMART is environmentally compatible and can therefore be recycled. Contact a certified electronic-waste disposal company to recycle and dispose of your old equipment in an environment-friendly manner.

Training

We offer a range of relevant courses to help you to get started with the SIMATIC S7 automation system. Please contact your local training center or the central training center.

Training (http://www.sitrain.com/index_en.html)

SIMATIC Technical Support

For technical support of all Industry Automation products, fill in and submit the online Support Request:

Support Request (http://www.siemens.de/automation/support-request)

Service & Support on the Internet

In addition to our documentation, we offer a comprehensive online knowledge base on the Internet at:

Service & Support (http://www.siemens.com/automation/service&support)

There, you can find the following information:

- The newsletter containing the latest information on your products.
- The latest documents via our search function in Service & Support.
- A forum for global information exchange by users and specialists.
- Your local Automation representative.
- Information on field service, repairs and spare parts. Much more can be found under "Services".

Additional support

If you have further questions about the use of products presented in this manual, please contact your local Siemens representative.

You can find your personal contact on the Internet:

Contact partners (http://www.siemens.com/automation/partner)

A guide to the technical documentation for the various SIMATIC products and systems is available on the Internet:

Documentation (http://www.automation.siemens.com/simatic/portal/html_76/techdoku.htm)

The online catalog and the online ordering system are available on the Internet:

Catalog (http://mall.automation.siemens.com/)

Security information

Siemens provides products and solutions with industrial security functions that support the secure operation of plants, systems, machines and networks.

In order to protect plants, systems, machines and networks against cyber threats, it is necessary to implement – and continuously maintain – a holistic, state-of-the-art industrial security concept. Siemens' products and solutions constitute one element of such a concept.

Customers are responsible for preventing unauthorized access to their plants, systems, machines and networks. Such systems, machines and components should only be connected to an enterprise network or the internet if and to the extent such a connection is necessary and only when appropriate security measures (e.g. firewalls and/or network segmentation) are in place.

For additional information on industrial security measures that may be implemented, please visit
https://www.siemens.com/industrialsecurity.

Siemens' products and solutions undergo continuous development to make them more secure. Siemens strongly recommends that product updates are applied as soon as they are available and that the latest product versions are used. Use of product versions that are no longer

supported, and failure to apply the latest updates may increase customer's exposure to cyber threats.

To stay informed about product updates, subscribe to the Siemens Industrial Security RSS Feed under
https://www.siemens.com/industrialsecurity.

Table of contents

Preface 3

1 Product overview 13

1.1 What Are Distributed I/O Devices 13

1.2 What is PROFIBUS DP? 13

1.3 ET 200PA SMART Distributed I/O device 14

2 Assignment planning 17

2.1 Configuration variants 17

2.2 Configuring the mechanical structure 17
2.2.1 Horizontal or vertical configuration 17
2.2.2 Clearance Measurements 18
2.2.3 Arrangement of the modules for the function "Change During Operation" and / or "Redundancy" 20

2.3 Configuring the electrical structure 22
2.3.1 General rules and regulations for operating an ET 200PA SMART 22
2.3.2 Operation of the ET 200PA SMART with process I/O on a grounded supply 24
2.3.3 Configuration of the ET 200PA SMART with ungrounded reference potential 27
2.3.4 Configuration of the ET 200PA SMART with isolated modules 29
2.3.5 Configuration of the ET 200PA SMART with non-isolated modules 30

3 Installation 31

3.1 Overview 31

3.2 Installation 31
3.2.1 Mounting Sequence 31
3.2.2 Installing the DIN rail 32
3.2.3 Installing active bus modules and modules 35
3.2.4 After installation 38

3.3 Setting the PROFIBUS address 39

4 Connecting 41

4.1 Overview 41

4.2 Connecting PROFIBUS DP 41
4.2.1 Connecting the Bus Connector 41

4.3 Wiring the power supply and modules 42
4.3.1 Wiring rules 42
4.3.2 Wiring the power supply and IM 650 43
4.3.3 Wiring front connectors of the signal modules 45
4.3.4 Connecting shielded cables via a shield connecting element 49

5 Commissioning 53

5.1 PROFIBUS DP 53

5.1.1 Commissioning the DP slave 53
5.1.2 Startup of the IM 650 54

6 Maintenance and service 59

6.1 Maintenance of ET 200PA SMART 59

6.2 Replacing the power supply module 59

6.3 Replacing the IM 650 60

6.4 Replacing I/O modules 63

6.5 Replacing the bus module 65

6.6 Exchanging fuses in digital output modules 66

6.7 Update of the IM 650 67
6.7.1 When should you update the IM 650? 67
6.7.2 Update of the IM 650 68

7 Functions 71

7.1 Connection of HART field devices 71

7.2 Expanded I/O input data 72

7.3 Support of additional input data 72

7.4 Time stamping of the input signals with IM 650 73
7.4.1 Principles 73
7.4.2 Time stamp with 10 ms precision 75
7.4.3 Highly precise time stamp with 1 ms precision 77
7.4.4 Time synchronization for time stamping 78
7.4.5 Time stamping in the redundant system 79

7.5 Time synchronization on the ET 200PA SMART I/O bus 80

7.6 Redundancy with IM 650 81

7.7 System modification during operation 83

7.8 Identification and maintenance data (I&M data) 83
7.8.1 I&M data for PROFIBUS DP 84

8 Interrupt, error and system messages 87

8.1 Concept for Drivers and Diagnostic Blocks 87

8.2 Diagnostics of the IM 650 by LED displays 88

8.3 S7 diagnostics 91
8.3.1 Structure of slave diagnosis 91
8.3.2 Station statuses 1 to 3 93
8.3.3 Master PROFIBUS address 94
8.3.4 Manufacturer ID 95
8.3.5 Evaluating the slave diagnosis 96
8.3.6 Identifier-related diagnosis 96
8.3.7 Module status 98
8.3.8 Channel-specific diagnostics 99
8.3.9 H-status, only in redundant configurations 103
8.3.10 Interrupts 105
8.3.11 Evaluating interrupts of device-related diagnostics 115

9 Interface module IM 650 117

9.1 Parameters of the IM 650 117

9.2 Technical specifications of the IM 650 118

9.3 Response time of the ET 200PA SMART 120

9.4 Use of the ET 200PA SMART in hazardous area zone 2 121

10 ET 200PA SMART I/O modules 123

10.1 Module overview 123

10.2 Digital input modules 125
10.2.1 Digital input module DI 32 x DC 24 V 126
10.2.2 Digital input module DI 16 x DC24V 130
10.2.2.1 Parameters of the DI 16 x DC 24 V 134
10.2.2.2 Diagnostics of the DI 16 x DC 24 V 135

10.3 Digital output modules 137
10.3.1 Digital output module DO 32 x DC 24 V/ 0.5 A 137
10.3.2 Digital output module DO 16 x DC 24 V/0.5 A 142
10.3.2.1 Parameters of the DO 16 x DC 24 V/0.5 A 146
10.3.2.2 Diagnostics of the DO 16 x DC 24 V/0.5 A 147
10.3.3 How to protect digital modules from inductive overvoltage 148

10.4 Analog input modules 150
10.4.1 Analog input module AI 8 x 13-bit 152
10.4.1.1 Measurement types and measuring ranges 161
10.4.1.2 Parameters of the AI 8 x 13 bits 161
10.4.1.3 Supplemental information on AI 8 x 13-bit 163
10.4.2 Analog input module AI 8 x 16 Bit 165
10.4.2.1 Parameters of the AI 8 x 16 Bit 173
10.4.2.2 Diagnostics of the AI 8 x 16 Bit 174
10.4.3 Analog input module AI 8 x 16 Bit HART 176
10.4.3.1 Parameters of the AI 8 x 16 Bit HART 186
10.4.3.2 Diagnostics of the AI 8 x 16 Bit HART 188
10.4.4 Analog input module AI 16 x 16 Bit 192
10.4.4.1 Parameters of the AI 16 x 16 Bit 200
10.4.4.2 Diagnostics of the AI 16 x 16 Bit 201
10.4.5 Analog input module AI 8 x TC/4 x RTD 202
10.4.5.1 Parameters of the AI 8 x TC/4 x RTD 212
10.4.5.2 Diagnostics of the AI 8 x TC/4 x RTD 215

10.5 Analog output modules 216
10.5.1 Analog output module AO 8 x 12 Bit 217
10.5.1.1 Parameters of the AI 8 x 12 Bit 224
10.5.1.2 Diagnostics of the AO 8 x 12 Bit 225
10.5.2 Analog output module AO 8 x 16 Bit HART 226
10.5.2.1 Parameters of the AO 8 x 16 Bit HART 233
10.5.2.2 Diagnostics of the AO 8 x 16 Bit HART 234
10.5.2.3 Readback option of the analog values of the AO 8 x 16 Bit HART 237

10.6 Module diagnostic data 237

10.7 HART 238
10.7.1 How HART works 239

10.7.2 Configuring HART variables 245
10.7.3 HART communication data records 246
10.8 Dimensional drawings of the signal modules 252
11 Standards and approvals 253
11.1 Currently valid markings and approvals 253
11.2 CE marking 255
11.3 Explosion protection 257
12 Contact 259
Index 261

Product overview 1

1.1 What Are Distributed I/O Devices

Area of application

When a system is set up, it is common for the inputs to and outputs from the process to be incorporated centrally in the automation system.

When the inputs and outputs are located at large distances from the automation system, the wiring may become very extensive and confusing. Electromagnetic interference may impair reliability.

Distributed I/O devices are the ideal solution for such systems:

- The control CPU is located at a central location.
- The I/O devices (inputs and outputs) operate locally at their distributed locations.
- The powerful PROFIBUS DP with fast data transmission speeds ensures that the control CPU and the I/O devices communicate smoothly.

1.2 What is PROFIBUS DP?

What is PROFIBUS DP?

PROFIBUS DP is an open bus system according to IEC 61784-1:2002 Ed1 CP 3/1 with the "DP" transmission protocol. DP stands for distributed peripherals.

Physically, the PROFIBUS DP is either an electric network based on a shielded two-wire line (RS 485) or an optical network based on a fiber-optic cable (FOC).

The transmission protocol "DP enables a fast, cyclic data exchange between the control CPU and the distributed I/Os.

What are the DP master and DP slaves?

The DP master is the connecting link between the control CPU and the distributed I/Os. The DP master exchanges the data via the PROFIBUS DP with the distributed I/Os and monitors the PROFIBUS DP.

The distributed I/Os (= DP slaves) prepare the data of the encoder and the actuators on site in such a way that they can be transmitted via the PROFIBUS DP to the control CPU.

Structure of a PROFIBUS DP network

The figure below illustrates a typical PROFIBUS DP network structure. The DP masters are integrated into the respective device. The CPU, e.g. a CPU 410-5H Process Automation, has an integrated PROFIBUS DP interface (DP master). The ET 200PA SMART is a DP slave that is connected to the CPU via PROFIBUS DP. .

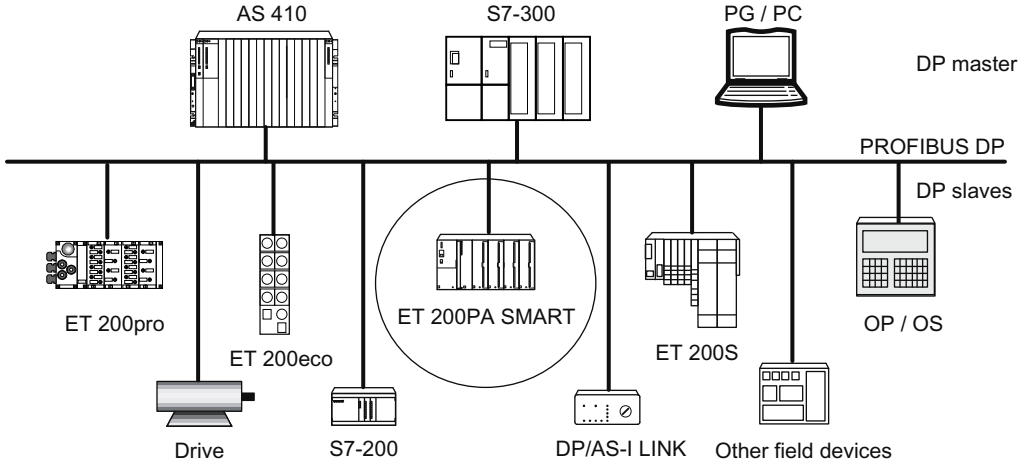

Figure 1-1 Typical structure of a PROFIBUS DP network

1.3 ET 200PA SMART Distributed I/O device

Definition

The ET 200PA SMART Distributed I/O device is a modular I/O device with IP20 degree of protection.

ET 200PA SMART has the technical setup of the S7-300 automation system and is made up of the IM 650 interface module and special ET 200PA SMART I/O modules.

Besides the ET 200PA SMART I/O modules, operation of standard I/O modules, HART analog modules and special FM and CP modules from the S7-300 series of modules is also possible in an ET 200PA SMART, provided these modules are approved for use in PCS 7.

You configure an ET 200PA SMART with a mounting rail and corresponding active bus modules.

ET 200PA SMART can only communicate with a DP master of an S7-400 PA CPU:

- CPU 410-5H as of firmware version 8.1
- CPU 410 SMART as of firmware version 8.1

You can configure an ET 200PA SMART station only in conjunction with PCS7 V8.1 or higher.

Configuration of an ET 200PA SMART

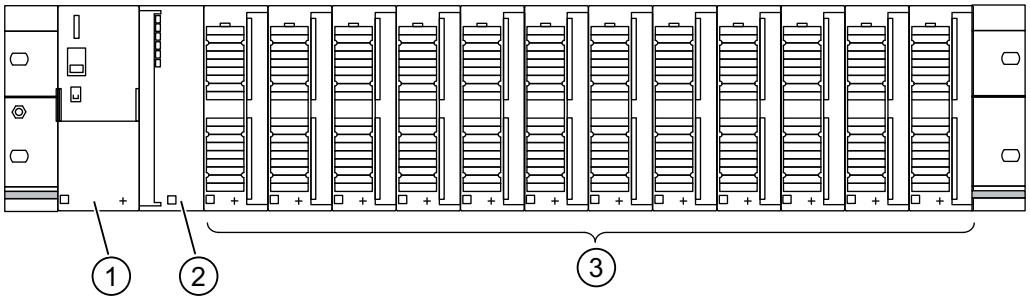

① Power supply module PS 307

② Interface module IM 650

③ Up to 12 I/O modules

Figure 1-2 Configuration of the ET 200PA SMART Distributed I/O device

Components

A series of components are available for configuring and commissioning the ET 200PA SMART. The most important components and their functions are listed in the following table:

Table 1-1 Components of an ET 200PA SMART

Component	Function	Diagram
Mounting rail for active bus module Accessories: • Shield connection element 6ES7390-5AA00-0AA0 • Active bus modules	... is the special rack for the ET 200PA SMART.	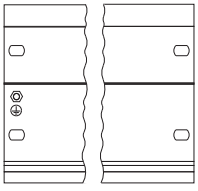
Active bus modules (BM) • BM IM/IM for redundancy with 2 IM 650 • BM PS/IM for PS 307; 2 A and IM 650 • BM 2x40 for two 40 mm wide I/O modules Accessories • Ex partition • Backplane bus and bus module cover	… provide the S7-300 backplane bus. In other words, if a module is missing, all the other modules can still be reached via the backplane bus. ...are required for the "Module replacement in runtime" and / or "Redundancy" functions	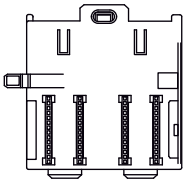
Power supply (PS) module Accessories: • Connecting comb 6ES7390-7BA00-0AA0	… converts the line voltage (120 / 230 V AC) to 24 V DC operating voltage for the supply of the ET 200PA SMART. ... can be used as load power supply for the DC 24 V load circuit.	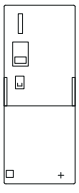

Component	Function	Diagram
IM 650 Accessories: • Slot number plate (for the assignment of slot numbers)	... is the interface module; links the ET 200PA SMART I/O modules to the CPU 410 via PROFIBUS DP; supplies the back-plane bus with operating voltage.	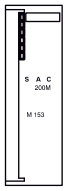
PROFIBUS cable with bus connector	... combines nodes of a PROFIBUS DP configuration with each other.	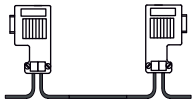
ET 200PA SMART I/O modules Accessories: • Front connector 20-pin 6ES7392-1AJ00-0AA0 or 6ES7392-1BJ00-0AA0 • Front connector 40-pin 6ES7392-1AM00-0AA0 or 6ES7392-1BM01-0AA0 • Front connector 20-pin for increased accuracy of ther-mocouple measurement 6ES7392-1AJ20-0AA0	Digital and analog modules of the ET 200PA SMART	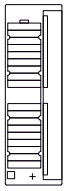
S7-300 I/O modules Accessories: • Front connector 20-pin 6ES7392-1AJ00-0AA0 or 6ES7392-1BJ00-0AA0 • Front connector 40-pin 6ES7392-1AM00-0AA0 or 6ES7392-1BM01-0AA0 • Front connector 20-pin for increased accuracy of ther-mocouple measurement 6ES7392-1AJ20-0AA0 • Labeling sheets for 20-pin connector 6ES7 650-8XA00-0AA0 • Labeling sheets for 40-pin connector 6ES7 650-8XA10-0AA0	… supported modules from the S7-300 series of modules	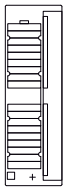

See also

Arrangement of the modules for the function "Change During Operation" and / or "Redundancy" (Page 20)

Configuring the electrical structure (Page 22)

Assignment planning 2

2.1 Configuration variants

Limit conditions

The IM 650 allows you to configure an ET 200PA SMART with input/output modules.

You can use the following I/O modules.

- ET 200PA SMART I/O modules
- All S7-300 standard I/O modules and HART analog modules that are approved for use in an ET 200PA SMART (see the list of released modules for PCS 7 (V8.1)).
- All counter modules and point-to-point couplings that are approved for use in an ET 200PA SMART (see the list of released modules for PCS 7 (V8.1)).

You can only operate the IM 650 interface module on the integrated PROFIBUS DP interface of a CPU 410-5H or a CPU 410 SMART with firmware version 8.1 or higher.

You may only configure an ET 200PA SMART station with active bus modules.

You can operate an ET 200PA SMART station both non-redundantly as well as redundantly:

For a non-redundant configuration, use an IM 650 on an active PS/IM bus module (6ES7650 8PA00-xAA0)

For a redundant configuration, use two IM 650 modules on an active IM/IM bus module (6ES7650 8PB00-xAA0)

2.2 Configuring the mechanical structure

2.2.1 Horizontal or vertical configuration

Possible configurations

You can mount the ET 200PA SMART horizontally or vertically.

Always arrange the power supply and IM 650 on the left or at the bottom.

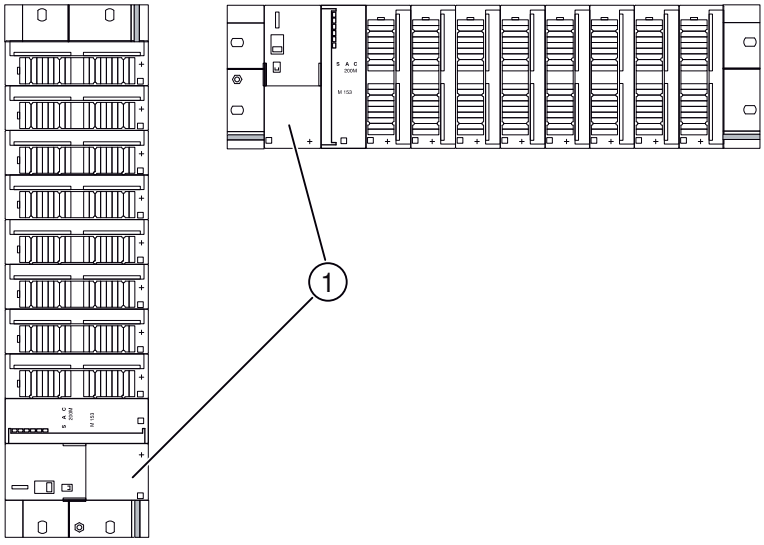

Figure 2-1 Horizontal and vertical mounting of an ET 200M

① Power supply, then IM 650

Permissible Ambient Temperature

The following ambient temperature ranges are permitted:

- In horizontal mounting position: From 0°C to 60 °C
- In vertical mounting position: From 0°C to 40 °C

2.2.2 Clearance Measurements

Rules

Maintain the minimum clearances for the following reasons:

- To ensure heat dissipation of the modules.
- To have room to attach and detach the modules
- To have room to route cables.

You can use a shield connection element to connect shielded lines directly to the mounting rail. This increases the installation height of the rack to 185 mm! You must nevertheless maintain the clearances of 40 mm.

Clearances

The following figure shows you the clearances from adjacent cable ducts, equipment, cabinet walls, etc., for an ET 200PA SMART configuration.

If you use a shield connection element, the clearances apply starting from the lower edge of the shield connection element.

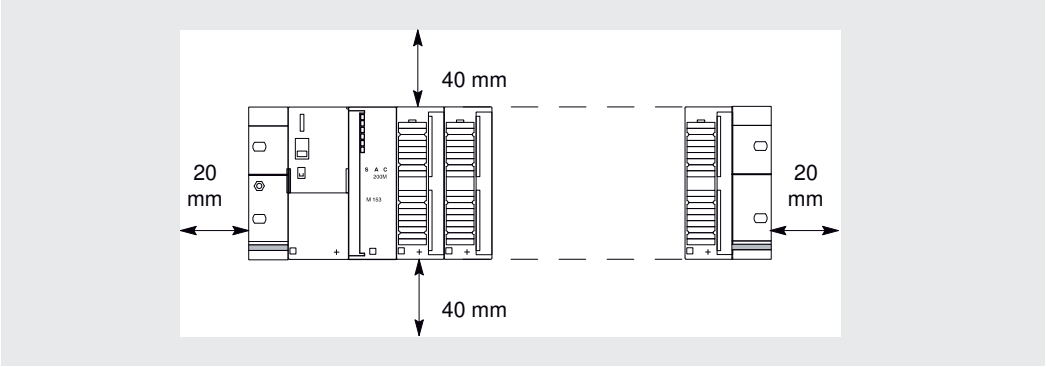

Figure 2-2 Clearances for an ET 200PA SMART configuration on a rack

Mounting dimensions of the modules

You can find the mounting dimensions of the ET 200PA SMART module in section Dimensional drawings of the signal modules (Page 252) of this manual.

You can find the mounting dimensions of the modules of the S7-300 range in the "S7-300 automation system, module specifications (http://support.automation.siemens.com/WW/view/en/8859629)" reference manual.

The mounting dimensions of the IM 650 interface modules can be found in section "Technical specifications of the IM 650 (Page 118)".

Lengths of the mounting rails

Depending on your configuration, you can use the following mounting rails:

Mounting rail for mounting of active bus modules	Usable length for modules	Remark
482.6 mm 530 mm 620 mm	450 mm 480 mm 580 mm	Comes with fixing holes.
2000 mm	Cut to length required	Fixing holes have to be drilled.

See also

Connecting shielded cables via a shield connecting element (Page 49)

Installing the DIN rail (Page 32)

2.2.3 Arrangement of the modules for the function "Change During Operation" and / or "Redundancy"

Arrangement rules

The following rules apply to the arrangement of the modules in an ET 200PA SMART:

- An ET 200PA SMART must be mounted on one rack only (mounting rail). It is not permitted to use interface modules to connect to other racks.
- You can plug a maximum of 12 modules to the right of the IM 650.
- You must plug the IM 650 and all modules into active bus modules.

Note

The active bus modules 6ES7650 8PA00-xAA0 and 6ES7650 8PB00-xAA0 have yellow markings for easier identification. The purpose of these markings is to indicate that only IM 650 interface modules may be plugged into these bus modules.

- Use the mounting rails for "Module replacement in runtime" (only these allow mounting of the active bus modules).
- Close unused slots with the backplane bus cover. Close the last bus module with the bus module cover. The bus module cover is included with the bus module BM PS/IM or BM IM/IM. The backplane bus cover has to be ordered.

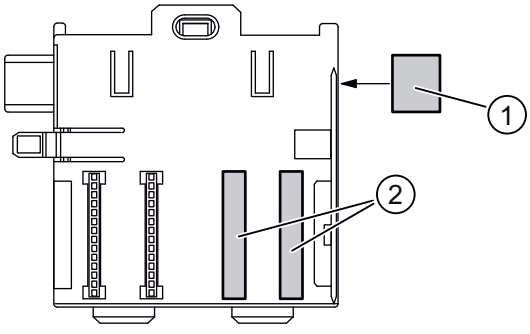

① Bus module cover

② Backplane bus cover

Figure 2-3 Example: Bus module 2 x 40 (6ES7 650 8PC00-0AA0)

- To use the ET 200PA SMART in the intrinsically safe area, use the Ex partition - preferably between the modules in the intrinsically safe area and the modules in the non-intrinsically safe area.

Restrictions

Use of the high-accuracy time stamp (1 ms accuracy) is only possible with 8 modules. In the ET 200PA SMART, you may use a maximum of 8 input modules after the IM 650 interface module for this.

The time stamp is only possible for input modules series of modules from the S7-300 series of modules. Signals of ET 200PA SMART input modules cannot be time-stamped.

Possible configurations

The length of the mounting rail determines how many active bus modules can be plugged.

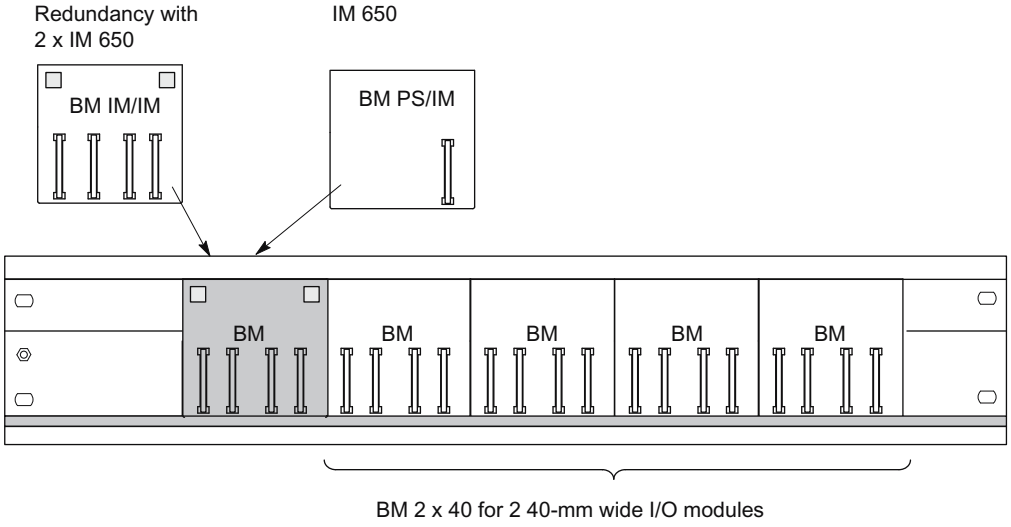

Figure 2-4 Configuration with active bus modules

Placement of the PS 307 power supply modules

Redundancy with 2 x IM 650	If you are using the 530 mm mounting rail, place the BM IM/IM in the rightmost latched position of the two latched positions on the rail Then you can mount either 2 x PS 307; 2A or 1 x PS 307; 5A on the rail to the left of the BM IM/IM. Otherwise you must mount the power supply modules on a separate S7 standard mounting rail. Recommendation: each IM 650 should have its own PS.
	PS 307; 2A fits next to the IM 650 on the BM PS/IM. PS 307; 5A and 10A do not fit on the BM PS/IM. You must mount these on a separate S7 standard mounting rail.

2.3 Configuring the electrical structure

2.3.1 General rules and regulations for operating an ET 200PA SMART

Introduction

Depending on the particular area of application, as a component of a plant or system the ET 200PA SMART requires adherence to specific rules and specifications.

Observe the safety and accident prevention regulations that are applicable to specific application cases.

This section provides an overview of the most important rules you must follow for safe integration of your ET 200PA SMART in a plant or system.

EMERGENCY STOP devices

EMERGENCY STOP devices that conform to IEC 60204 "Safety of machinery – electrical equipment of machines" must remain effective in all operating modes of the plant or system.

Startup of the system after certain events

The following table identifies situations you must pay attention to when the system starts up after the occurrence of certain events.

If ...	Then ...
• Start-up after voltage dip or failure • Startup of the ET 200PA SMART after interruption of bus communication	Dangerous operating states must not occur. If necessary, the EMERGENCY STOP must be forced!
• Start-up after releasing the EMERGENCY STOP device • Startup of the ET 200PA SMART without the DP master addressing the ET 200PA SMART	There must not be an uncontrolled or undefined start-up.

Note on radio interference radiation

When several electronic components are used within a control cabinet, their radio interference radiation may overlap. As a result, the permissible radio interference field strength in the overall configuration may be exceeded.

Tip: Keep such modules as far away from each other as possible, if necessary use shielded cables or filters in the supply cables or control cabinets that are impervious to HF.

Line voltage

The following table indicates requirements to be observed for the line voltage.

In the case of ...	then ...
Stationary plants or systems without all-pole line voltage disconnect switch	A line voltage disconnect switch or a fuse must be present in the building installation system
Load power supplies, power supply modules	The rated voltage range setting must correspond to the line voltage at the site
All power circuits of ET 200PA SMART	The fluctuation/deviation of the input/load voltage from the rated value must lie within the permissible tolerance (refer to Technical Specifications of the ET 200PA SMART modules or S7-300 modules)

24 V DC supply

The following table indicates requirements to be observed for the 24 V supply.

In the case of ...	then ...	
Buildings	External lightning protection must be ensured	Provide lightening protection measures (e.g. lightening protection units)
24 V DC supply cables, signal lines	Internal lightning protection must be ensured	
24 V supply	Safety extra-low voltage with safe electrical isolation	

Protection from external electrical influences

The following table indicates requirements to be observed for protection from electrical influences or faults.

In the case of ...	then ...
All plants or systems in which the ET 200PA SMART is integrated	Connection of the plant or system to the protective conductor must be ensured for discharge of electromagnetic interference.
Connection, signal and bus lines	Correct cabling and installation must be ensured.
Signal and bus lines	It must be ensured that a break of a line or conductor strand does not result in undefined states of the plant or system.

Rules for current consumption and power loss of an ET 200PA SMART

For their operation, the ET 200PA SMART modules and S7-300 modules draw the power they need from the backplane bus as well as, if necessary, from an external load power supply.

- The current consumption of all modules from the backplane bus must **not** exceed the amount of current that the IM 650 can supply to the backplane bus.
- The PS 307 power supply is dependent on the current consumption from the 24 V load power supply; this is the result of the total of the current consumption of the signal modules and all other connected loads.
- The power loss of **all** the components in a cabinet must not exceed the maximum thermal rating of the cabinet.

Note

When planning the dimensions of the cabinet, make sure that the temperature in the cabinet does not exceed the permitted maximum of 60 °C even when the temperature outside the cabinet is high.

You can find the values for the current consumption and power loss of a module in the technical specifications of the relevant modules.

2.3.2 Operation of the ET 200PA SMART with process I/O on a grounded supply

The following provides information on the overall configuration of an ET 200PA SMART on a grounded supply (TN-S system). The topics covered here are:

- Disconnecting devices, short-circuit and overload protection in accordance with DIN VDE 0100 and DIN VDE 0113
- Load power supplies and load circuits

Grounded supply

With grounded supplies, the neutral conductor of the supply system is grounded. A single ground fault between a live conductor and ground or a grounded part of the plant triggers activation of the disconnecting devices.

Components and protective measures

A variety of components and protective measures are prescribed for setting up a complete plant. The nature of the components and the extent to which the protective measures are binding depends on which DIN VDE directive applies to your plant configuration. The following table refers to the two following figures.

Table 2-1 DIN VDE directives for the configuration of a controller

Comparisons ...	Reference to figure	DIN VDE 0100	DIN VDE 0113
Disconnecting devices for controller, transducers and final controlling elements	(1)	… part 460: Main switch	… part 1: Disconnector
Short-circuit and overload protection: in groups for transducers and final controlling elements	(2)	… part 725: Single-pole fusing of circuits	… part 1: • For grounded secondary circuit: **single-pole** fusing • otherwise: **all-pole** fusing
Load power supply for AC load circuits with more than five electromagnetic equipment items	(3)	Galvanic isolation with transformers **recommended**	Galvanic isolation with transformers **required**

Properties of load power supplies

The load power supply supplies input and output circuits (load circuits) as well as sensors and actuators. The properties of load power supplies that are required in specific application cases are listed below.

Properties of load power supply	required for ...	Remarks
Safer (electrical) isolation	Modules that must be supplied with voltages ≤ 60 V DC or ≤ 25 V AC	The PS 307 power supplies as well as the Siemens load power supplies of the 6EP1 series have this property.
	24 V DC load circuits	
Tolerances of the output voltage:		In the case of significant ripple of the output voltage, we recommend using a supporting capacitor. Rating: 200 µF per 1 A load current (with bridge rectification).
20.4 V to 28.8 V	24 V DC load circuits	
40.8 V to 57.6 V	48 V DC load circuits	
51 V to 72 V	60 V DC load circuits	

Rule: ground the load circuits

The load circuits should be grounded.

The common reference potential (ground) ensures correct operational reliability. Provide a disconnectable connection to the protective conductor at the external power supply (terminal L- or M) or the isolation transformer (position ④ in the following figure). In the event of power distribution problems, this measure makes it easier for you to localize ground faults.

ET 200PA SMART in the overall configuration

The following figure shows the position of the ET 200PA SMART in the overall configuration (load power supply and grounding concept) with supply from a TN-S system.

Note: The arrangement of the supply connections shown does not correspond to the actual arrangement; it was chosen to give you a clear overview.

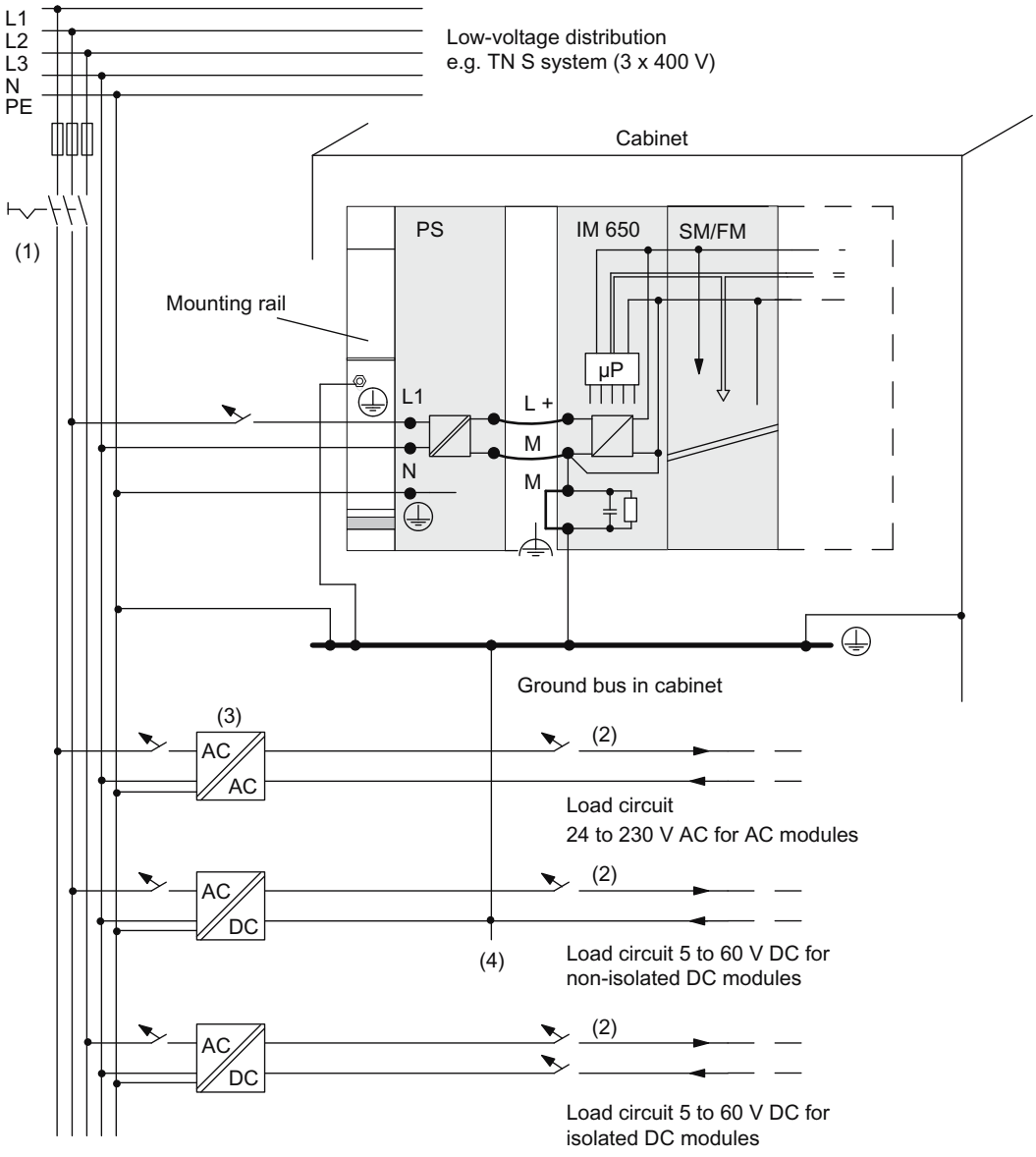

Figure 2-5 Operating ET 200PA SMART modules or S7-300 modules from grounded supply

ET 200PA SMART with load power supply from PS 307

The following figure shows the position of the ET 200PA SMART in the overall configuration (load power supply and grounding concept) with supply from a TN-S system.

Besides the IM 650, the PS 307 also supplies the load circuit for the 24 V DC modules.

Note: The arrangement of the supply connections shown does not correspond to the actual arrangement; it was chosen to give you a clear overview.

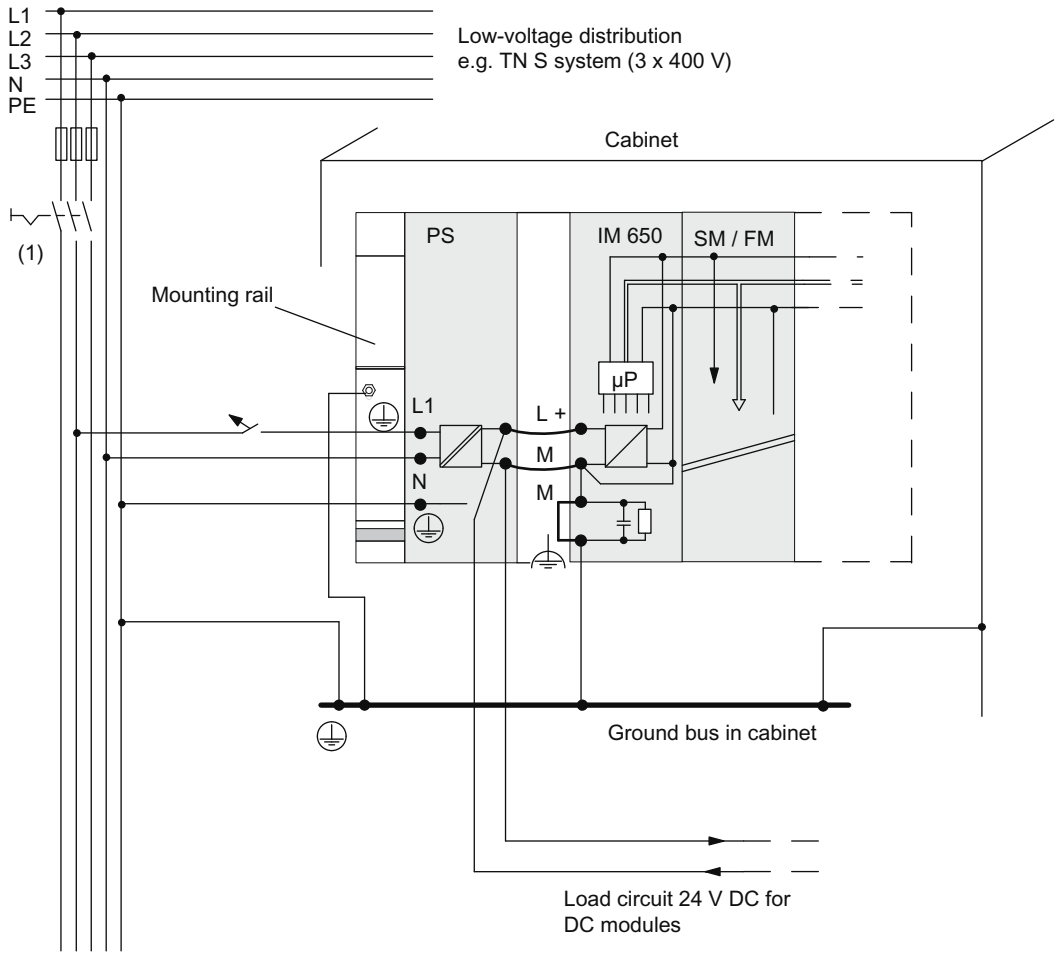

Figure 2-6 Operating ET 200PA SMART modules or S7-300 modules from PS 307

2.3.3 Configuration of the ET 200PA SMART with ungrounded reference potential

In the configuration of the ET 200PA SMART with ungrounded reference potential, the occurring interference currents are discharged to the protective conductor via an RC network that is integrated in the IM 650 (see following figure).

Application

In extensive plants, it may be necessary, e.g. for purposes of ground fault monitoring, to configure the ET 200PA SMART with ungrounded reference potential. This is the case, for example, in the chemical industry or in power stations.

Connection diagram

The following figure shows the configuration of an ET 200PA SMART with IM 650 and ungrounded reference potential. If you don´t want to ground the reference potential, then you must **remove the jumper on the IM 650 between the M and functional ground terminals**. When the jumper is removed, the reference potential of the ET 200PA SMART is connected internally to the protective conductor via an RC combination and via the mounting rail. This way, high-frequency interference currents are discharged and static charges are prevented.

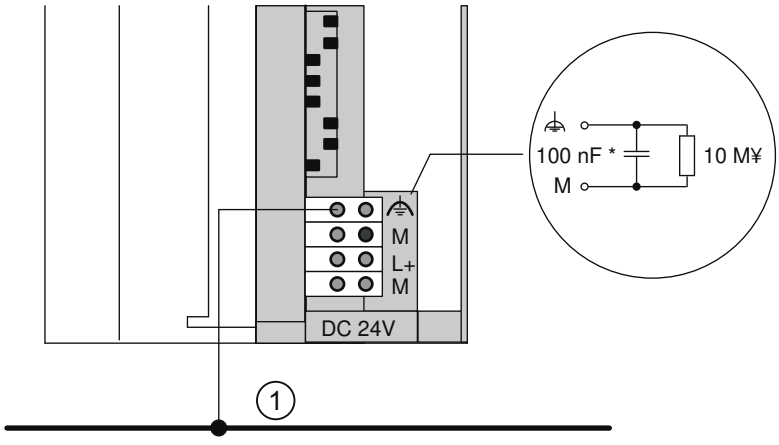

Figure 2-7 Configuration of an ET 200PA SMART with ungrounded reference potential

① Ground bus

Power supplies

When using power supplies, ensure that the secondary winding is not connected to the protective conductor. We recommend use of the PS 307 power supply module.

Filtering the 24 V DC supply

If, with a configuration with ungrounded reference potential, you supply the IM 650 from a battery, you must suppress interference in the 24 V DC power supply. To do this, use a Siemens supply cable filter, e.g. B84102-K40.

Isolation monitoring

If, on account of double faults, dangerous situations could occur, then you must provide isolation monitoring.

2.3.4 Configuration of the ET 200PA SMART with isolated modules

Definition

In a configuration with isolated modules, the reference potentials are electrically isolated from the control circuit ($M_{internal}$) and load circuit ($M_{external}$) (refer also to the following figure).

Application area

You use electrically isolated modules for:

- all AC load circuits
- DC load circuits with separate reference potential, e.g.
  - DC load circuits, the encoders for which have different reference potentials (e.g. if grounded encoders are used far away from the controller and an equipotential bonding isn´t possible)
  - DC load circuits, the positive pole (L +) of which is grounded (battery circuits).

Isolated modules and grounding concept

You can use isolated modules irrespective of whether of not the reference potential of the ET 200PA SMART is grounded.

Configuration with isolated modules

The following figure shows the potential relations of an ET 200PA SMART configuration with isolated input and output modules.

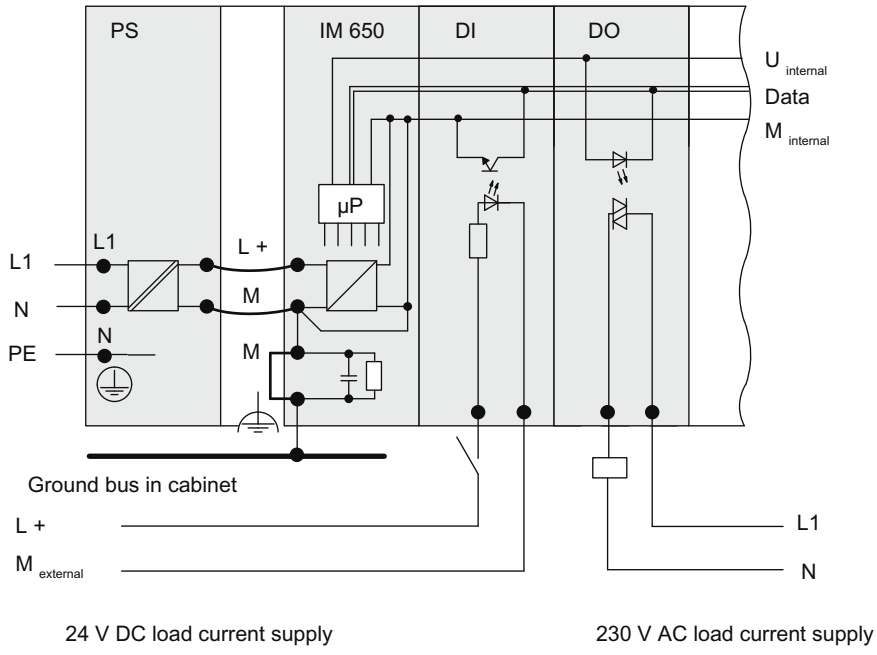

Figure 2-8 Simplified representation for the configuration with isolated modules

2.3.5 Configuration of the ET 200PA SMART with non-isolated modules

Potential relations in the configuration with non-isolated modules

The following figure shows the potential relations of an ET 200PA SMART configuration with grounded reference potential using the example of the non-isolated analog input/output module SM 334; AI 4/AO 2 x 8/8Bit from the S7-300 series of modules.

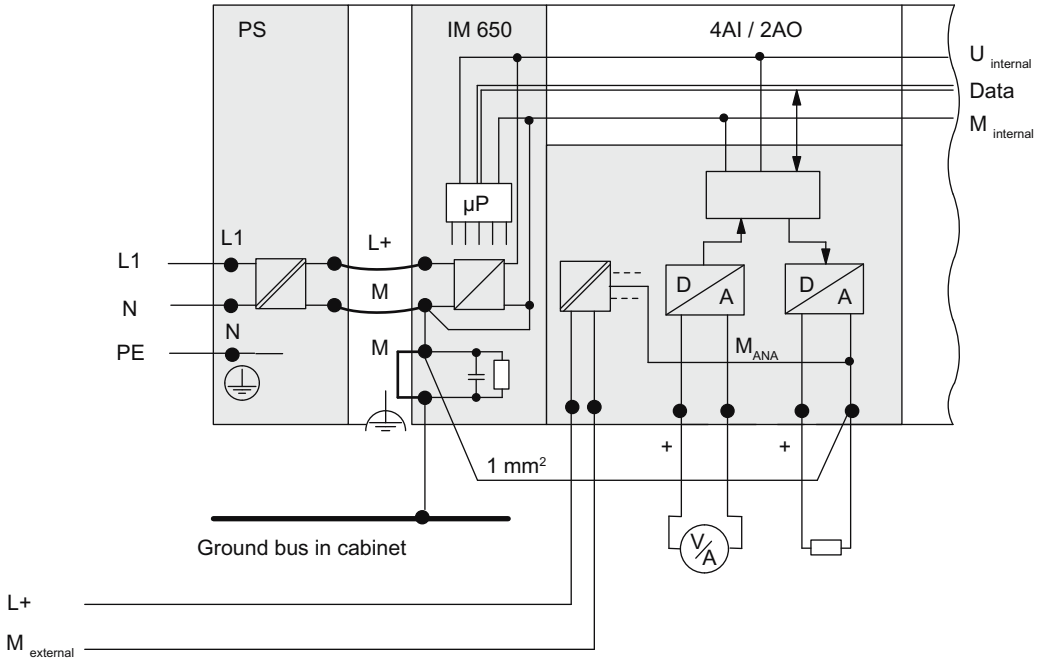

Figure 2-9 Potential relations in the configuration with the non-isolated analog input/output module SM 334; AI 4/AO 2 x 8/8Bit

Installation 3

3.1 Overview

Introduction

In this section; we will show you how to prepare the ET 200PA SMART components for installation and how to install them.

The installation is carried out exclusively with active bus modules.

For the installation of an ET 200PA SMART, you must also take into account the mechanical and electrical installation. You can find information on this in section "Assignment planning (Page 17)".

Open equipment

The modules of an ET 200PA SMART are open equipment. That means you must install the ET 200PA SMART in enclosures, cabinets, or electrical operating areas. These may only be accessible by means of a key or a tool. Only trained or authorized personnel are permitted to have access to the enclosures, cabinets or electrical operating areas.

3.2 Installation

3.2.1 Mounting Sequence

Installation steps

Depending on the desired configuration, you have to carry out the following steps consecutively for the installation:

1. Installing the mounting rail
2. Installing active bus modules
3. Installing modules
4. Performing the final work

Detailed information on the individual installation steps can be found in the following sections.

3.2.2 Installing the DIN rail

Mounting rail for active bus modules

For mounting an ET 200 PA SMART, you use the associated mounting rails with article no. 6ES7195-1Gxx0-0XA0. Only these rails can accommodate the active bus modules.

For the dimensions of the mounting rails for active bus modules, refer to the section "Installing active bus modules and modules (Page 35)".

Do you want to install a 2-meter mounting rail?

If not, you can skip this section and read on from "Dimension drawing for fixing holes".

If you do, you must prepare the 2-meter mounting rail for installation. Proceed as follows:

1. Shorten the 2-meter mounting rail to the required length.
2. Mark out:
   – four holes for fixing screws (dimension: refer to the following figure and following table)
   – One hole to take the fixing screw for the protective conductor.
3. Is the mounting rail longer than 830 mm?
   – If not: No further steps have to be taken.
   – If so: Then, in order to stabilize the mounting rail you must provide additional holes for extra fixing screws. Score out these extra holes along the groove in the central area of the mounting rail (refer to following figure). These additional holes should be at approx. 500 mm intervals.
4. Drill the marked holes with a diameter of 6.5 $^{+0.2}$ mm for M6 screws.
5. Screw in an M6 screw to fix the protective conductor.

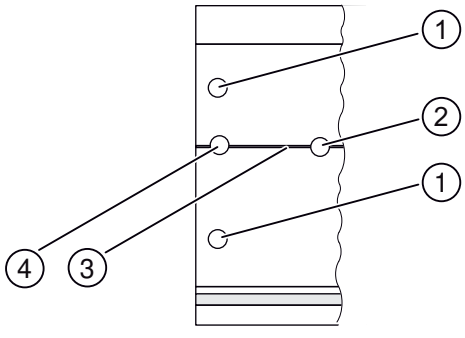

① Hole for fixing screw
② Drilled hole for extra fixing screw
③ Groove for drilling additional holes for fixing screws
④ Hole for protective conductor connection

Figure 3-1 Fixing holes of the 2-meter mounting rail

Dimension drawing for fixing holes

The dimensions for the fixing holes of the mounting rail are shown in the following table.

Table 3-1 Fixing holes for mounting rails

Mounting rail		
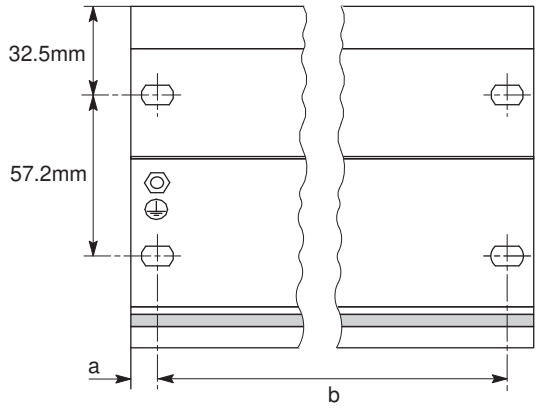		
Length of mounting rail	Distance a	Distance b
482.6 mm	8.3 mm	466 mm
530 mm	15 mm	500 mm
620 mm	15 mm	590 mm

2-meter mounting rail
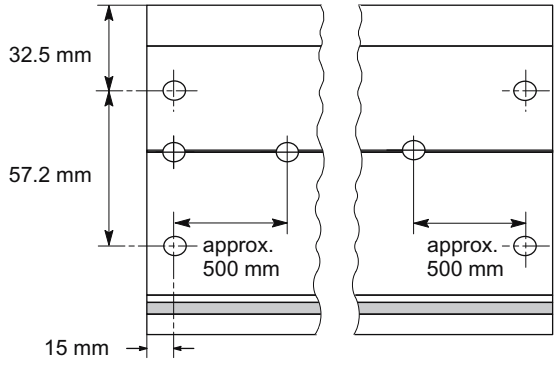

Fixing screws

You have a choice of the following screw types for fixing the mounting rail.

For …	you can use ...	Explanation
Outer fixing screws	Cylinder head screw M6 in accordance with ISO 1207 / ISO 1580 (DIN 84 / DIN 85)	Choose a suitable screw length for your configuration. You also require washers 6.4 in accordance with ISO 7092 (DIN 433).
	Hexagon head screw M6 in accordance with ISO 4017 (DIN 4017)	
Additional fixing screw (only 2-meter mounting rail)	Cylinder head screw M6 in accordance with ISO 1207 / ISO 1580 (DIN 84 / DIN 85)	

Installing the mounting rail

To install the mounting rail, proceed as follows:

1. Choose a position for the rail that leaves enough room for installation and heat dissipation of the modules. Observe the minimum clearances of at least 40 mm above and below the mounting rail.
2. Screw the mounting rail to the base (screw size: M6).
   Is this base a grounded metallic plate or a grounded device supporting plate?
   If not: No particular steps are required.
   If so: Ensure there is a low-impedance connection between the mounting rail and the base. In the case of painted or anodized metals, for instance, use a suitable contacting agent or contact washers.
3. Connect the mounting rail to the protective conductor. An M6 protective conductor screw is provided for this purpose on the mounting rail.
   Minimum cross-section of the cable for the protective conductor: 10 mm^2.

   Note

   Ensure that your connection to the protective conductor is low-impedance (see the following figure). If the ET 200PA SMART is mounted on a movable rack, for example, you must provide a flexible cable for the protective conductor.

Protective conductor connection

The following figure shows you how to realize the protective conductor connection on the mounting rail.

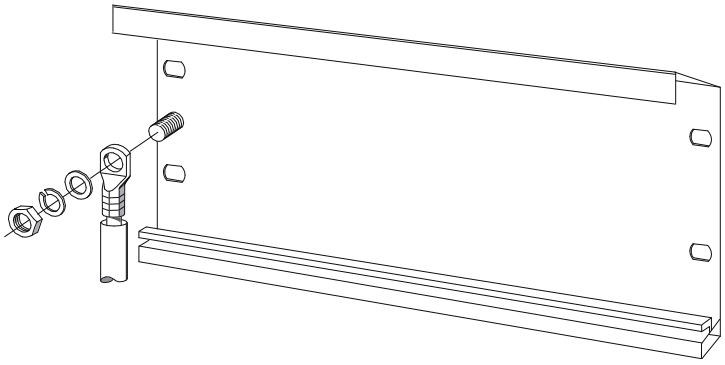

Figure 3-2 Protective conductor connection on the mounting rail

See also

Clearance Measurements (Page 18)

3.2.3 Installing active bus modules and modules

Installing bus modules and modules

To install the active bus modules and modules, proceed as follows:

Only install the active bus modules in a de-energized state.

1. Hook the lower edge of the bus module BM PS/IM or BM IM/IM in the rail, and then press the module into the rail (a) and slide it to the left up to the latched position (b).

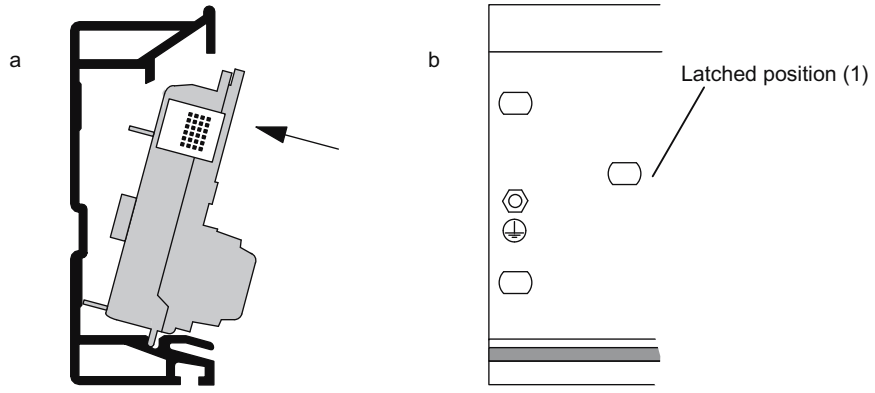

   Are you using the 530 mm mounting rail and the BM IM/IM?
   If you position the BM IM/IM in the rightmost of the two latched positions (1), you can also install either 2 x PS 307; 2A or 1 x PS 307; 5A to the left of the BM IM/IM.

2. Hook the next bus module (bus module BM 2 x 40) into the rail and press it onto the rail. Slide it towards the left bus module, so that the module connector has contact.
3. Are you installing the ET 200PA SMART in intrinsically safe areas?
   If yes, then you require the Ex partition between the modules in the intrinsically safe and the non-intrinsically safe areas. To do this, simply insert the Ex partition on the right lateral guide of the bus module.
4. Hook the modules into the rail and swing them down into place. Use the side guides of the bus modules to do so. When you screw in the modules, you fix the bus module to the mounting rail at the same time
5. Plug the bus module cover onto the last bus module. If there is a slot with no module, also plug in the backplane bus cover on the unoccupied slot.

Mounting rail for active bus module

The figure below shows the dimension drawing of the mounting rail with active bus module, ET 200PA SMART module and Ex partition. The mounting rail is 482.6 mm or 530 mm long.

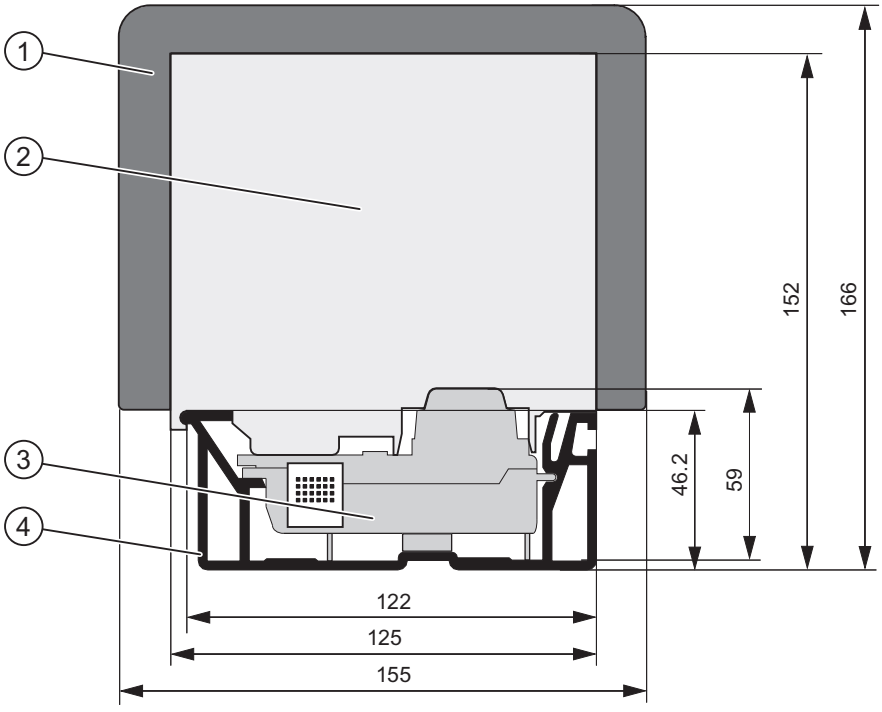

① Ex partition
② ET 200 PA SMART module
③ Active bus module
④ Mounting rail for the "Insertion and Removal" function

Plugging in output modules in a "running" ET 200PA SMART configuration

NOTICE
Uncontrolled system states Uncontrolled system states may cause property damage. Plugging in output modules can lead to uncontrolled system states! This also applies if you insert input/output modules tilted on the bus module. When plugging in an output module, the outputs set by the user program become active immediately! For pulling out an output module, set the outputs to "0" in the user program. If modules are pulled and plugged incorrectly, neighboring modules may be disturbed through the backplane bus.

3.2.4 After installation

Assigning slot numbers

After installation, you can assign a slot number to each module. The following table illustrates the assignment of the slots.

Table 3-2 Slot numbers

Slot number	Module	Remark
1	Power supply (PS) [1]	–
2	IM 650	–
3	–	Not applicable
4	Module 1	Directly to the right of IM 650
5	Module 2	–
…	…	–
15	Module 12	–
[1] The use of the power supply is optional.		

Unoccupied slots

In a configuration of an ET 200PA SMART with active bus modules, if slots are unoccupied (e.g. reserved for later use), you must leave these slots free when configuring!

Attaching slot numbers

The following figure shows how you must attach the slot numbers. The slot number plates are provided with the IM 650.

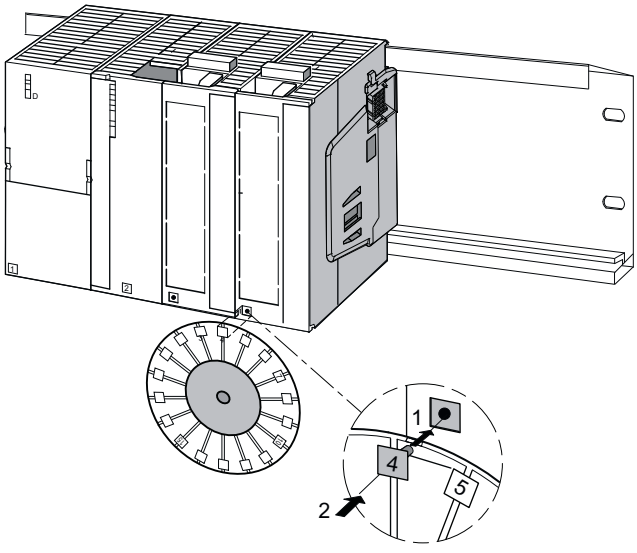

Figure 3-3 Attaching the slot numbers to the modules.

3.3 Setting the PROFIBUS address

Definition

Each bus node must receive a PROFIBUS address to identify it uniquely on the PROFIBUS DP.

Rules

The following rules apply for the PROFIBUS address of the IM 650:

- Permissible PROFIBUS addresses are: 1 to 125.
- Each PROFIBUS address can be allocated only once on the bus.

Setting the PROFIBUS address

1. Set the PROFIBUS address using a screwdriver and with the door open.
   The PROFIBUS address is the addition of the switch that is located on the right ("ON" position).

Example: Setting the PROFIBUS address

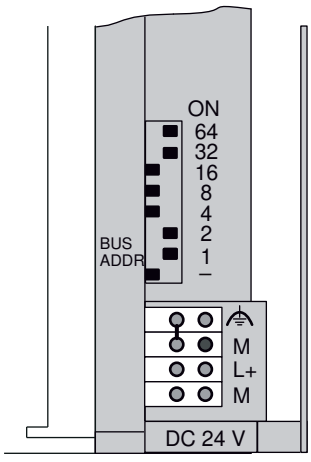

PROFIBUS address:

64 + 32 + 2 + 1 = 99

The switch "-" has no function.

Changing the PROFIBUS address

You can change the set PROFIBUS address at any time. However, the IM 650 adopts the new PROFIBUS address only after a switch off / switch on of the 24 V DC supply.

Connecting 4

4.1 Overview

Introduction

For the configuration of an ET 200PA SMART, you must also take into account the mechanical and electrical configuration. Information on this be found in section "Assignment planning (Page 17)".

Basic rules

In view of the many and varied applications of an ET 200PA SMART, this section can only describe the basic rules for the electrical configuration. You must observe these basic rules at a minimum in order to ensure trouble-free operation of the ET 200PA SMART.

4.2 Connecting PROFIBUS DP

4.2.1 Connecting the Bus Connector

Applicable bus connectors

To connect to the PROFIBUS DP it is preferable to use the following FastConnect bus connectors:

- Up to 12 MBaud, with vertical cable outlet
  - without PG socket (6ES7972-0BA50-0XA0)
  - with PG socket (6ES7972-0BB50-0XA0)
- Up to 12 MBaud, with diagonal cable outlet
  - without PG socket (6ES7972-0BA60-0XA0)
  - with PG socket (6ES7972-0BB60-0XA0)

These guarantee a fast and reliable wiring with FC bus cable

Of course you can also continue to use the conventional bus connector with screw-type connection technology:

- Up to 12 MBaud, with vertical cable outlet
  - without PG socket (6ES7972-0BA12-0XA0)
  - with PG socket (6ES7972-0BB12-0XA0)
- Up to 12 MBaud, with diagonal cable outlet
  - without PG socket (6ES7972-0BA41-0XA0)
  - with PG socket (6ES7972-0BB41-0XA0)

Connecting the bus connector

Proceed as follows to connect the bus connector:

1. Plug the bus connector into the IM 650.
2. Screw the bus connector into place on the IM 650.
3. If the bus connector is located at the start or end of a segment, you must connect the terminating resistor (switch setting "ON").
   Alternative: You use the PROFIBUS terminator as an active bus connector.
4. Lay the bus cable(s) in the space provided for the IM 650 to the right of the 24 V DC connecting terminal.

Ensure that the devices to which the terminating resistor is connected are always supplied with voltage during power-up and operation.

4.3 Wiring the power supply and modules

4.3.1 Wiring rules

Note

For a configuration, provide longer cables to the front connectors (refer to section "Wiring front connectors of the signal modules (Page 45)").

Table 4-1 Wiring rules for the power supply and the IM 650

Wiring rules for ...		Power supply and IM 650
Connectable cable cross-sections for solid cables		No
Connectable cable cross-sections for flexible cables	without end sleeve	0.25 to 2.5 mm^2
	with end sleeve	0.25 to 1.5 mm^2
Number of cables per connection		1 or a combination of 2 conductors up to 1.5 mm^2 (total) in a common end sleeve

Wiring rules for ...		Power supply and IM 650
Maximum external diameter of the cable isolation		Ø 3.8 mm
Isolation stripping length of the cables	without isolation collar	11 mm
	with isolation collar	11 mm
End sleeves in accordance with DIN 46228	without isolation collar	Form A, 10 to 12 mm long
	with isolation collar	Form E, up to 12 mm long

Table 4-2 Wiring rules for front connectors of modules

Wiring rules for ...		Front connectors of modules (screw-type and spring-loaded terminals)	
		20-pin	40-pin
Connectable cable cross-sections for solid cables		No	No
Connectable cable cross-sections for flexible cables	without end sleeve	0.25 to 1.5 mm^2	0.14 to 0.75 mm^2
	with end sleeve	0.25 to 1.5 mm^2	0.14 to 0.75 mm^2
Number of cables per connection		1 or a combination of 2 conductors up to 1.5 mm^2 (total) in a common end sleeve	1 or combination of 2 conductors up to 0.75 mm^2 (total) in a common end sleeve
Maximum external diameter of the cable isolation		Ø 3.1 mm max. 20 cables	Ø 2.0 mm max. 40 cables
Isolation stripping length of the cables	without isolation collar	6 mm	6 mm
	with isolation collar	6 mm	6 mm
End sleeves in accordance with DIN 46228	without isolation collar	Form A, 5 to 7 mm long	Form A, 5 to 7 mm long
	with isolation collar	Form E, up to 6 mm long	Form E, up to 6 mm long

4.3.2 Wiring the power supply and IM 650

Power cables

Use flexible cables to wire the power supply.

If you use only one cable per connection, an end sleeve is not required.

Connecting comb

Use the connecting comb to wire the PS 307 power supply module with the IM 650. The connecting comb comes with the power supply module.

Further 24 V connections

On the PS 307 power supply, 24 V connections are still available, by means of the connecting comb, for connecting the supply of the ET 200PA SMART modules.

Wiring the 24 V connections with redundant configuration with 2 x IM 650

NOTICE

Property damage resulting from short-circuit

If, in a configuration for redundancy, you incorrectly connect the supply voltage L+ when wiring to the IM 650, this brings about a short-circuit via the ground terminal.
Reason: The two IM 650 modules have a shared ground cable via the BM IM/IM bus module.

- In configurations with ungrounded reference potential (jumper between M and functional ground removed, see figure in section "Configuration of the ET 200PA SMART with ungrounded reference potential (Page 27)"), in the case of a polarity reversal an internal electronic fuse trips, which regenerates after approx. 30 seconds.
- In configurations with grounded reference potential (jumper plugged between M and functional earth), in the case of a polarity reversal a short-circuit current results via this jumper and the functional ground.
  In doing so, the IM 650 is not damaged if a fuse designed in accordance with the cross-section of the connection cable is installed before the module.

Wiring the power supply and IM 650 with connecting comb

In order to wire the power supply module and IM 650, proceed as follows (refer to the following figure):

⚠ WARNING

Wiring only in de-energized state

Electric shock may result in death or bodily injury.

There is a risk of contacting live wires if the power supply module and any additional load current supplies are connected to the supply system.

Therefore, only wire the ET 200PA SMART in de-energized state.

1. Open the front doors of the PS 307 and the IM 650.
2. Undo the strain relief clamp on the PS 307.
3. Strip the isolation from the power cable (230 V / 120 V) and connect this to the PS 307.
4. Screw the strain relief clamp in place again.

5. Insert the connecting comb screw it into place.
6. Close the front doors.

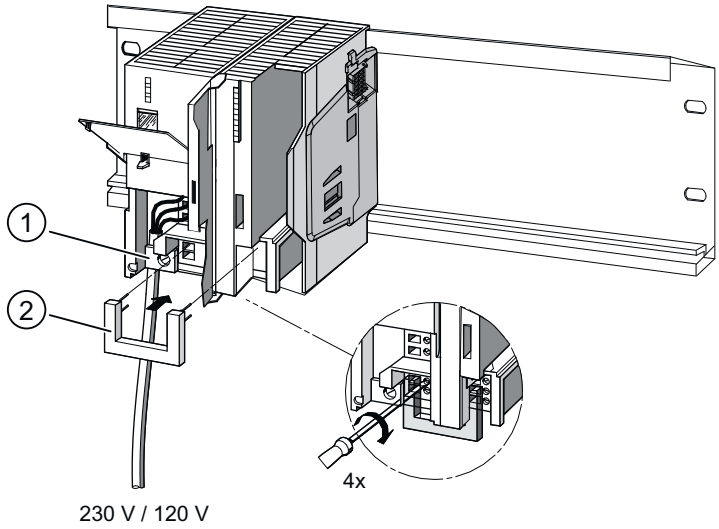

Figure 4-1 Wiring the PS 307 power supply module and IM 650 with connecting comb

① Strain relief
② Connecting comb

Setting the switch for the line voltage

Check that the switch for selecting the line voltage is set correctly for your line voltage. This switch is always factory-set to 230 V on the PS 307. To select another line voltage, do the following:

1. Remove the protective cap with a screwdriver.
2. Set the selector to the available line voltage.
3. Insert the protective cap back onto the switch opening.

See also

Wiring rules (Page 42)

4.3.3 Wiring front connectors of the signal modules

S7-300 Ex modules

For information on how to wire the S7 300 Ex-modules and what you must observe when wiring modules in the intrinsically safe area, refer to the "S7-300 Automation Systems, ET 200M Ex I/O Modules (http://support.automation.siemens.com/WW/view/en/1096709)" reference manual.

Cables

You can use flexible cables with cross-sections as specified in section "Wiring rules (Page 42)".

An end sleeve is not required.
If you use end sleeves, observe the specifications in section "Wiring rules (Page 42)".

Types of front connectors

The 20-pin and 40-pin front connectors are available in 2 types: spring-loaded terminals and screw-type terminals.

Spring-loaded terminals

The front connectors with spring-loaded terminals can be wired very easily: Insert the screwdriver vertically in the opening with the red opening mechanism, insert the cable in the associated terminal and then pull out the screwdriver.

Tip: There is a separate opening for test probes up to 2 mm in diameter to the left of the opening for the screwdriver.

Wiring

To enable problem-free removal and insertion of modules during operation of the ET 200PA SMART, we recommend that the wiring to the front connector be approximately 20 cm longer.

Preparing for wiring

⚠ WARNING
Wiring only in de-energized state Electric shock may result in death or bodily injury. There is a risk of contacting live wires if the power supply module and any additional load current supplies are connected to the supply system. Therefore, only wire the ET 200PA SMART in de-energized state.

To prepare for wiring, proceed as follows:

1. Open the front door.
2. Put the front connector in the wiring position.
   To do so, push the front connector into the signal module until it snaps into place. The front connector still protrudes from the module in this position.
   Advantage of the wiring position: Convenient wiring; in the wiring position a wired front connector has no contact with the module.
   The following figure shows you how to bring the front connector into wiring position.

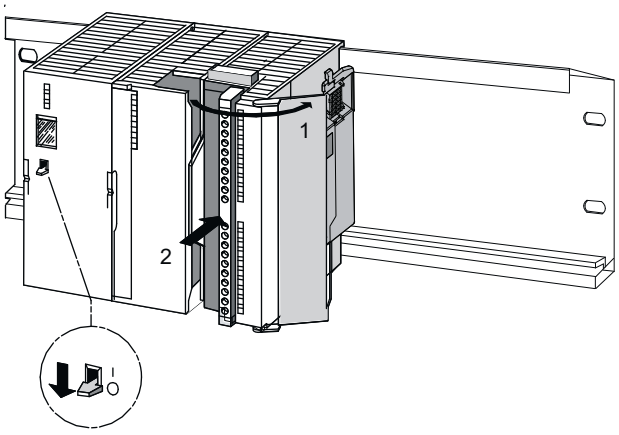

Figure 4-2 Bringing the front connector into the wiring position

3. Strip the isolation from the cables in accordance with the wiring rules.
4. When using end sleeves: Press the end sleeves and the cables together.

Wiring front connectors

Table 4-3 Wiring front connectors

Step	20-pin front connector	40-pin front connector
1.	Thread the strain relief for the cable string into the front connector.	–
2.	Do you want to bring the cables out at the bottom of the module?	
	If so:	
	Start with terminal 20 and wire the terminals in the sequence terminal 20, 19, ... until you get to 1.	Start with terminal 40 or 20 and continue to wire the terminals reciprocally, i.e. the terminals 39, 19, 38, 18, etc. until terminals 21 and 1.
	If not:	
	Start with terminal 1 and wire the terminals in the sequence terminal 1, 2, ... until you get to 20.	Start with terminal 1 or 21 and continue to wire the terminals reciprocally, i.e. the terminals 2, 22, 3, 23, etc. until terminals 20 and 40.
3.	Also tighten the screws of any terminals that are not wired.	
4.	–	Thread the provided strain relief for the cable string into the front connector.

Step	20-pin front connector	40-pin front connector
5.	Tighten the strain relief for the cable string. Press the retainer of the strain relief in and to the left; this will improve utilization of the available space.	
—	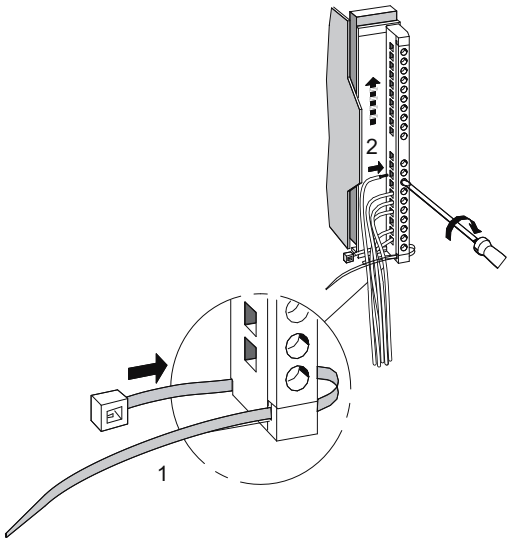	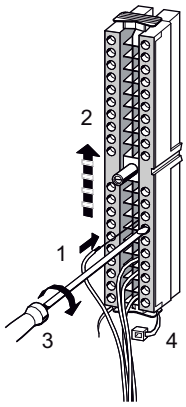

Preparing the signal module for operation

Table 4-4 Preparing the signal module for operation

Step	20-pin front connector	40-pin front connector
1.	Press down the unlocking button on the top of the module and, at the same time, push the front connector into its operating position on the module. When the front connector reaches its operating position, the unlocking button will snap back into the initial position.	Tighten the fixing screw to bring the front connector to its operating position.
2.	Close the front door.	
3.	Enter the addresses for identifying the individual channels on the labeling plate.	
4.	Slide the labeling plate into the front door.	
—	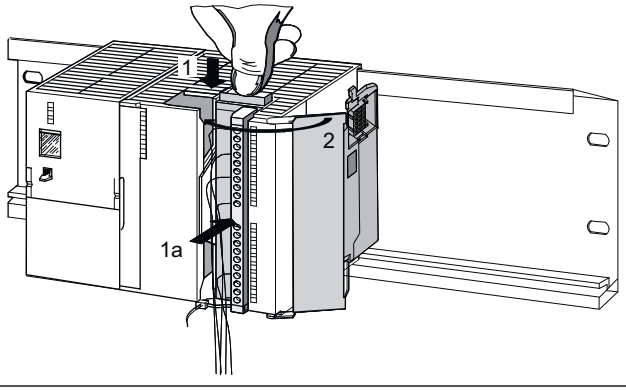	

Note

When the front connector is put in its operating position, a front connector coding engages in the front connector. The front connector then only fits this type of module. Make certain that the coding elements are present on the module so that the front connector coding is correct when the front connector is plugged in.

4.3.4 Connecting shielded cables via a shield connecting element

Introduction

This section tells you how to connect the shield of shielded signal lines to ground via a shield connection element. The connection to ground is achieved by direct contact between the shield connection element and the mounting rail.

Application

You can do the following easily with the shield connection element:

- Connect all shielded cables of ET 200PA SMART or modules from the S7-300 series of modules to ground
- Connect the bus cable to ground.

Design of the shield connection element

The shield connection element consists of the following parts:

- A fixing bracket with 2 threaded bolts for fixing to the mounting rail (6ES7390-5AA00-0AA0)
- The shield connection clamps

Depending on the cable cross-sections used, you must use the following shield connection clamp:

Table 4-5 Assignment of cable cross-sections and shield connection clamps

Cable and shield diameter	Shield connection clamp Article no.:
2 cables with in each case 2 to 6 mm shield diameter	6ES7390-5AB00-0AA0
1 cable with 3 to 8 mm shield diameter	6ES7390-5BA00-0AA0
1 cable with 4 to 13 mm shield diameter Bus cable	6ES7390-5CA00-0AA0

The shield connection element is 80 mm wide and provides space for two rows with four shield connection clamps each.

Installing the shield connection element

Install the shield connection element as follows:

1. Push the two threaded bolts of the fixing bracket into the guide on the underside of the mounting rail. Position the fixing bracket under the modules to be wired.
2. Screw the fixing bracket into place on the mounting rail.
3. A slotted web is arranged at the bottom side of the shield connection clamp. Place the shield connection clamp at this position onto the edge of the fixing bracket (see the figure).

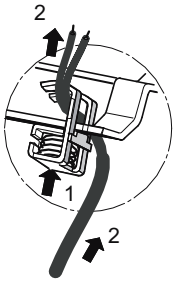

4. Press the shield connection clamps down and swing them into the desired position. You can attach up to 4 shield connection clamps on each of the two rows of the shield connection element.

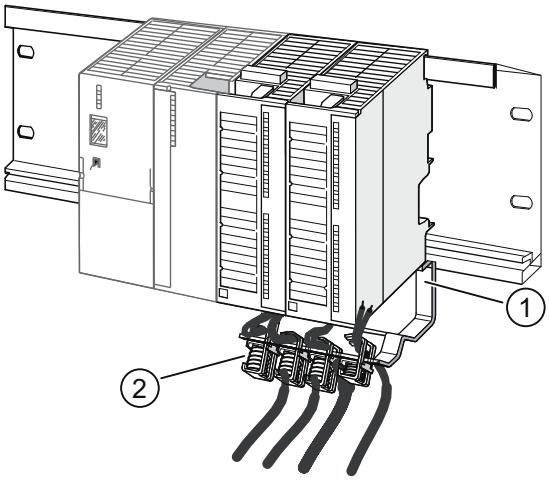

① Fixing bracket

② Shield connection clamps

Figure 4-3 Fitting the shielded 2-wire cables to the shield connection element

Fitting the cables

You can only clamp one or two shielded cables per shield connection clamp (see figure and table above). You clamp the cable at the stripped cable shield. There stripped length of the cable shield must be at least 20 mm. If you need more than four shield connection clamps, start the wiring on the back row of the shield connection element.

Note

Use a sufficiently long cable between the shield connection clamp and the front connector. This enables you to loosen the front connector without having to loosen the shield connection clamp, e.g., for repairs.

Commissioning 5

5.1 PROFIBUS DP

5.1.1 Commissioning the DP slave

Software requirements

Table 5-1 Software requirements for commissioning

Configuration software used	Version	Explanations
PCS 7	As of V 8.1	Configure the IM 650 from the hardware catalog of HW Config, Profile PCS7_V8.1 (ET 200PA SMART)

Requirements for commissioning

The following requirements must be met in order to commission the ET 200PA SMART:

- DP slave installed
- PROFIBUS address set on the DP slave
- Bus connector connected
- If the DP slave is located on the end of the segment, then the terminating resistor is connected to the DP slave.
- DP slave configured
- Supply voltage for DP master switched on
- Configuration downloaded to the DP master
- DP master switched to RUN operating state

Commissioning the DP slave

Commission the DP slave as follows:

1. Switch on the supply voltage for ET 200PA SMART.
2. If necessary, switch on the supply voltage for the load.

5.1.2 Startup of the IM 650

Declaration in the case of redundancy:

In a redundant configuration, the 2 plugged IM 650 modules start up independently. The following flowchart illustrates the startup of the IM 650 (a). For the IM 650 (b), the following flow chart applies with the designations reversed accordingly.

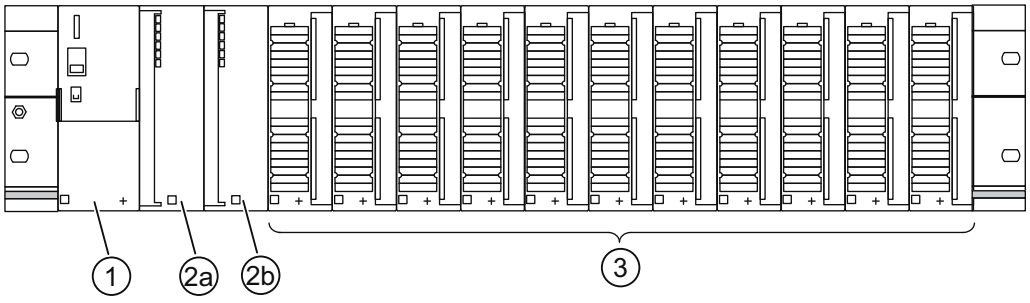

1	Power supply module
2a	IM 650 (a)
2b	IM 650 (b)
3	ET 200PA SMART I/O modules or modules from the S7-300 series of modules

Startup of the IM 650

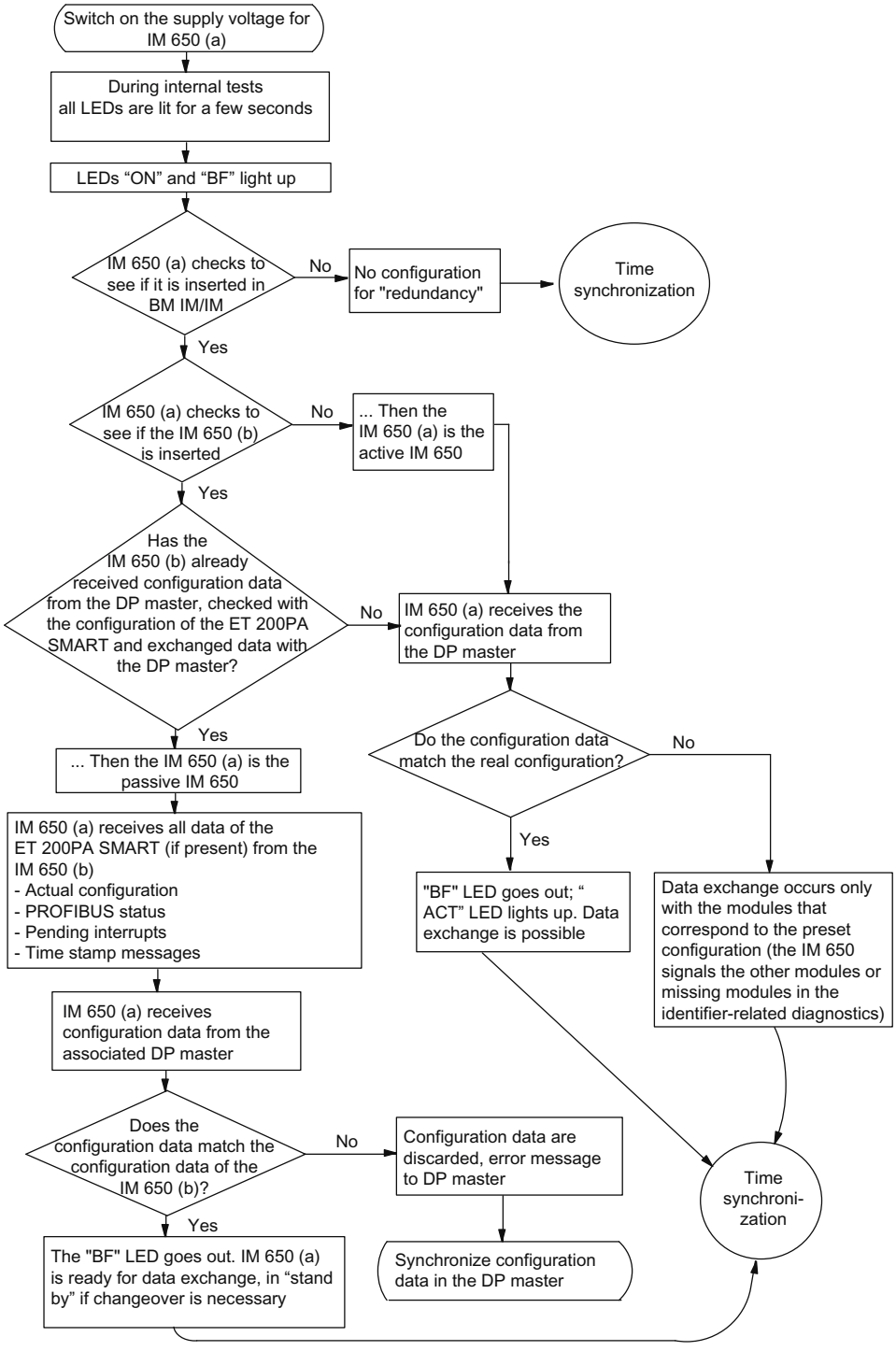

Figure 5-1 Startup of the IM 650

Startup for time synchronization / time stamping of the signal changes

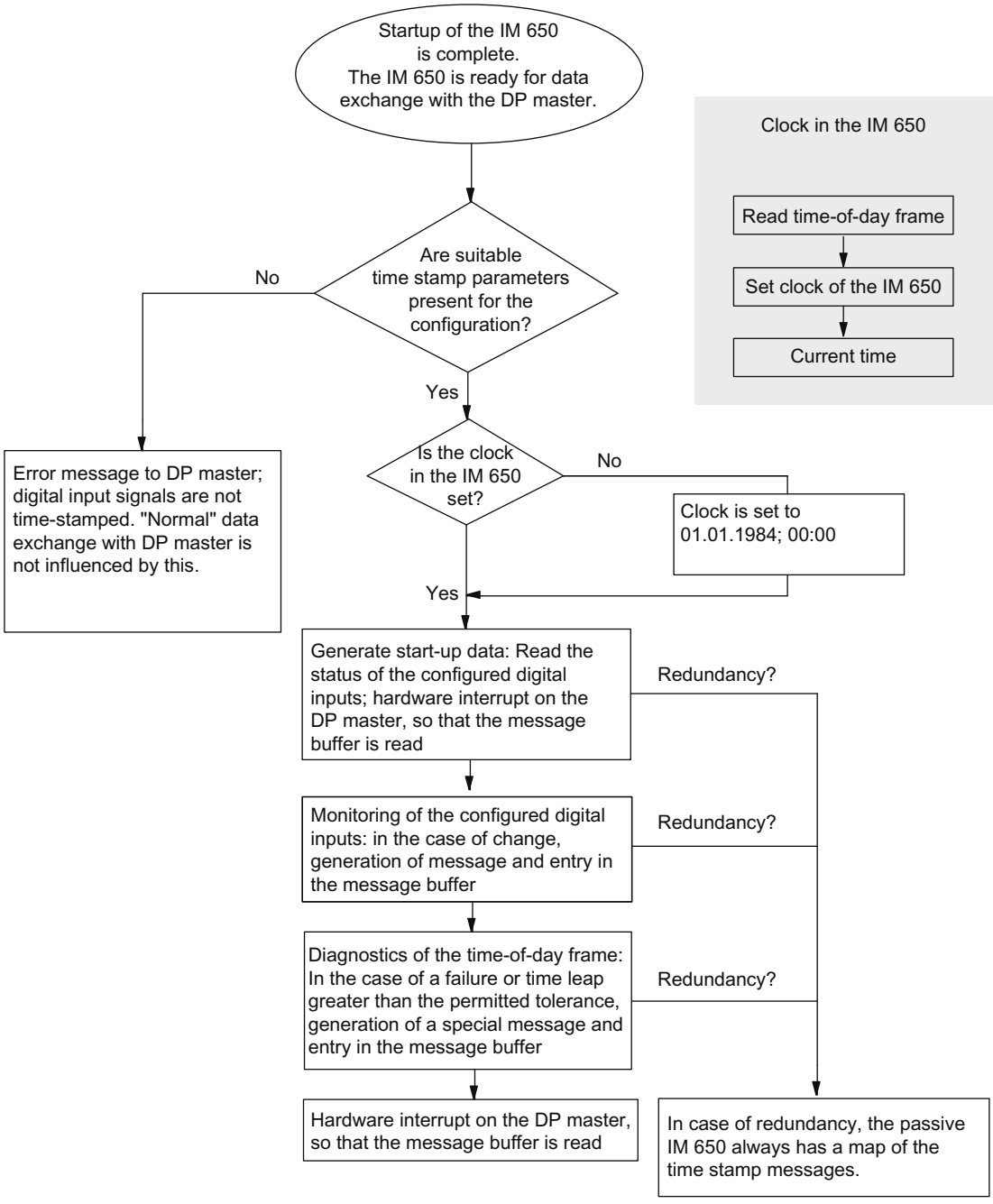

Figure 5-2 Startup for time synchronization / time stamping

Actions after a diagnostic message of the ET 200PA SMART

Every diagnostic message triggers the following actions:

- The diagnostics are signaled as diagnostic interrupts.
- The module status and the channel-related diagnostics are also available in the diagnostic frame.
- After a diagnostic message, the message is entered in the diagnostic frame as a diagnostic interrupt block (only one interrupt at a given time) and stored in the diagnostic buffer of the CPU.
- The SF LED on the IM 650 is lit.
- OB 82 is called in the CPU. If OB 82 is not available, the CPU goes to STOP state.
- The diagnostic is signaled to the PCS 7 module driver.
- Acknowledgement of the diagnostic interrupt by the CPU (a new diagnostic interrupt is possible afterwards)

Causes of errors and corrective measures

The causes of errors that trigger the diagnostics messages and possible corrective measures are described in section "Interrupt, error and system messages (Page 87)".

Maintenance and service 6

6.1 Maintenance of ET 200PA SMART

Scope of maintenance

The ET 200PA SMART is a maintenance-free DP slave.

Maintenance is limited to the replacement or exchanging of modules or components.

6.2 Replacing the power supply module

Initial situation

The power supply module you want to replace is installed and wired. You want to install a new power supply module of the same type.

Slot numbering

If you have provided the power supply modules in your system with slot numbering, when replacing modules you must remove the numbering from the old power supply modules and then reuse it in the new power supply modules.

Removing the power supply module

To remove the power supply module, proceed as follows:

1. Actuate the line voltage disconnect switch in order to de-energize the power supply module.
2. Remove the cover.
3. Disconnect all the wiring.
4. Loosen the fixing screws of the power supply module.
5. Swing the power supply module out.

Installing the new power supply module

To install the new power supply module, proceed as follows:

1. Check the setting of the voltage selector switch.
2. Hook the new power supply module of the same type onto the rail and swing it down into place.
3. Screw the power supply module on securely.
4. Wire the power supply module.

5. Connect the power supply module to the line voltage.
6. Close the cover.

Behavior of the ET 200PA SMART after module replacement

If there is an error after replacement of the power supply module, you can view the cause of the error in the diagnostic buffer of the CPU with *HW Config*.

6.3 Replacing the IM 650

Initial situation

The IM 650 is mounted. A new IM 650 is to be mounted.

Slot numbering

If you have provided the modules in your system with slot numbering, when replacing modules you must remove the numbering from the old module and then reuse it in the new module.

IM 650: Unplugging the bus connector

You can unplug the bus connector **with looped-through bus cable** from the PROFIBUS DP interface without having to interrupt the data communication on the bus.

Note

Disturbance of the data communication on the bus is possible!

The bus segment must always be connected at both ends to the terminating resistor. This is not the case, for example, when the last slave with the bus connector is de-energized. Because the terminating resistor in the bus connector obtains its voltage from the device, the function of the terminating resistor is impaired.

Ensure that the devices to which the terminating resistor is connected are always supplied with voltage.
Tip: Use the PROFIBUS terminator as an active bus termination.

Replacement in the redundant configuration

Note

Replace the IM 650 only in de-energized state!

If the module is replaced while under voltage, the specified switchover times cannot be guaranteed and the I/O modules may fail for a certain time and output "0".

If you are replacing the IM 650 in a redundant configuration, the following behavior applies:

"ACT" LED is on:	"ACT" LED is off:
The IM 650 is the active module of the two IM 650 modules.	The IM 650 is the passive module of the two IM 650 modules. You can replace this IM 650 without changeover processes occurring in the ET 200PA SMART.

Removing the IM 650

To remove the IM 650, follow these steps in the order given:

1. **For redundancy:** The IM 650 to be replaced must be de-energized!
   Switch off the assigned power supply module or disconnect it from the IM 650.

NOTICE
Short-circuit If in redundant mode, the two IM 650 modules are connected to one power supply module, then on disconnection of the 24 V supply from one IM 650, a short-circuit of the non-insulated (loose) cable ends may occur. In the event of this type of short-circuit of the power supply, the second IM 650 and thus your ET 200PA SMART also fail completely. Therefore, exercise extreme caution when disconnecting the supply voltage and insulate the two cable ends until connecting to the new IM 650.

   No redundancy: Set the On/Off switch of the power supply module to position 0 (⏻: output voltages 0 V).
2. Unplug the bus connector.
3. Disconnect the wiring.
4. Loosen the fixing screws of the IM 650.
5. Swing the IM 650 out.

Installing the new IM 650

To install the new IM 650, proceed as follows:

1. On the IM 650, set the same DP address as on the old IM 650.
2. Hook on the new IM 650 and swing it down.
3. Screw the module on securely.
4. Wire the IM 650.
5. Screw the bus connector into place.
6. Set the standby switch of the power supply module to position 1 (output voltages at rated value).

Behavior of the ET 200PA SMART after module replacement

If there is an error after module replacement, you can view the cause of the error in the diagnostic buffer with *HW Config*.

In the case of redundancy

Note

If the active IM 650 ("ACT" LED On) is to be replaced, the I/O will only continue running undisturbed if

- the BF LED is not lit or flashing and the SF LED is not flashing at 0.5 Hz on the passive IM 650
- in a flying redundancy system, it is evident from the master diagnostics that both IM modules are accessible (in this case, the BF LED can flash).

Have you replaced an active IM 650 ("ACT" LED on)?	Have you replaced a passive IM 650 ("ACT" LED Off)?
Then, a changeover to the other IM 650 occurred in the ET 200PA SMART and this one also maintains the data communication with its DP master.	No change in the data communication: the active IM 650 has maintained the data communication with its DP master.
Does the new IM 650 have a different product version than the other one that has not been replaced?	
If, after replacement, the newly installed IM 650 goes "into STOP" (all LEDs flashing), then the versions are not compatible. In this case, you must switch off the ET 200PA SMART and upgrade both IM 650 modules or use a compatible version. Please contact your Siemens representative.	

See also

Diagnostics of the IM 650 by LED displays (Page 88)

6.4 Replacing I/O modules

Requirement

The ET 200 PA SMART is configured with active bus modules. You can replace the modules during operation if you have configured the ET 200PA SMART for "Module replacement in runtime".

NOTICE
Uncontrolled system states Uncontrolled system states may cause property damage. Plugging in output modules can lead to uncontrolled system states! This also applies if you insert input/output modules tilted on the bus module. When plugging in an output module, the outputs set by the user program become active immediately! For pulling out an output module, set the outputs to "0" in the user program. If modules are pulled and plugged incorrectly, neighboring modules may be disturbed through the backplane bus.

Removing a module

Proceed as follows when removing modules:

1. Loosen the fixing screw(s) of the module.
2. Swing the module out.
3. Open the front door.

4. Release the front connector and remove it.
   - For 20-pin front connector: Use one hand to press the release button down (4) and use your other hand to withdraw the front connector using the grips (4a).
   - For 40-pin front connector: Loosen the fixing screw in the center of the front connector. Withdraw the the front connector using the grips.
5. Remove the labeling strip from the module.

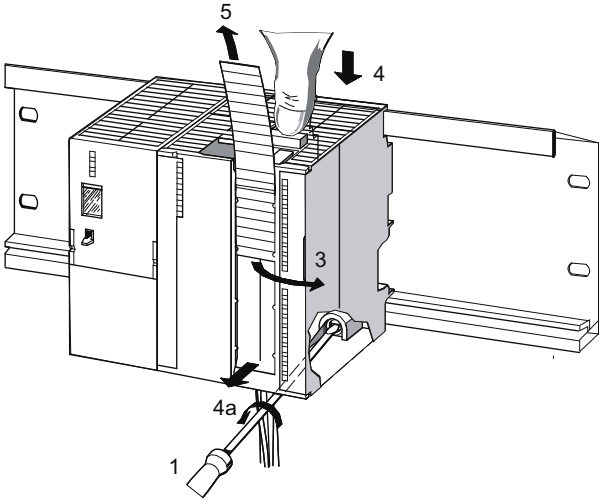

Removing the front connector coding

Prior to installing the new module you must remove the top part of the front connector coding on the module. Reason: This part is already available in the wired front connector (refer to the following figure).

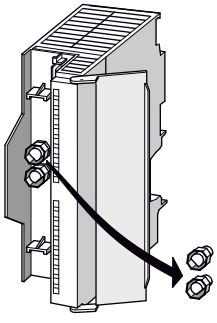

Figure 6-1 Removing the front connector coding

Installing a new module

Proceed as follows to install a new module:

1. Insert the front connector in the module and put it into operating position.
2. Hook in the new module and swing it downwards.
3. Screw the module into place.
4. Slide the labeling strip of the removed module into the newly installed module.

Behavior of the ET 200PA SMART during module replacement

Table 6-1 Behavior of the ET 200PA SMART when modules are pulled or plugged

Pulling/ plugging	Actual = preset configuration?	Behavior of ET 200PA SMART
Removing a module	–	The IM 650 signals via diagnostics when a module is pulled. The diagnostic event corresponds to the pulled interrupt. The IM 650 also enters the removal of a module in the identifier-related diagnosis.
Inserting a module	Yes	When a configured module is plugged, the IM 650 deletes the entry in the identifier-related diagnostics that the module is no longer being addressed by the IM 650. If the ET 200PA SMART is in user data mode, then the IM 650 signals a diagnostic event corresponding to the plugged interrupt. The parameters of the inserted module are assigned as appropriate and the module is accepted in the ET 200PA SMART.
	No	The IM 650 ignores the inserted module. The IM 650 signals a diagnostic event corresponding to the plugged interrupt. In the identifier-related diagnostics, the entry remains after the module has been removed.

See also

Identifier-related diagnosis (Page 96)

Interrupts (Page 105)

6.5 Replacing the bus module

Removing the bus module

Only remove bus modules in de-energized state!

Proceed as follows to remove the bus module:

1. Set the On/Off switch of the power supply module to position 0 (⏻: output voltages 0 V).
2. Remove the modules on the bus module that is to be replaced and on all the bus modules on the right, as well as the module directly to the left.
3. The bus modules are locked together. On the bus module that is to be replaced, press down the lock of the bus module on the right, and push the bus module(s) on the right to the right.
4. Press down the lock on the left side of the bus module that is to be replaced and push this module to the right.

5. Using a screwdriver push the lock down towards the rail.
6. Lift the bus module off the mounting rail. You can also remove the bus modules from the mounting rail by sliding them to the right.

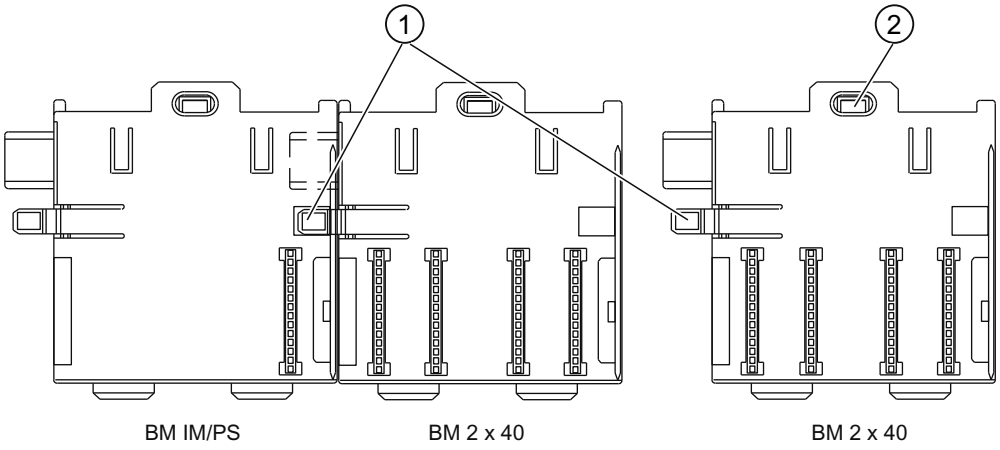

① Lock holding the bus modules together
② Lock holding the module to the rail

Installing a new bus module

You install the new bus module as described in section "Installing active bus modules and modules (Page 35)".

6.6 Exchanging fuses in digital output modules

Fuses for digital outputs

Digital output modules of the ET 200PA SMART have no fuses.

The digital outputs of the following digital output modules from the S7-300 series of modules are protected channel group by channel group against short-circuit with fuses.

- Digital output module SM 322; DO 16 x AC120/230V (6ES7 322-1FH00-0AA0)
- Digital output module SM 322; DO 8 x AC120/230V (6ES7 322-1FF01-0AA)

Replacement fuses

If you must replace the fuses, you can use, for example, the following fuses:

- Fuse 8 A, 250 V
  (e.g. Wickmann 19 194-8 A; Schurter SP001.013; Littlefuse 217.008)
- Fuse holder (e.g. Wickmann 19 653)

Position of the fuses

The digital output modules have one fuse per channel group. The fuses are located at the left side of the digital output module. The figure shows you where to find the fuses on the digital output modules.

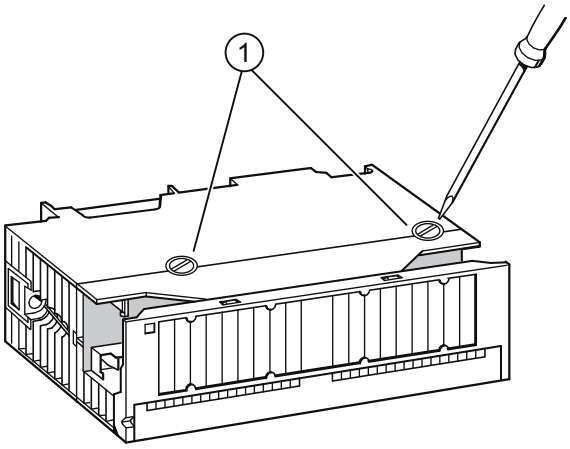

① Fuses

Figure 6-2 Location of the fuses on digital output modules

Replacing a fuse

The fuses are located on the left side of the module.

1. Dismantle the digital output module.
2. Screw the fuse holder from the digital output module.
3. Replace the fuse.
4. Screw the fuse holder back into the digital output module.
5. Install the digital output module again.

6.7 Update of the IM 650

6.7.1 When should you update the IM 650?

After addition of (compatible) functions or improvements of performance, you should update the IM 650 interface module to the latest firmware version.

6.7.2 Update of the IM 650

Where can I obtain the latest firmware version?

The latest firmware version is available from your Siemens contact or from the internet.

Tip:

- Prior to the update, make a note of the current version of your firmware.
- If you encounter problems with the new firmware, you can then download the previous (current) firmware from the Internet and transfer it to the interface module again.

Principle

There are 2 ways to update the IM 650:

- From PG/PC via PROFIBUS DP (direct)
- From PG/PC via PROFIBUS DP and CPU

After a successful update, apply an adhesive label with the updated firmware version of the IM 650 over the label of the previous firmware version.

With the IM 650, it is possible to update the firmware of both interface modules during redundant operation. The update is performed with the support of SIMATIC Manager and has no effect on the active application. The firmware in a redundant system is updated from the PG/PC via PROFIBUS DP (direct).

For additional information including information on the procedure for the direct firmware update of both IMs, refer to manual "PCS 7 Process Control System, Service Support and Diagnostics", section "How to perform a firmware update of an interface module (IM)" in section "Directed firmware update of both IMs in a redundant system via PROFIBUS".

Requirements for an update

- The IM 650 in the station that is to be updated must be accessible online.
- The files with the current (new) version of the firmware must be available in the file system of your PG/PC.

Restart after update

You can set the following options via the Update user interface of *SIMATIC Manager*.

- The IM 650 executes a reset automatically after a successful update so that it can start up with the newly loaded firmware.

  Note

  If the "Activate firmware after download" option is selected, a brief station failure of the ET 200PA SMART will occur. If no provisions have been made for this case, then the update causes the CPU to go to STOP on account of rack failure.

- The IM 650 must be reset by switching off the supply voltage and the supply voltage must be switched on again before the IM 650 starts up with the new firmware.

Update unsuccessful

If the update fails, after the supply voltage is switched off and back on, the IM 650 always starts up with the firmware that was current up to that time ("old" firmware).

Functions

7

7.1 Connection of HART field devices

Example configuration with IM 650 and a HART module

You can use HART modules in the ET 200PA SMART. In this application, the ET 200PA SMART is the HART master for HART slaves (intelligent field devices).

The IM 650 passes data from the PG/PC via the HART analog module to the intelligent field devices and back again (the thick line indicates the communication path).

A detailed description of the application and use of HART field devices can be found in the "HART" section.

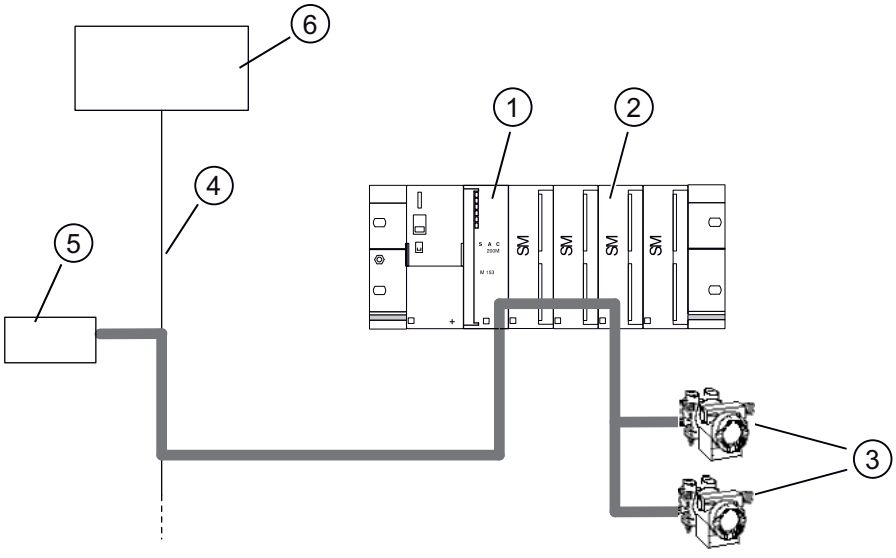

① IM 650

② For example: SM 331; AI 2 x 0/4 … 20 mA HART

③ Intelligent field devices

④ PROFIBUS DP

⑤ PG/PC

⑥ DP master

Figure 7-1 Passing parameter assignment data with an IM 650 and HART modules

Parameter assignment / Operation of HART field devices

The following is required for the parameter assignment / operation of HART field devices:

- EDD (for ET 200PA SMART) version V1.1.17 or higher for S7-300 HART modules
- EDD (for ET 200PA SMART) version V1.2.0 or higher for ET 200PA SMART HART modules.

The EDD (Electronic Device Description) is required for setting up HART field devices. It is included on the PDM Device Library CD supplied with PDM.

PDM version V8.2.0.1 or higher with PDM Device Library 1#2014 (EDD V1.1.17)

PDM version V9.1.0.6 (with EDD V1.2.0)

See also

S7-300 Automation Systems, ET 200M Ex I/O Modules (http://support.automation.siemens.com/WW/view/en/1096709)

ET 200M Distributed I/O Device HART Analog Modules (http://support.automation.siemens.com/WW/view/en/22063748))

7.2 Expanded I/O input data

The IM 650 interface module supports up to 32 bytes of I/O input data.

This function is only available in conjunction with the ET 200PA SMART analog input module AI16x16Bit.

For the expanded I/O input data (Byte 16...Byte 31), the same system properties apply as for the "standard" I/O input data (Byte 0...Byte 15). This data is updated at the same rate and has the same substitute value behavior as the "standard" I/O input data.

7.3 Support of additional input data

The IM 650 interface module supports additional input data, such as the HART primary and secondary variables provided by HART analog modules from the S7-300 series of modules. For detailed information, refer to the documentation for the respective HART modules.

- ET 200M Distributed I/O Device HART Analog Modules (http://support.automation.siemens.com/WW/view/en/22063748)“

Additional output data are not supported.

For the ET 200PA SMART, this means that:

- When the HART analog module is used, the HART secondary variables must be activated in the parameter assignment dialog of the module.
- The IM 650 supplies the substitute value "0" in the expanded input data of an module that is starting up or that has been pulled.

- The total amount of input data must not exceed the following values:
  - 128 bytes per slot
  - 244 bytes per ET 200PA SMART

  These limits are checked during configuration.
- "Standard" input data and additional input data are internally consistent but not consistent relative to each other.
  The following figure illustrates this point.

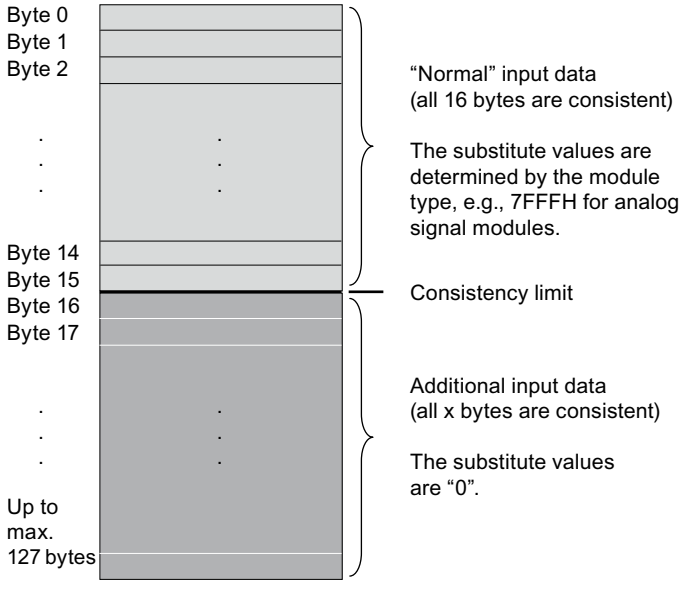

The additional input data is updated at longer time intervals than the "standard" input data.

7.4 Time stamping of the input signals with IM 650

7.4.1 Principles

Time stamping with the IM 650 is possible:

- For digital input signals of modules from the S7-300 series of modules. Signals of ET 200PA SMART input modules are not time stamped.
- With the PCS 7 system solution using the IMDRV_TS block.

For a detailed description of time stamping, refer to manual PCS 7 Process Control System High-Precision Time Stamping (http://support.automation.siemens.com/WW/view/en/68154111).

Rules

You can use the time stamping for selected input signals and for input signals that are important for your application. On an ET 200PA SMART, the input signals of a maximum of 128 digital inputs can be time stamped. For a better load distribution on the PROFIBUS DP and in the IM 650, we recommend distributing these signals if necessary over several ET 200PA SMART stations.

The IM 650 interface module supports time stamping of input signals of a maximum of 32 digital inputs per slot. The existing limit of a maximum of 128 time-stamped channels (DI) per ET 200PA SMART is retained.

You can use the following digital input modules from the S7-300 series of modules for the time stamping:

- 6ES7321-7EH00-0AB0 (1 ms)
- 6ES7321-7TH00-0AB0 (10 ms)
- 6ES7321-7RD00-0AB0 (10 ms)

The figures shown in brackets specify the maximum possible accuracy. Also observe the installation guidelines for the respective accuracy class.

Limit conditions

The accuracy of the time stamping is influenced by the following limit conditions:

- The number of modules used in the station affects the accuracy of the time stamping, that is, a maximum accuracy of 1 ms is possible with up to 8 modules and a maximum accuracy of 10 ms with up to 12 modules.
- The number of time-stamped input signals in an ET 200PA SMART affects the accuracy of the time stamping, that is, more time-stamped input signals reduce the accuracy of the time stamping.
- Process interrupts as well as reading/writing of data records reduce the accuracy of the time stamping.
  The specified accuracies for the time stamping (10 ms or 1 ms) will, however, always be adhered to.

Operating principle

The IM 650 provides changed input signals with the respective current time and saves these in a buffer (message list). Such a message list is a data record with a maximum of 20 messages about time-stamped signal changes. The IM 650 can store up to 15 data records.

A **signal message** provides the following information:

- Slot number of the (signaling) DI module (4 ... 15)
- Channel number of the DI module
- Signal state (incoming, outgoing)
- Time of the signal change

When there are time-stamped signals or a data record is full, the IM 650 generates a hardware interrupt to the DP master. The buffer can be evaluated, for example, with "Read data record".

For events that affect the time stamping (STOP of the time stamping, time frame failure, etc.), special messages are generated.

A **special message** provides the following information:

- Slot number of the IM 650 (always "2")
- Identifier of the special message (e.g. STOP of the time stamping)
- Characteristic of the special message (e.g. incoming/outgoing)
- Time of the special message

Parameter assignment

With the parameter assignment, you specify which digital input data of the IM 650 will be monitored. For the time stamping, these are signal changes on digital inputs.

Both signal edges are always stamped. You can make the following assignment for this:

- "Rising edge" (0 → 1) as "incoming signal"
  It follows that the "falling edge" (1 → 0) is the "outgoing signal".
- "falling edge" (1 → 0) as "incoming signal"
  It follows that the "rising edge" (0 → 1) is the "outgoing signal".

Note

There are no parameters for setting the time stamping accuracy. To achieve the respective accuracy however, the specified conditions and rules must be complied with.

7.4.2 Time stamp with 10 ms precision

Requirements

- The 10 ms time stamping of digital input signals must be supported end-to-end by all hardware and software components, from the IM 650 to the automation system with its components all the way to the operator station for plant visualization.
- Set the synchronization interval to 10 seconds.

Example configuration for time stamping of signal changes with IM 650

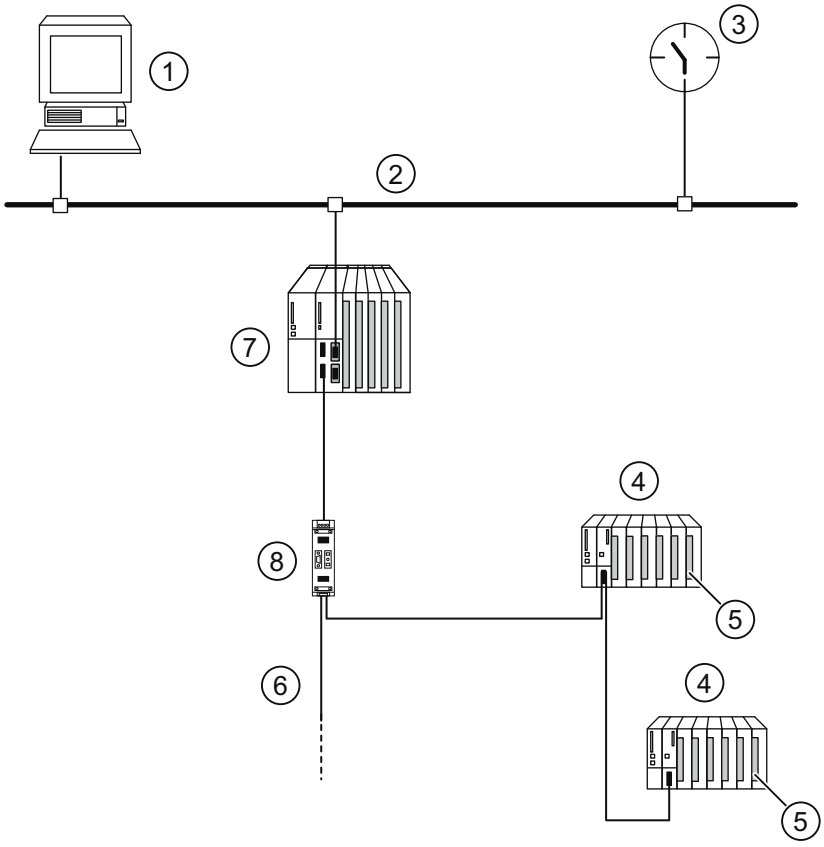

① Operator station (OS) for unit visualization
② Industrial Ethernet
③ Time sender (SICLOCK)
④ ET 200PA SMART Distributed I/O
⑤ Digital input module, e.g., SM 321 (6ES7321-7TH00-0AB0)
⑥ PROFIBUS DP
⑦ AS 410-5H

Figure 7-2 Example configuration for time stamping of signal changes with IM 650

7.4.3 Highly precise time stamp with 1 ms precision

Rules

The following configuration is permitted for the high-precision time stamping with 1 ms accuracy:

- Automation system with high-precision time synchronization
  A time-of-day master, e.g. SICLOCK TM, must be available in the automation system for this.
- ET 200PA SMART with IM 650
- No RS 485 repeaters between the DP master and the ET 200PA SMART on which input signals are to be time stamped
- Only digital input modules are permitted to be used in the ET 200PA SMART.
- Only a maximum of 8 modules may be plugged in the ET 200PA SMART.
- Only signals of the digital input module 6ES7321-7EH00-0AB0 may be time stamped.
  - The assigned input delay of all digital inputs for time stamping must be identical and equal to the minimum value (100 µs).
  - Hardware interrupts of all modules must be deactivated.
- Input signals that are to receive a time stamp must be chained without gaps to the extent possible starting from slot 4, channel 0.
- The startup time of the ET 200PA SMART must be allowed to elapse (at least 10 seconds).
- The physical characteristics of the transducer must be observed. Different transitions of the input signals (rise time, spikes, ...) can have different effects on the accuracy of the time stamping.

Limitation

During the following events, the accuracy of time stamping may worsen:

- Processing of diagnostics
- Firmware update
- Reading of I&M data
- Other acyclic services

Scope

The accuracy of the time stamping applies throughout the chain.

7.4.4 Time synchronization for time stamping

Requirements

The following requirements apply to the time synchronization for time stamping:

- There must be a time-of-day master, e.g. SICLOCK TM, available in the automation system that operates with a synchronization interval of 10 s.
- The time-of-day frame must be passed via the PROFIBUS DP interface of the CPU.
- A synchronization interval of 10 s must be assigned for the IM 650.

Time synchronization for high-precision time stamping with 1 ms accuracy

You must realize the time synchronization for the high-precision time stamping with the following hardware components and settings:

- **Time-of-day master:** SICLOCK TC 400 with GPS synchronization
  Parameters to be set for SICLOCK TM:

Path / tab		Parameter (with number from the SI-CLOCK parameter menu)	Value
Synchronization / Redundancy	Synchronization	Mode (218)	Ramp
		Step pos. (219)	Micro step
		Step neg. (220)	
Inputs	Input general	Input type (230)	DCF
	Input E1	E1 active / passive	TTY passive
		DCF alarm (239)	5
Ethernet	LAN general	LAN timeout (349)	0.5 s
	LAN 1-5	Adr1 protocol (e.g. 350)	Layer 2 - S5
		Adr1 send (e.g. 351)	10 s
		Adr1 def. (e.g. 352)	broadcast
	Adr1 is given as an example. Other LAN-connections / addresses have other parameter numbers accordingly.		
	LAN extra	SNTP server (550)	Off

- **Ethernet:** CP 443-1; 6GK7443-1EX30-0XE0
  Parameters to be set for Ethernet CP:

Parameter	Value
Forward time	from LAN to station
Switch on the time synchronization in SIMATIC procedure	

- **CPU 410:**
  Parameters to be set for the CPU:

Path / tab		Parameter	Value
Diagnostics / Clock > Synchronization	Type of synchronization	in the AS	none or as slave

7.4.5 Time stamping in the redundant system

The IM 650 supports the time stamping function even in the redundant system.

Time stamping of signal changes in a redundant system

Both IM°650 modules save the messages of the time-stamped signals. After a changeover from the active to passive IM 650, the "new" active IM 650 can thus provide the current messages for further processing.

Note

During the changeover between the two IM 650 modules, signal changes are not time stamped. This time is communicated by the special message "Changeover at redundancy BEGINNING / END".

You can find more information on time stamping in redundant systems in the "PCS 7 documentation (http://support.automation.siemens.com/WW/view/en/10806846/130000)".

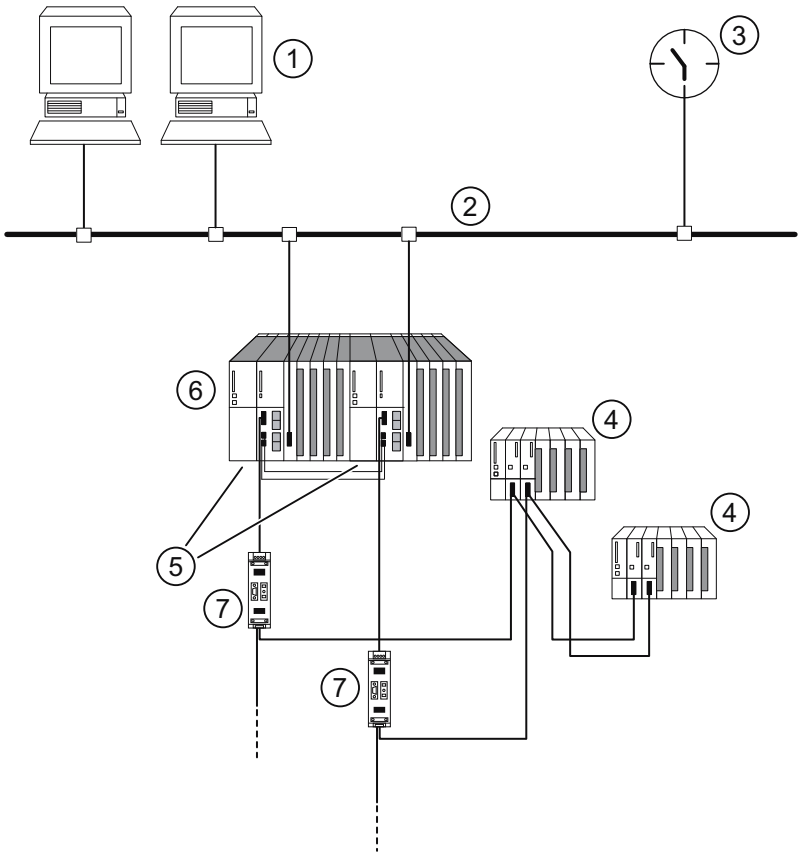

Figure 7-3 Example configuration with 2 x IM 650 modules in a redundant system

① WinCC operator station (OS) for plant visualization
② Industrial Ethernet
③ Time-of-day master (SICLOCK)
④ ET 200PA SMART Distributed I/O with 2 x IM 650
⑤ Redundant DP master system
⑥ 2 x AS 410 in a redundant configuration
⑦ Optional: RS 485 repeater

7.5 Time synchronization on the ET 200PA SMART I/O bus

Properties

The IM 650 interface module supports time synchronization on the I/O bus.

- The IM 650 sends the current time to the I/O bus after its time synchronization has been enabled during parameter assignment.
- The synchronization on the I/O bus takes place in the synchronization interval that is set on the PROFIBUS DP.
- The accuracy deteriorates negligibly compared to the time received on the PROFIBUS DP. The accuracy of 10 ms is always guaranteed.

Additional information on time synchronization can be found in function manual "PCS 7 Process Control System, Time Synchronization".

Operating steps for activation

You activate the time synchronization on the I/O bus using the following steps:

PROFIBUS DP:

1. Complete the PROFIBUS DP with a time-of-day master.
2. Activate the time synchronization in the properties of the DP master.

Note

In the H-system,you must insert a time-of-day master in both the PROFIBUS DP systems and activate the time synchronization.

Configuration of the IM 650:

1. In HW-Config, open the dialog **DP slave properties > Time-of-day Synchronization**.
2. Select the **Time synchronization** check box.
3. Enter the synchronization interval active on the PROFIBUS DP (e.g. 10 s) as the synchronization interval.

7.6 Redundancy with IM 650

Use

In a redundant configuration, the IM 650 interface modules can be operated redundantly in conjunction with a CPU 410-5H or CPU 410 SMART.

Requirements for the ET 200PA SMART

- Both IM 650 modules are plugged into an active bus module BM IM/IM.
  The arrangement rules indicated in section "Installation (Page 31)" apply to the active bus modules and interface modules used.
- The SYNC / FREEZE function must not be activated In redundant mode.

Note

If the SYNC / FREEZE function is nevertheless activated in a redundant system, the user bears the responsibility for the behavior of the redundant system (e.g. during changeovers).

Sample configuration of a redundant DP-master system and IM 650

The following figure shows an example of a redundant configuration. For the AS 410H, the ET 200PA SMART is a single-channel switched (distributed) I/O. A detailed description of H-systems can be found in manual "CPU 410-5H Process Automation (http://support.automation.siemens.com/WW/view/en/74736834)".

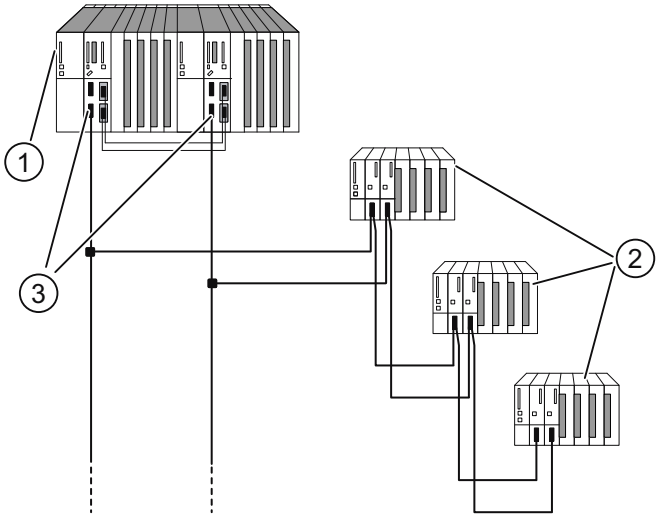

Figure 7-4 Redundancy with 2 x IM 650 modules in an H-system

① AS 410H

② ET 200PA SMART Distributed I/O with 2 x IM 650

③ Redundant DP master system

Compatible versions

If you use the ET 200PA SMART in a redundant configuration, you must use compatible versions for the two IM 650 modules.

Compatible versions of the IM 650 interface modules can be swapped during "Module replacement in runtime" without switching off the I/O modules.
For more information, refer to section "Arrangement of the modules for the function "Change During Operation" and / or "Redundancy" (Page 20)".

Note

The functions that can be used are limited to the respective lower order number or the earlier version.

AS 410H as DP master

You require PCS 7 as of V8.1

DP master 1 and DP master 2 run the same user program. Both have the same parameter assignment and configuration for the IM 650 interface modules.

Voltage supply of the IM 650 interface modules

In order to ensure availability in redundant mode with 2 x IM 650, we recommend use of a separate power supply module for each IM 650.

7.7 System modification during operation

Plant changes in runtime are possible with the IM 650 in redundant and in non-redundant configurations.

Plant changes in a non-redundant system

A detailed description of this function and its parameter assignment in non-redundant systems can be found in function manual "Plant changes in runtime using CiR (http://support.automation.siemens.com/WW/view/en/14044916)".

Plant changes in a redundant system

Information on the use of this function in redundant configurations can be found in manual "CPU 410-5H Process Automation (http://support.automation.siemens.com/WW/view/en/74736834)".

7.8 Identification and maintenance data (I&M data)

Definition and properties

The identification and maintenance data (I&M) stored in a module supports you when:

- Checking the system configuration
- Locating hardware changes in a system
- Troubleshooting in a system

Identification and maintenance data (I&M) is supported by the IM 650 interface module as well as by a few special I/O modules from the S7-300 series of modules.

Identification data (I-data) contains information about the module, such as article number and serial number, some of which are printed onto the module housing as well. I-data is manufacturer information about the module and can only be read.

Maintenance data (M data) is system-dependent information, such as installation location and date. M data is created during the configuration and written to the module.

The modules can be uniquely identified online by means of the I&M data.

7.8.1 I&M data for PROFIBUS DP

Note

Only one DP master can access the I&M data of an ET 200PA SMART at a time.

Reading and writing I&M data with SIMATIC Manager

The I&M data is displayed in the "Module status - IM 650" and "Properties - DP Slave" tabs in SIMATIC Manager.

The M-data of modules can be entered in HW Config (e.g., in a dialog box during configuration).

The access to the I&M data takes place in accordance with IEC 61158-6.

In the H-system, the interface module from which the I&M data is to be read must be accessible online.

Reading and writing I&M data without SIMATIC Manager

If you want to use the I&M data without using PCS 7 or SIMATIC Manager, you must access the data in accordance with the specifications of the PROFIBUS Guideline – Order No. 3.502, Version 1.1 May 2003.

In the AS 410H, you must address the interface module (slot 245 or 246) from which the I&M data is to be read. Slot 245 designates the left interface module and slot 246 the right interface module on the BM IM/IM.

Example of reading the I&M data

You can selectively access specific I&M data using **Read data record**. A two-level access is necessary for this:

1. Data record 248 has a directory containing the associated data record numbers for the various indices (refer to the following table).

Table 7-1 Structure of DS 248 for the IM 650

Contents	Length (bytes)	Coding (hex)
Header information		
ID of the contents list	2	00 01
Index of the contents list	2	00 00
Length of the following blocks in bytes	2	00 08
Number of blocks	2	00 05
Block information for the I&M data		
SSL ID	2	F1 11
Associated data record number	2	00 E7
Length of the data record	2	00 40
Index	2	00 01

Contents	Length (bytes)	Coding (hex)
SSL ID Associated data record number Length of the data record Index	2 2 2 2	F1 11 00 E8 00 40 00 02
SSL ID Associated data record number Length of the data record Index	2 2 2 2	F1 11 00 E9 00 40 00 03
SSL ID Associated data record number Length of the data record Index	2 2 2 2	F1 11 00 EA 00 40 00 04
8-byte block information for additional data record objects		
	Σ: 48	

2. You can find the portion of the I&M data assigned to the respective index under the associated data record number (see table below: *Structure of the I&M-data*).

All data records containing I&M data have a length of 64 bytes.

The data records are structured in accordance with the principle shown in the table below.

Table 7-2 Basic structure of data records with I&M data

Contents	Length (bytes)	Coding (hex)
Header information		
SSL ID	2	F1 11
Index	2	00 0x
Length of the I&M data	2	00 38
Number of blocks with I&M data	2	00 01
I&M data		
Index	2	00 0x
I&M data for the respective index (see following table)	54	

Structure of the I&M data

The data structures of the I&M data correspond to the specifications of the PROFIBUS Guideline - Order No. 3.502, Version 1.1 May 2003.

Table 7-3 Structure of the I&M data

I&M data	Access	Default setting	Explanation
Identification data 0: Index 1 (data record 231)			
MANUFACTURER_ID	read (2 bytes)	2A hex (= 42 dec)	The name of the manufacturer is stored here. (42 dec = SIEMENS AG)

I&M data	Access	Default setting	Explanation
ORDER_ID	read (20 bytes)	depending on the module	The article number of the module is stored here.
SERIAL_NUMBER	read (16 bytes)	depending on the module	The serial number of the module is stored here. This enables unique identification of the module.
HARDWARE_REVISION	read (2 bytes)	depending on the module	The version of the module is stored here. Incremented when the hardware or firmware of the module changes.
SOFTWARE_REVISION	read (4 bytes)	Firmware version	Provides information about the firmware version of the module. If the firmware version number is incremented, then the version of the module (HARDWARE_REVISION) is also incremented.
REVISION_COUNTER	read (2 bytes)	0000 hex	Reserved
PROFILE_ID	read (2 bytes)	F600 hex	Means "Generic Device"
PROFILE_SPECIFIC_TYPE	read (2 bytes)	0005 hex	On interface modules
IM_VERSION	read (2 bytes)	0101 hex	Provides information about the version of the I&M data. (0101 hex = Version 1.1)
IM_SUPPORTED	read (2 bytes)	000E hex	Shows information about the I&M data. (Index 2 to 4)
Maintenance data 1: Index 2 (data record 232)			
TAG_FUNCTION	read / write (32 bytes)	–	Enter a system-wide unique identification for the module here.
TAG_LOCATION	read / write (22 bytes)	–	Enter the installation location of the module here.
Maintenance data 2: Index 3 (data record 233)			
INSTALLATION_DATE	read / write (16 bytes)	–	Enter the installation date and, if necessary, the associated time for the module.
RESERVED	read / write (38 bytes)	–	Reserved
Maintenance data 3: Index 4 (data record 234)			
DESCRIPTOR	read / write (54 bytes)	–	Enter a comment regarding the module here.

Interrupt, error and system messages 8

8.1 Concept for Drivers and Diagnostic Blocks

Introduction

The I/O interfacing described below ensures high performance even for large project data volumes. The configuration is fast and easy to execute.

Tasks of the driver and diagnostic blocks (driver blocks)

In process control systems, certain demands are placed on the diagnostics/signal processing. This includes the monitoring of modules, DP/PA slaves and DP master systems for malfunctions and failures.

To enable this, blocks are available in the PCS 7 library that implement the interface to the hardware including test functions.

These blocks perform two basic tasks:

- They provide signals from the process to the AS for further processing.
- They monitor modules, DP/PA slaves, and DP master systems for failure.

When the process signals are read in, these blocks access the process image input (or process image partition) (PII) and when the process signals are output, they access the process image output (or process image partition) (PIQ). The tasks carried out by each of the different blocks are identified in section "List of driver and diagnostic blocks".

Concept

The concept of the driver and diagnostic blocks for PCS 7 can be characterized as follows:

- The separation between user data processing (CHANNEL blocks) and diagnostic data processing (MODULE blocks)
- The symbolic addressing of the I/O signals
- The automatic generation of the MODULE blocks by CFC

This block concept supports all modules from the list of approved modules.
When new Siemens or non-Siemens module types are integrated, the meta-knowledge for the driver generator can be extended by additional XML files (object and action lists).

Note

Note the following:

- The library with the driver blocks has to installed using the Setup program on the PC. This is the only method of ensuring that the meta-knowledge required for the driver generator is available. You must not copy the library from another computer.
- You can also use driver blocks from another library (for example, your own blocks from your own library). You can specify this additional library in the "Generate module drivers" dialog box. The driver generator then searches for the block to be imported in the library specified here. If the block is not found here, it is searched for in the library specified in the control file (XML file).
- If the S7 program contains a signal-processing block but not from one of the PCS 7 libraries, you have to specify the version of the driver library from which the driver blocks are to be imported in the "Generate module drivers" dialog box.

Time-optimized processing

To enable time-optimized processing during runtime, the organization blocks for error handling (for example, OB85, OB86) are automatically divided into runtime groups and the driver blocks are integrated in the corresponding runtime groups.

If an error occurs, the SUBNET block, for example, activates the relevant runtime group, the RACK block or MODULE block contained in the runtime group detects the error, evaluates it and outputs a process control message to the OS.

The diagnostic information of the module block (OMODE_xx output) is also transferred to the corresponding CHANNEL block (MODE input). If necessary, this information can be displayed by means of a PCS 7 block that can be operated and monitored on the OS or by means of a user block in a process picture (color change of the measured value or flashing display, etc.).

8.2 Diagnostics of the IM 650 by LED displays

Status and error messages of the IM 650

IM 650

SF	SF	Group error	red
BF 1	BF / BF 1	Error on the PROFIBUS DP	red
BF 2	BF 2	Error on the lower-level bus (not relevant)	red
ACT	ACT	Module active (only in redundancy mode)	yellow
ON	ON	Supply voltage present	green

Table 8-1 LED displays

LEDs				Meaning	Remedy
SF	BF / BF1	ACT	ON		
Off	Off	Off	Off	No voltage is applied to the IM 650 or hardware defect of the IM 650.	Switch on the power supply module or replace the IM 650.
Irrelevant	Irrelevant	Irrelevant	On	Voltage is applied to the IM 650. IM 650 is in operation.	—
On	Off	Off	Off	IM 650 is undergoing a hardware reset after switch-on	—
On	On	On	On	Hardware test after switch-on	—
On	On	Off	Off	The operating system update is running	—
Off	Flashing 0.5 Hz	Off	Off	The operating system update has concluded successfully	
On	Flashing 0.5 Hz	Off	Off	External error, e.g. incompatible operating system	Use a suitable operating system for the update.
On	Flashing 2 Hz	Off	Off	Internal error, e.g. when writing the update files	Repeat the update process. If the LEDs repeat the error pattern, the internal memory is defective.
Irrelevant	Flashing	Off	On	IM 650 parameters are assigned incorrectly, no data exchange is taking place between the DP master and the IM 650. Causes: • PROFIBUS address is incorrect • Faults on the bus.	• Check the IM 650. • Check the configuration and parameter assignment. • Check the PROFIBUS address on the IM 650 and in the PCS 7 project (HW Config). • Check the cable length with reference to the baud rate. • Check the setting of the terminating resistors.
Irrelevant	On	Off	On	No connection to the DP master (baud rate search) Causes: • the bus communication via PROFIBUS DP to the IM 650 has been interrupted	Check the bus configuration. • Check to see if the bus connector is inserted properly. • Check whether the bus cable to the DP master is interrupted. • Switch the On/Off switch for the 24 V DC on the power supply module off and back on.
On	Flashing	Off	On	The preset configuration of the ET 200PA SMART does not match the actual configuration of the ET 200PA SMART.	Check the configuration of the ET 200PA SMART to see if a module is missing or defective or if a non-configured module is present. Check the configuration.

LEDs				Meaning	Remedy
SF	BF / BF1	ACT	ON		
On	Off	Off	On	Invalid PROFIBUS address Is the SF-LED of an ET 200PA SMART or S7-300 module also lit? • If so: Error or diagnostic in an ET 200PA SMART or S7 300 module • If not: IM 650 is defective.	Set a valid PROFIBUS address (1 to 125) on the IM 650. Check the diagnostics of the ET 200PA SMART or S7-300 module. If necessary, replace the ET 200PA SMART or S7-300 module or the IM 650, or contact your Siemens representative.
Irrelevant	Off	On	On	The IM 650 is exchanging data with the DP master in the I/O modules of the ET 200PA SMART. In redundant mode, this IM 650 is the **active** one of the ET 200PA SMART.	—
Irrelevant	Off	Off	On	Voltage is applied to the IM 650. In redundant mode this IM 650 is the **passive** one, i.e. no data exchange with the I/O modules.	—
Flashing 0.5 Hz	Off	Off	On	In redundant mode, this IM 650 is the **passive** one and is not ready for a bumpless changeover (e.g. associated CPU in STOP mode). After the transition to redundant mode, the SF LED flashes for a further 20 s.	Bring the H-system into the redundant state.
Flashing	Flashing	Flashing	Flashing	In the current operating mode, the IM 650 is not compatible with the redundant IM 650.	You can find information on compatibility between the versions of IM 650 modules in section "Arrangement of the modules for the function "Change During Operation" and / or "Redundancy" (Page 20)".

Status and error messages of the I/O modules

Every ET 200PA SMART I/O module and every I/O module with diagnostic capability from the S7-300 series of modules has a group error (SF LED).

SF LED	Meaning	Remedy
Off	• The module is in operation. No error at present. • The station is switched off. No voltage is applied to the IM 650.	
On	There is at least one error.	Evaluate and eliminate error(s).
Flashing (2 Hz)	• Faulty firmware update • The module is not located behind an IM 650 (only for ET 200PA SMART modules)	Repeat firmware update Use module only in connection with an IM 650

8.3 S7 diagnostics

8.3.1 Structure of slave diagnosis

Structure of the slave diagnostics of the IM 650

The maximum length of the diagnostic data is 130 bytes.

- The identifier-related diagnostics comprises 3 bytes. The diagnostics of the maximum of 12 slots (slots 4...15) are marked in bytes 7 and 8.
- The module status totals 8 bytes: 2 bits each per slot.
- The diagnostic interrupt can have a maximum of 63 bytes.

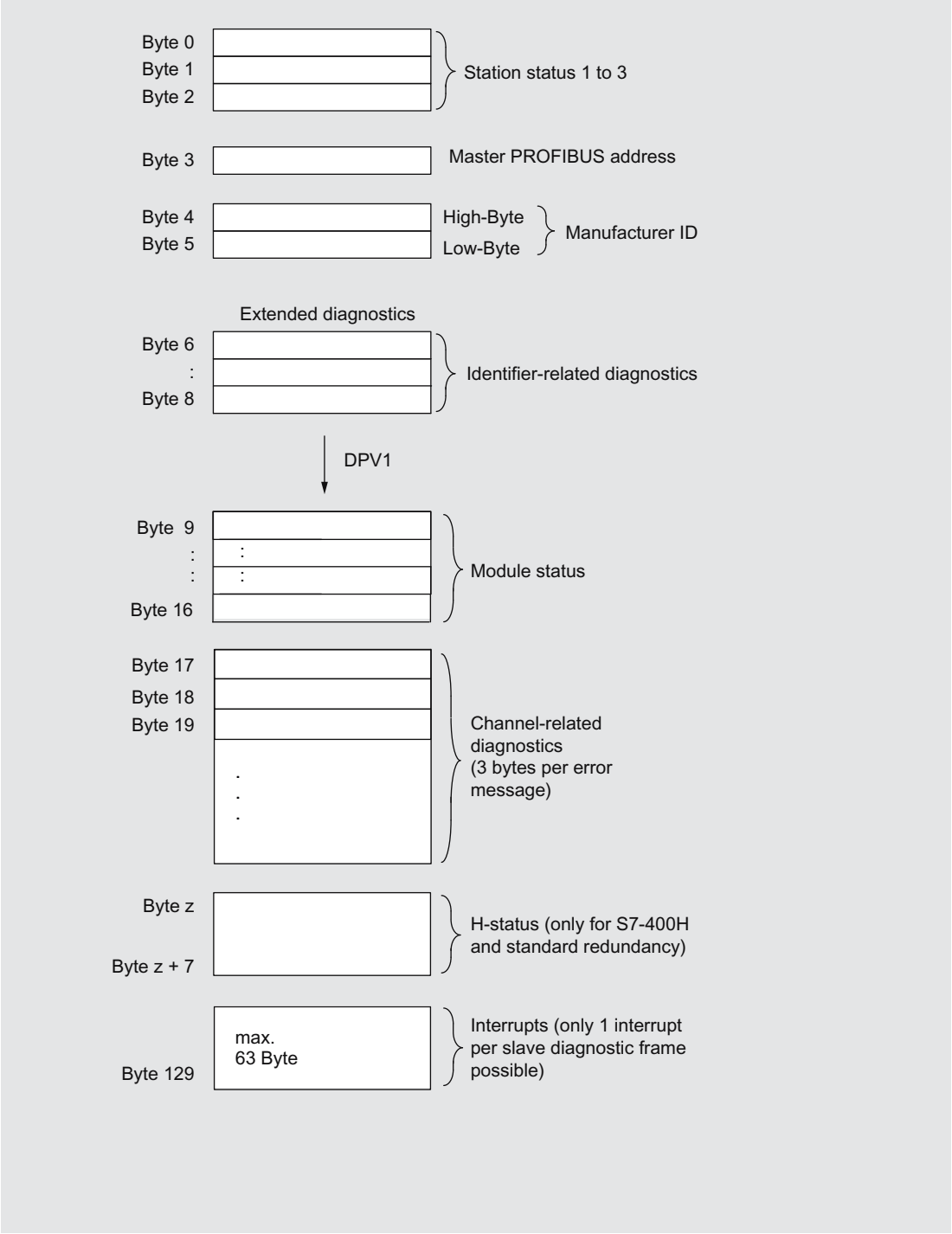

Figure 8-1 Structure of the slave diagnostics of the IM 650

Slave diagnosis in accordance with standard

The IM 650 makes available to you the slave diagnostics in accordance with the standard.

Here, in the diagnostic frame you can find detailed information in the form of the module status and channel-specific diagnostics (refer to figure above).

In order for the channel-related diagnostics to be used, the diagnostic interrupts must be activated via parameter assignment for the I/O modules.

Note

Extended diagnostics

If you first enable the diagnostic interrupt for a module during operation of the ET 200PA SMART, a pending channel error is not immediately entered in the diagnostic frame. A pending channel error will only be entered into the diagnostic frame after the triggering of the first diagnostic interrupt of the module generated after enabling.

8.3.2 Station statuses 1 to 3

Definition

The stations status 1 to 3 provides an overview of the status of a DP slave.

Station status 1

Table 8-2 Structure of station status 1 (Byte 0)

Bit	Meaning		Cause / remedy
0	1:	The DP slave cannot be addressed by the DP master. The bit in the DP slave is always 0.	• Is the correct PROFIBUS address set on the DP slave? • Is the bus connector connected? • Voltage on DP slave? • RS 485 repeater set correctly? • Has a reset been performed on the DP slave (switch off / switch off)?
1	1:	DP slave is not ready for the data exchange.	• Wait for the DP slave to complete startup.
2	1:	The configuration data sent to the DP slave by the DP master does not match the actual configuration of the DP slave.	• Correct station type or correct configuration of the DP slave entered in the configuration software?
3	1:	External diagnostics available.	• Evaluate the identifier-related, module status and/or channel-related diagnostics. As soon as all errors are eliminated, the bit 3 is reset. The bit is reset when there is a new diagnostic message in the bytes of the diagnostics indicated above.
4	1:	The requested function is not supported by the DP slave.	• Check the configuration.
5	1:	The DP master cannot interpret the response of the DP slave.	• Check the bus configuration.

Bit	Meaning		Cause / remedy
6	1:	DP slave type does not correspond to the software configuration.	• Was the the correct station type entered in the configuring software?
7	1:	DP slave parameters have been assigned by a different DP master (not by the DP master that currently has access to the DP slave).	• The bit is always 1, for example, if you access the DP slave with the programming device or another DP master. The PROFIBUS address of the DP master that configured the DP slave is located in the "Master PROFIBUS address" diagnostic byte.

Station status 2

Table 8-3 Structure of station status 2 (Byte 1)

Bit	Meaning	
0	1:	The DP slave parameters must be reassigned.
1	1:	The slave is in start-up phase.
2	1:	The bit in the DP slave is always "1".
3	1:	Response monitoring has been enabled for this DP slave.
4	1:	The DP slave has received the "FREEZE" control command.
5	1:	The DP slave has received the "SYNC" control command.
6	0:	The bit is always at 0.
7	1:	The DP slave is deactivated, that is, it has been removed from the current processing.

Station status 3

Table 8-4 Structure of station status 3 (Byte 2)

Bit	Meaning	
0 to 6	0:	The bits are always at "0".
7	1:	There are more channel-related diagnostic messages than can be represented in the diagnostic frame.

8.3.3 Master PROFIBUS address

Definition

The PROFIBUS address of the
DP master is stored in the master PROFIBUS address diagnostic byte:

- which the DP slave has configured and
- has read and write access to the DP slave.

The master PROFIBUS address is located in byte 3 of the slave diagnosis.

FF_H in byte 3

If the value FF_H in byte 3 is given as the master PROFIBUS address, the DP slave is not configured by the DP master.

8.3.4 Manufacturer ID

Definition

The manufacturer ID contains a code that describes the type of the DP slave.

Manufacturer ID

Table 8-5 Structure of the manufacturer ID (Bytes 4, 5)

Byte 4	Byte 5	Manufacturer ID for
81_H	BB_H	IM 650

8.3.5 Evaluating the slave diagnosis

The following figure shows a procedure for evaluating the slave diagnostics in a systematic manner.

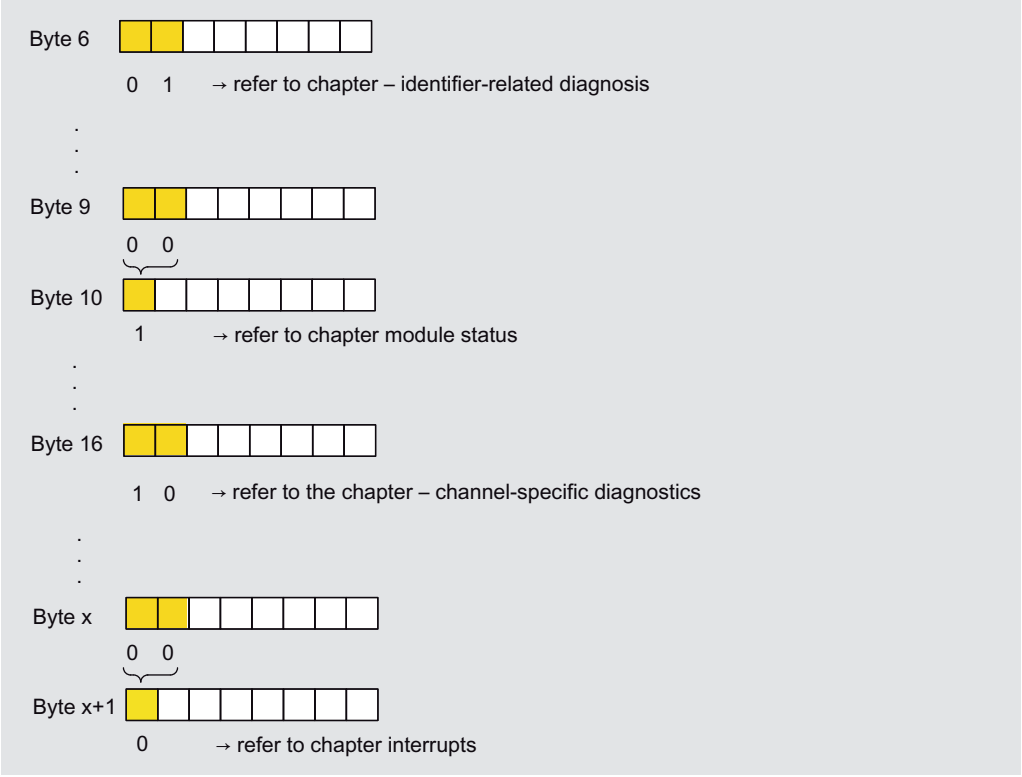

Figure 8-2 Evaluation of the slave diagnostics

8.3.6 Identifier-related diagnosis

Definition

The identifier-related diagnostics indicate whether modules of the ET 200PA SMART are faulty. The identifier-related diagnostics starts at byte 6 and comprises 3 bytes.

Structure of the identifier-related diagnostics

The identifier-related diagnostics for ET 200PA SMART is structured as follows:

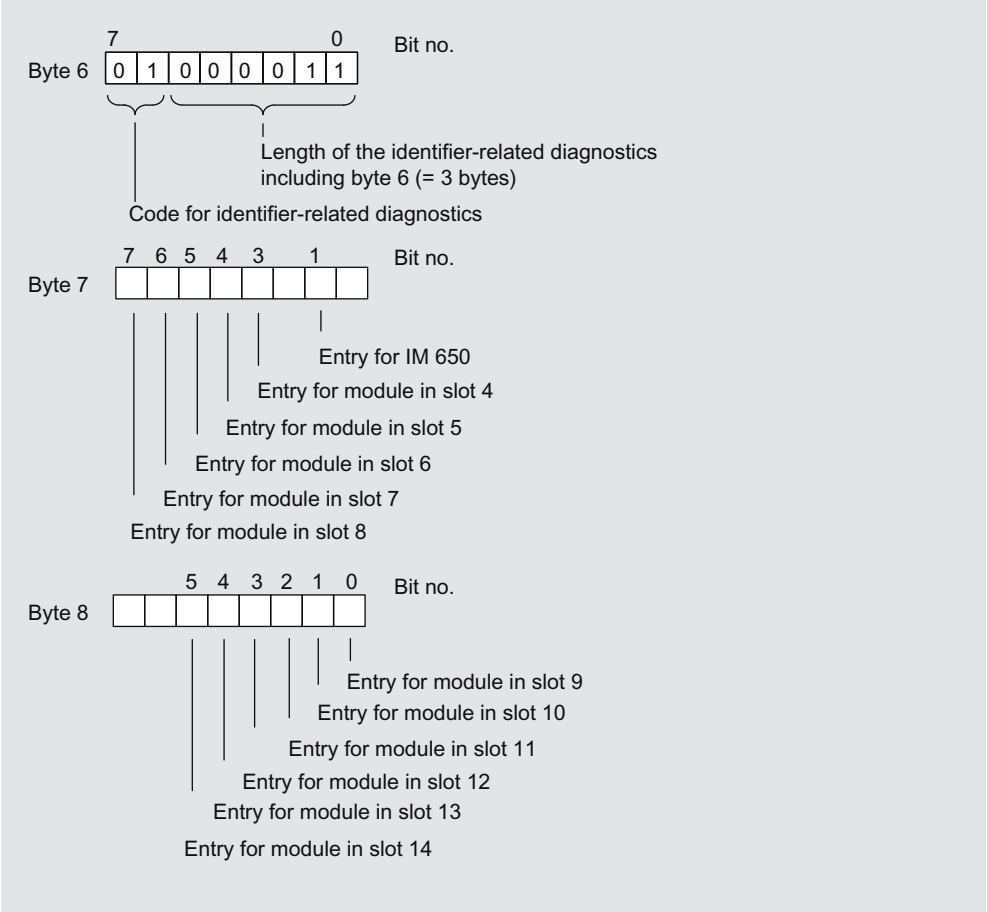

Figure 8-3 Structure of the identifier-related diagnostics

The entry for a module at slot x is set if:

- The module is pulled
- A non-configured module is plugged
- An inserted module cannot be accessed
- The modules signals a diagnostic interrupt
- The ET 200PA SMART is not configured with active bus elements although "Module replacement in runtime" is enabled in the configuration. In this case, the IM 650 sets the bit for all modules of the station.

8.3.7 Module status

Definition

The module status reflects the status of the configured modules and represents a detailing of the identifier-related diagnostics with respect to the configuration. The module status starts after the identifier-related diagnostic data and consists of 8 bytes.

Module status

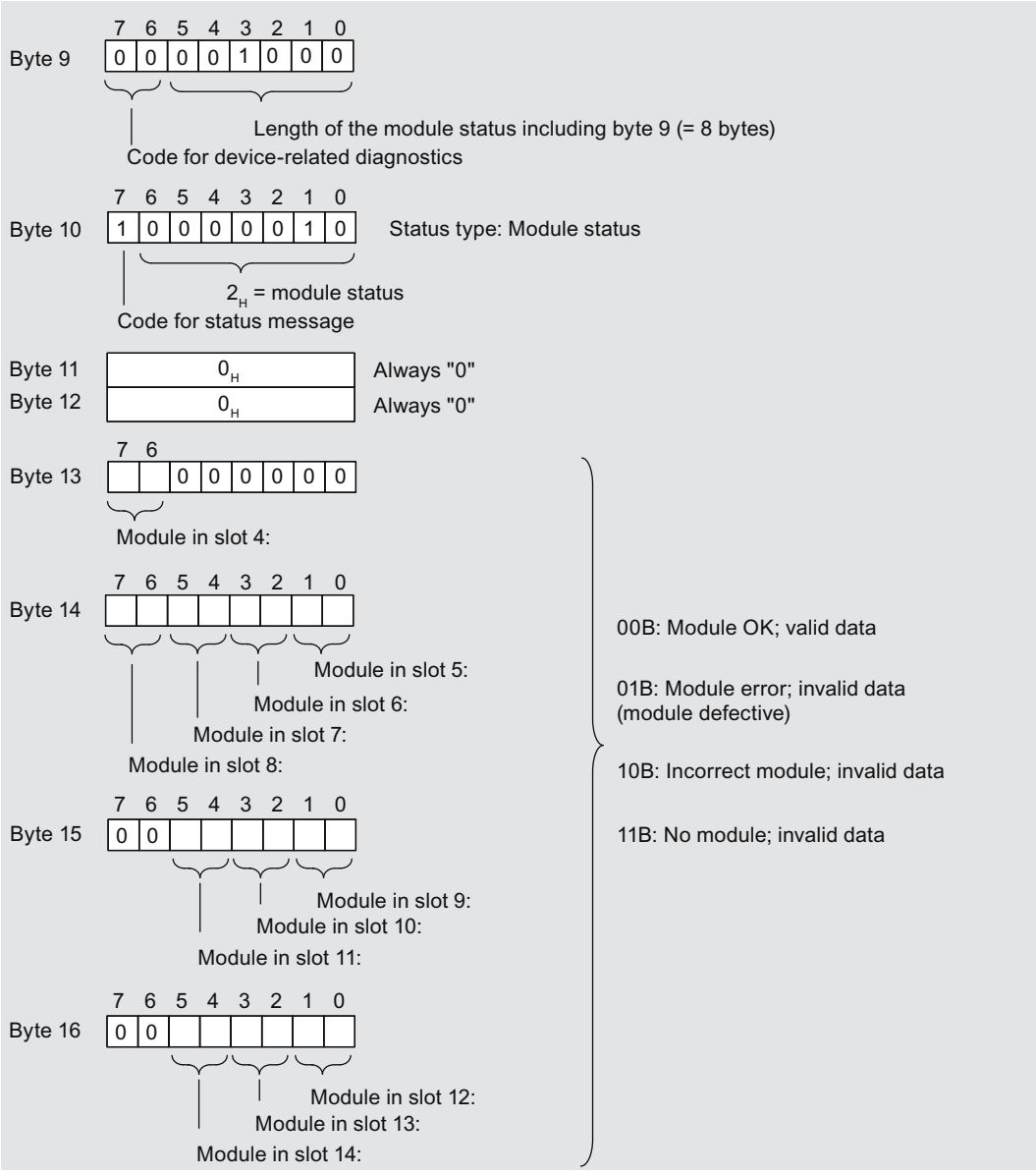

Figure 8-4 Structure of the module status for the ET 200PA SMART

8.3.8 Channel-specific diagnostics

Definition

The channel-related diagnostics gives information about channel errors of modules and represents a detailing of the identifier-related diagnostics.

The channel-related diagnostic information follows the module status.

The channel-related diagnostics does not influence the module status.

Note

Activating the diagnostic interrupt

The diagnostic interrupt must be activated for each module in the parameter assignment dialog of the respective module!

Channel-related diagnostics

The maximum number of channel-related diagnostics is limited by the maximum total length of the slave diagnostics of 96 bytes. The length of slave diagnostic data is determined by the number of currently pending channel-related diagnostics.

Note

Errors that affect all the channels of a module (e.g. the supply voltage of the module fails) will be mapped onto channel 0 in the channel-related diagnostics.

This then reduces the number of channel-related diagnoses and prevents a "diagnostic overflow".

Structure of the channel-related diagnostics

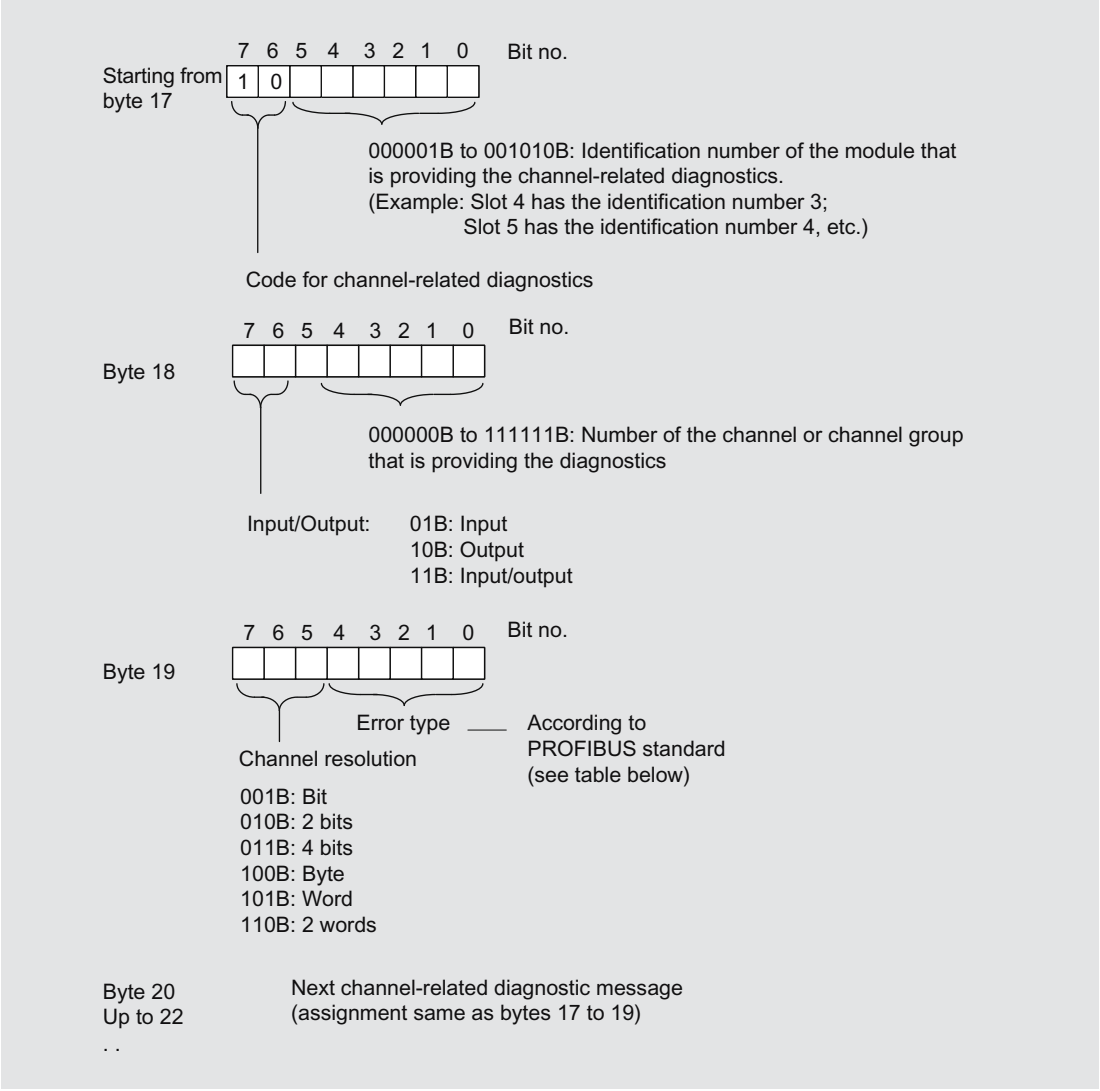

Figure 8-5 Structure of the channel-related diagnostics

Overflow of channel-related diagnoses

If there are more channel-related diagnostics pending than can be shown in the slave diagnostics, then bit 7 "diagnostics overflow" is set in the station status 3.

The channel-related diagnostics that are not transferred with the frame are not lost. They move up into the slave diagnostics as soon as other channel-related diagnostic entered up to now in the diagnostic frame have gone.

Once the "diagnostics jam" has been worked off, bit 7 "Diagnostic overflow" is reset.

Channel-related error messages

Table 8-6 Error type of the channel-related diagnostics in accordance with the PROFIBUS standard

Error type		Error text	Meaning	Remedy
00000_B	0_D	Reserved		
00001_B	1_D	Short-circuit	Short-circuit, e.g.: • Sensor cable short-circuited to P potential • Sensor cable short-circuited to M potential • Output cable short-circuited to P potential • Output cable short-circuited to M potential • Output cable short-circuited to ground	Correction of the process wiring, M circuit, P circuit
00010_B	2_D	Undervoltage	Supply voltage is below the tolerance range	Correction on the power supply
00011_B	3_D	Overvoltage	Supply voltage is above the tolerance range	Correction on the power supply
00100_B	4_D	Overload	The output stage is overloaded	Correction tuning of module/actuator
00101_B	5_D	Overtemperature	The output stage is overloaded and is becoming too hot	Correction tuning of module/actuator
00110_B	6_D	Wire break	Wire break, e.g.: • Signal line to a sensor interrupted • Signal line from an actuator interrupted • Sensor power line interrupted	Correction of the process wiring
00111_B	7_D	High limit exceeded	Value is above the overrange	Correction tuning of module/actuator
01000_B	8_D	Low limit violation	Value is below the underrange	Correction tuning of module/actuator
01001_B	9_D	Error	Error, e.g.: • Load voltage on output • Sensor supply • Hardware error in the module • Contactor welded or jammed • Life span of the switching element reached	Replace the module
01010_B to 01111_B	10_D to 15_D	Reserved		

Table 8-7 Error type of the channel-related diagnostics - manufacturer-specific

Error type		Error text	Meaning	Remedy
10000_B	16_D	Parameter assignment error	Parameter assignment error, e.g.: • Module cannot use the parameter (unknown, invalid combination, etc.) • Module parameters not assigned • User calibration does not correspond to the parameter assignment • Calibration error	Correction of the parameter assignment
10001_B	17_D	No sensor or load voltage	The following voltages can be missing: • External supply voltage • Voltage for operation of the module	Correction of the process wiring
10010_B	18_D	Fuse defective	The user-replaceable fuse has blown	Replace the fuse
10011_B	19_D	Communication error	General communication error For HART modules: Communication error with the HART field device	Check the HART field device, check the wiring
10100_B	20_D	Ground error	Ground error (common mode error) e.g.: • The permissible common mode voltage has been exceeded in the case of non-isolated channels • The M line is broken in the case of isolated channels	Correction of the process wiring
10101_B	21_D	Reference channel fault	Error on the reference channel	Replace the reference channel module
10110_B	22_D	Hardware interrupt lost	At least one hardware interrupt could not be signaled For HART modules: Additional status information of the HART field device is available	Correction tuning of program/ process/module
10111_B	23_D	Warning	There could be a warning, if limit values like: • Speed • Load current are exceeded For HART modules: Maintenance request of the HART field device	Correction tuning of program/ process/module
11000_B	24_D	Tripping	Tripping can be, for example: • Circuit breaker has tripped due to short-circuit, asymmetry, ground fault • Thermistor has tripped	Eliminate the cause of tripping and acknowledge, if necessary
11001_B	25_D	Safety-oriented tripping	Trigger/cause for safety-related tripping is pending	Eliminate the cause of tripping
11010_B	26_D	External error	External (process-side) error, e.g.: • Sensor error • Actuator error • Sensor data is incorrect For HART modules: Malfunction of the HART field device	Replace sensor/ actuator/ correct process wiring

Error type		Error text	Meaning	Remedy
11011_B	27_D	Unclear error	Unclear errors are those that cannot be specified in more detail For HART modules: “Configuration Changed” signaled by the HART field device	Different, depending on cause of error
11100_B	28_D	Reserved		
11101_B	29_D	Error 1 in actuator/sensor	Error 1 in a field device that is connected to a module For HART modules: HART primary variable outside the limits	Correction in actuator/sensor depending on error message
11110_B	30_D	Error 2 in actuator/sensor	Error 2 in a field device that is connected to a module For HART modules: At least one HART secondary variable outside the limits	Correction in actuator/sensor depending on error message
11111_B	31_D	Channel/ module temporarily unavailable	e.g. due to calibration, firmware update, manual mode, etc.	Different, depending on the cause; e.g., wait until the initiated function (calibration, FW update) is finished.

See also

Structure of slave diagnosis (Page 91)

8.3.9 H-status, only in redundant configurations

Requirement

The IM 650 supplies the H-status only when it is operated on a CPU 410 in a redundant configuration.

Structure of the H-status

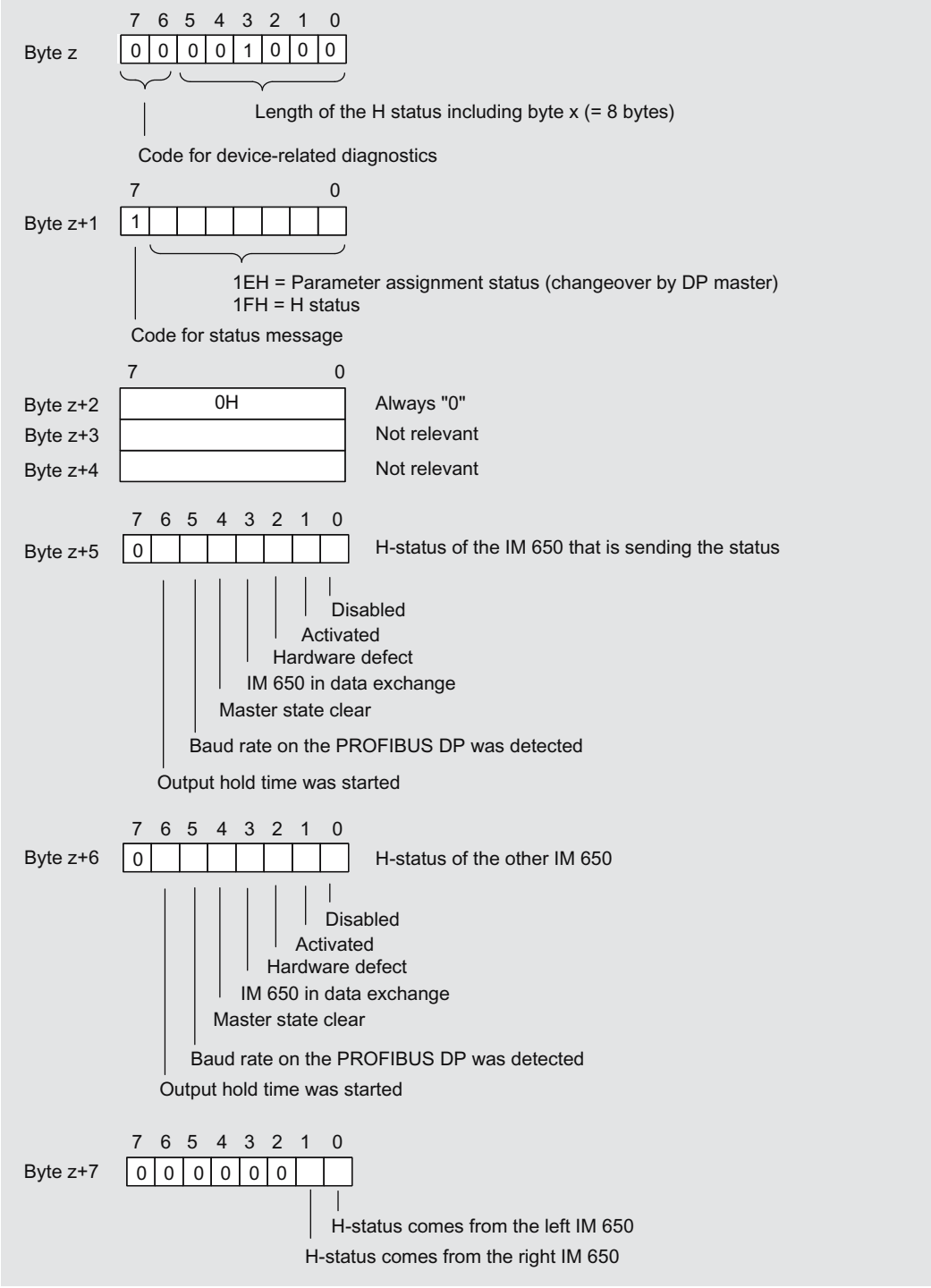

Figure 8-6 Structure of the H-status

8.3.10 Interrupts

Definition

The interrupt section of the slave diagnostic information contains information about the interrupt type and the cause of the interrupt that triggered the slave diagnostic information.

The interrupt section consists of a maximum of 29 bytes. A maximum of 1 interrupt can be signaled per slave diagnostic information.

Position in the diagnostic frame

The position of the interrupt section in the slave diagnostic data depends on the number of channel-related diagnostics. The interrupt section is always the last section in the diagnostic frame

Contents

The content of the interrupt information depends on the interrupt type:

For **diagnostic interrupts**, the diagnostic data record 1 for SIMATIC S7 (e.g. 16 bytes) is sent as additional interrupt information (starting from byte x+4). For digital and analog modules, you can find the meaning of these bytes in the figures below.

For **hardware interrupts**, the length of the additional interrupt information is 4 bytes. The meaning of these bytes can be found in the following figures. For end of cycle interrupts, these bytes are always FF_H.

For **plug/pull interrupts** the length of the additional interrupt information is 5 bytes. The meaning of these bytes can be found in the following figures.

Plug/pull interrupt, module replacement in runtime

The ET 200PA SMART is configured with active bus elements. By activating the “Module replacement in runtime” parameter, you enable the signaling of plug/pull module events of the IM 650 via plug/pull interrupts.

If you disable “Module replacement in runtime”, these events are only mapped onto the identifier-related diagnostics and the module status.

Diagnostic interrupt

If there is a diagnostic event for channel/channel group 0 of a module, there may **also** be a module fault in addition to a channel fault. In this case, the entry is generated even if you have not enabled the specific channel diagnostics for channel/channel 0 of the module.

Structure of the interrupt section

The interrupt section of the ET 200PA SMART is structured as follows:

The bytes x to x+3 inform you of the **interrupt type**.

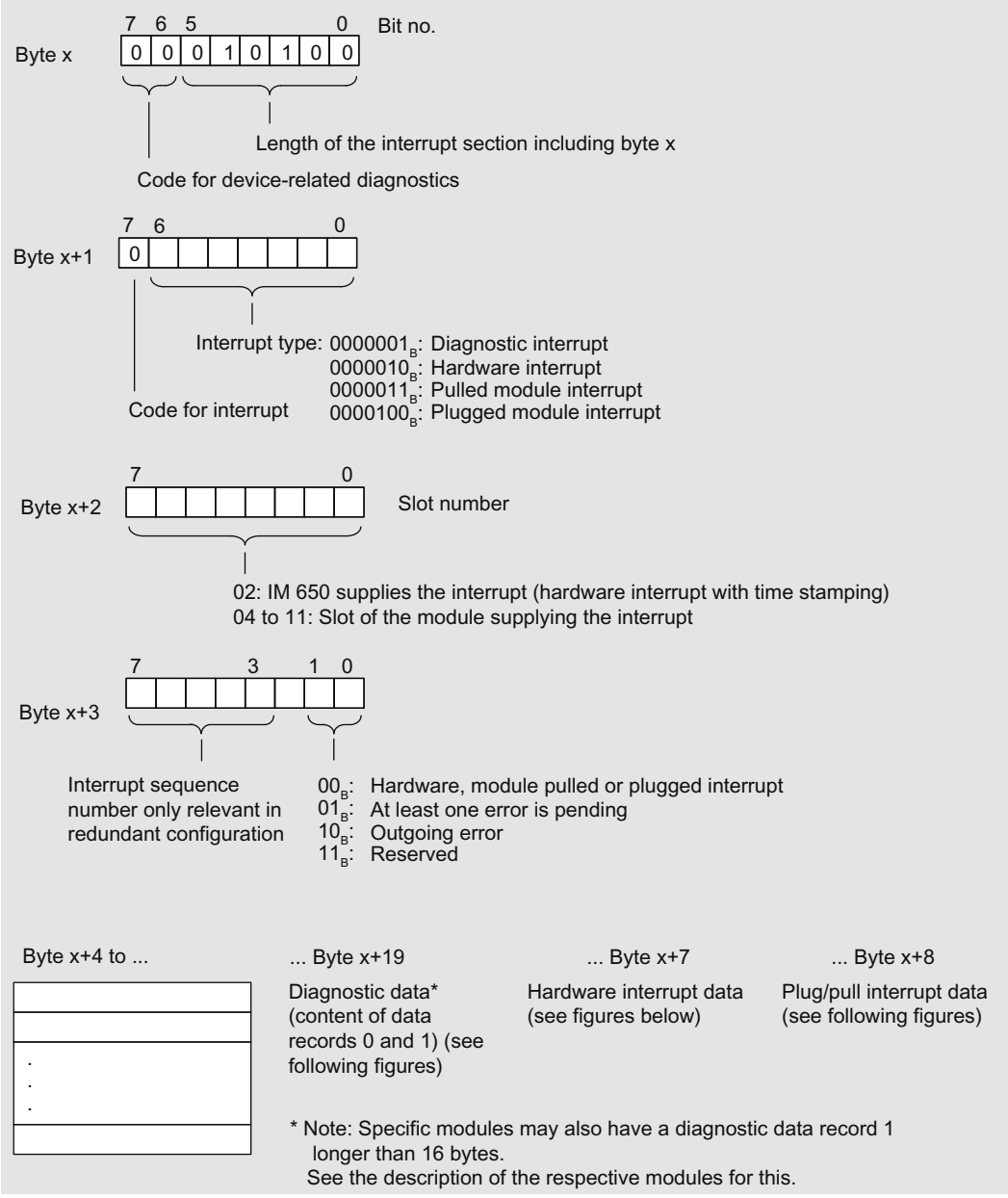

Figure 8-7 Structure of the interrupt status of the interrupt section

Additional interrupt information

The bytes x+4 to x+7 inform you of the **interrupt cause**. They correspond to the S7 **diagnostic data record 0** of the corresponding module.

Bytes x+4 to x+7 and x+8 to x+19 correspond to the S7 **diagnostic data record 1**. For specific modules, e.g., the HART modules, this is longer and goes to byte x+27.

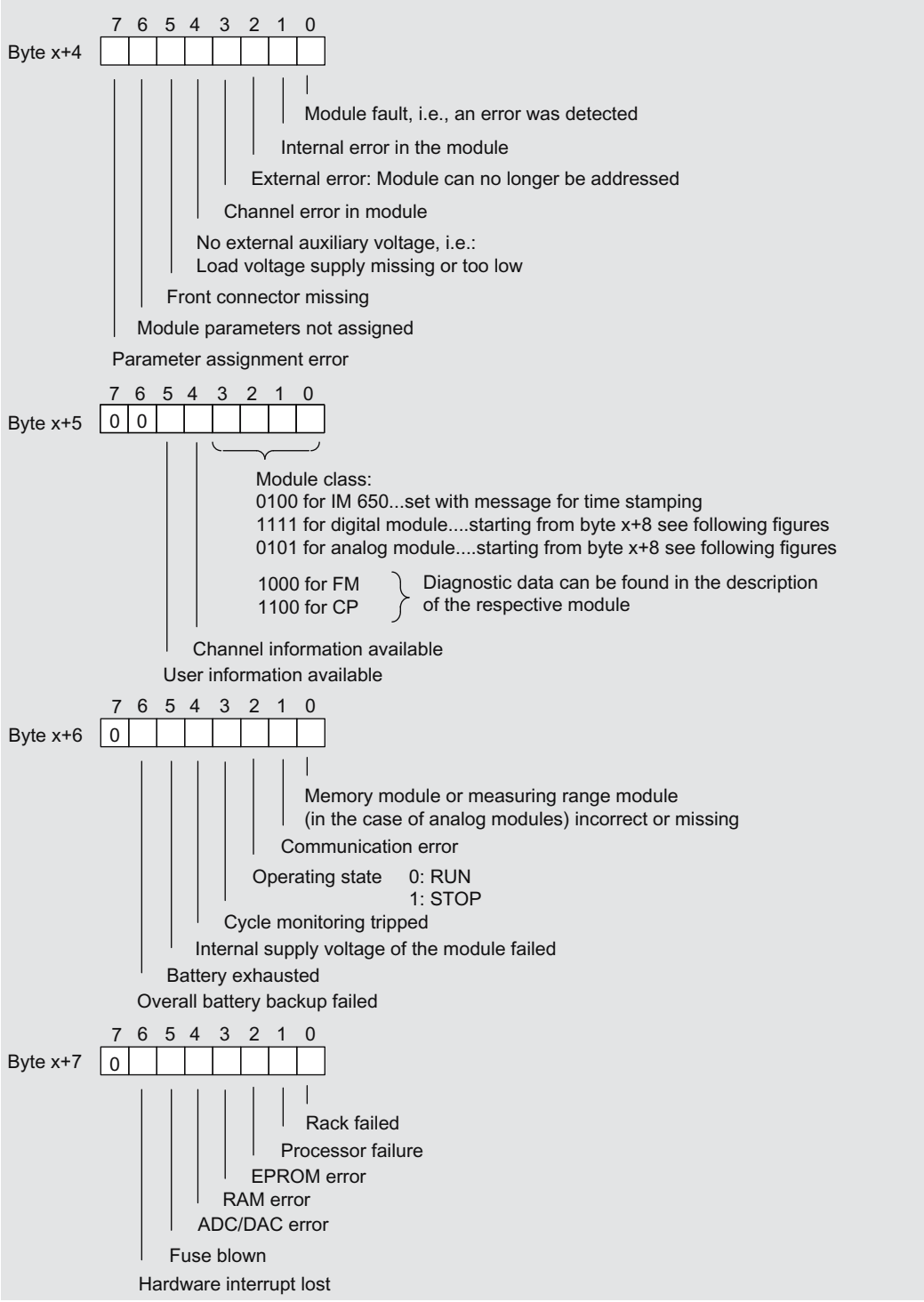

Figure 8-8 Additional interrupt information for diagnostic interrupt of digital and analog modules

Interrupt details

The bytes starting from x+8 inform you of the **interrupt details**. Interrupt details of modules whose identifiers (byte x+8) are not listed here can be obtained from the respective module documentation.

Note

The channel fault vector (byte x + 11) has a length of at least 1 byte. For modules with more than 8 channels, the channel fault vector occupies multiple bytes accordingly.

If another channel type is present, the first diagnostic data record is followed by an identically structured record for the next channel type.

Interrupt details of modules with digital inputs

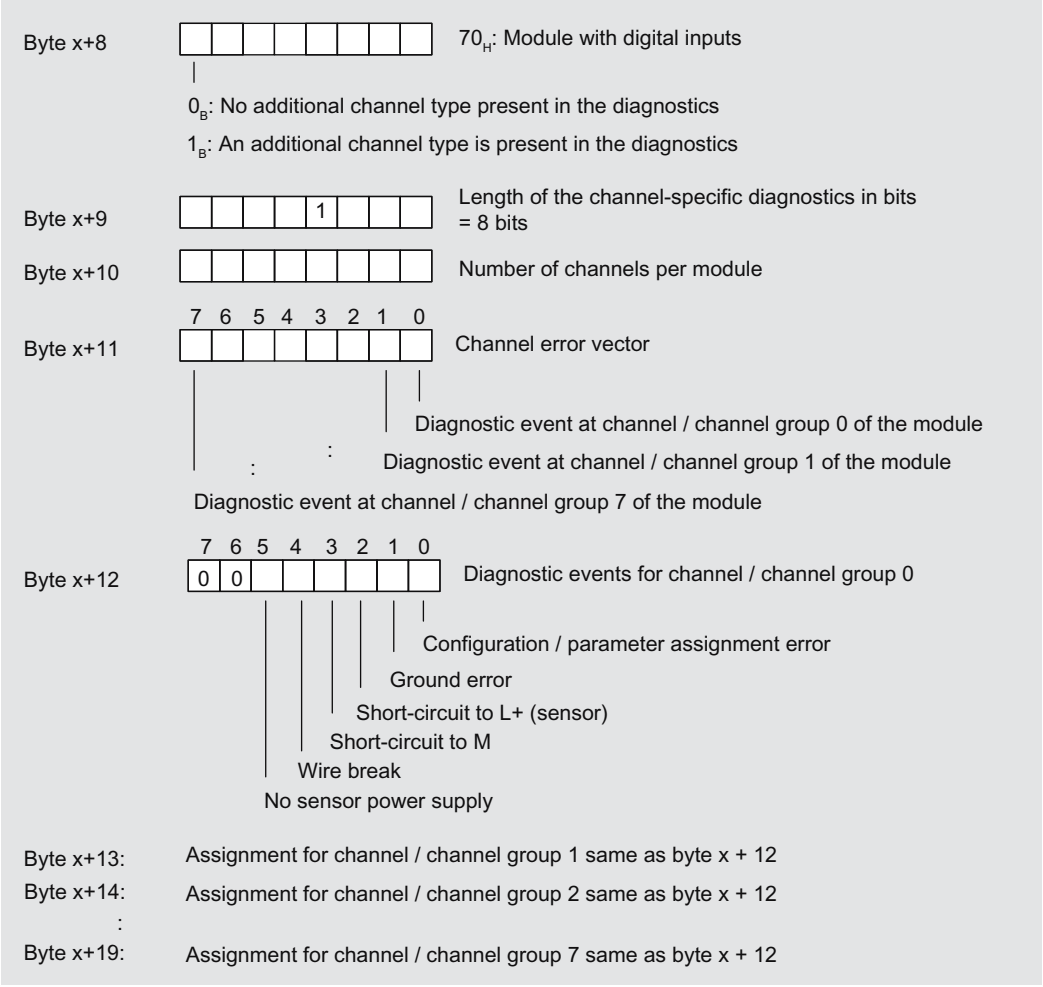

Figure 8-9 Structure starting from byte x+8 for diagnostic interrupt (digital inputs)

Interrupt details of modules with digital outputs

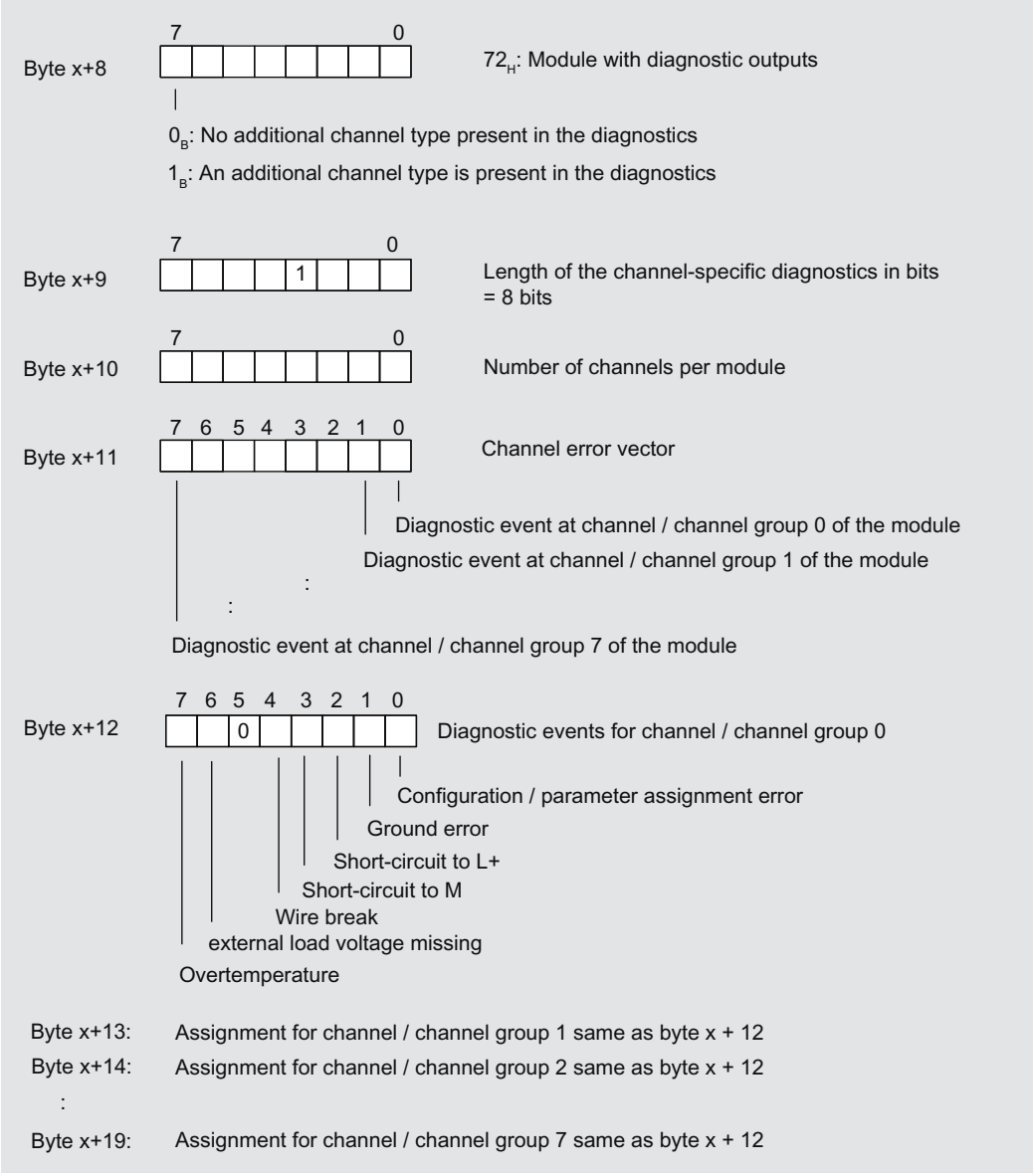

Figure 8-10 Structure starting from byte x+8 for diagnostic interrupt (digital outputs)

Interrupt details of modules with analog inputs

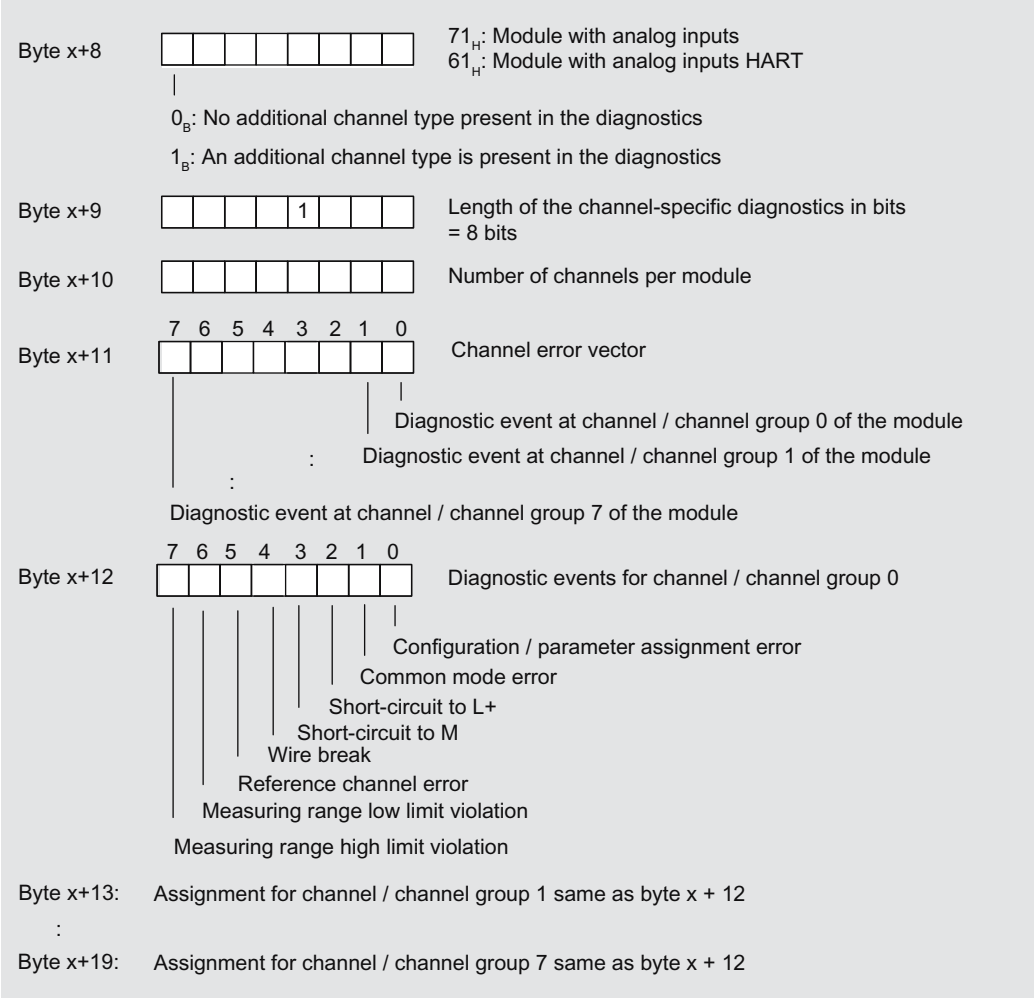

Figure 8-11 Structure starting from byte x+8 for diagnostic interrupt (analog inputs)

Interrupt details of modules with analog outputs

For modules with less than 8 channels/channel groups, the corresponding bytes for diagnostic events for channel/channel group of the channels/channel groups not present are always 00H.

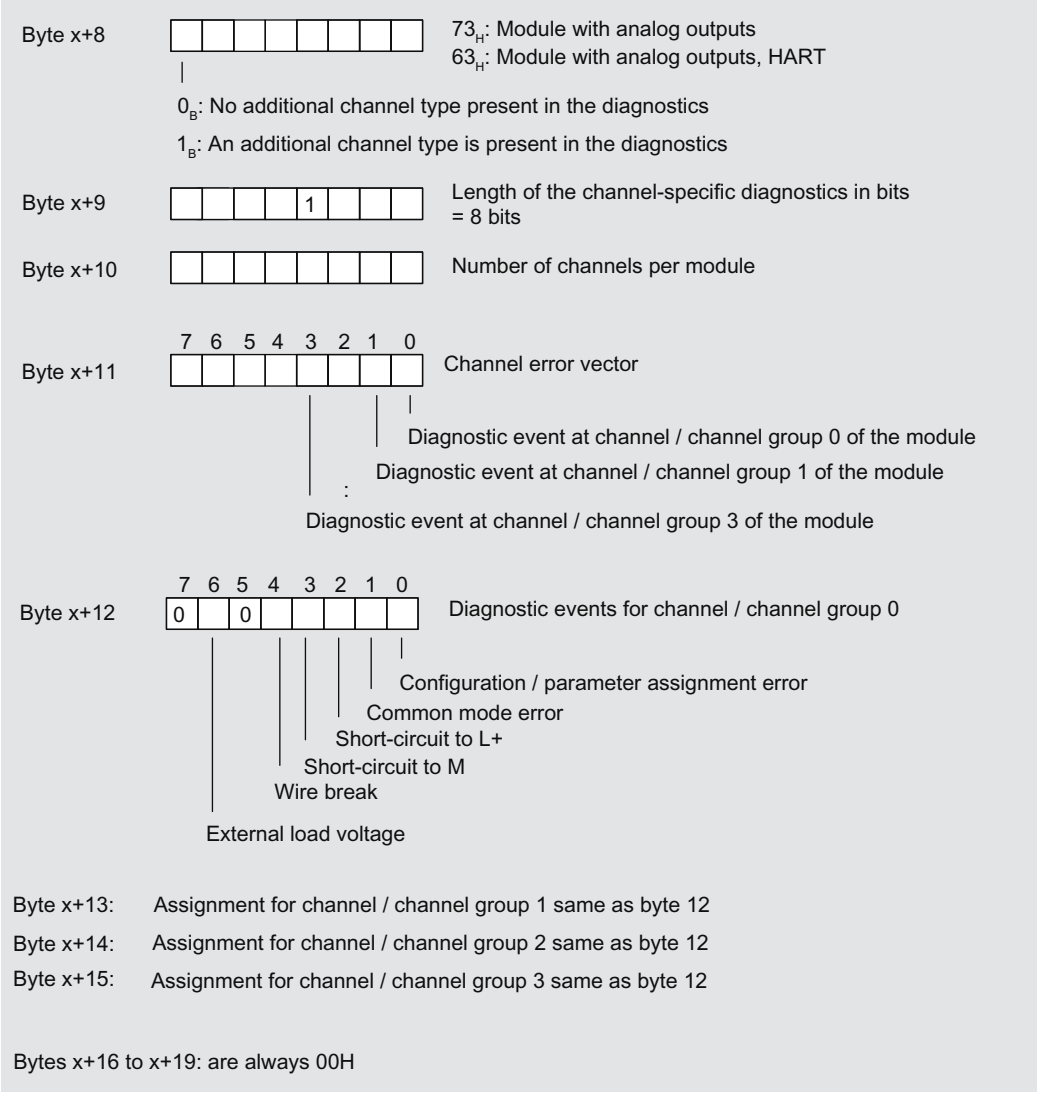

Figure 8-12 Structure starting from byte x+8 for diagnostic interrupt (analog outputs)

Interrupt details of input or output modules with HART

For modules with 8 channels, the diagnostic events for channel 4...7, thus bytes x+20 to x+27 are present.

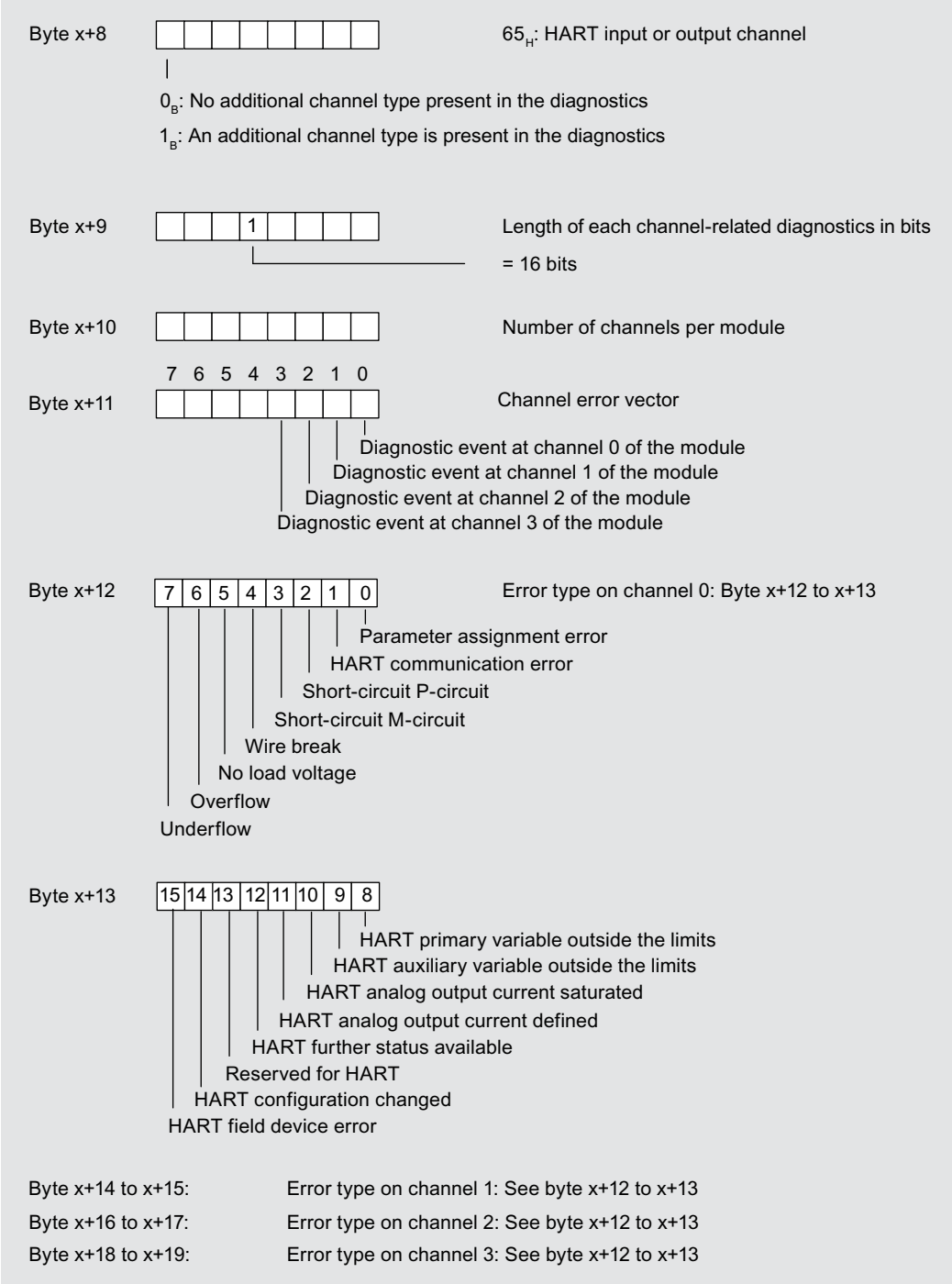

Figure 8-13 Structure starting from byte x+8 for diagnostic interrupt (input or output modules with HART)

Hardware interrupt with time stamping of digital input signals

If the IM 650 signals a hardware interrupt (slot number in byte x+2 = 2), at least 1 data record with messages about time stamped signal changes or about special messages is present.

The data record can be read and evaluated with the PCS 7 blocks for processing time-stamp signals (see *PCS 7* documentation).

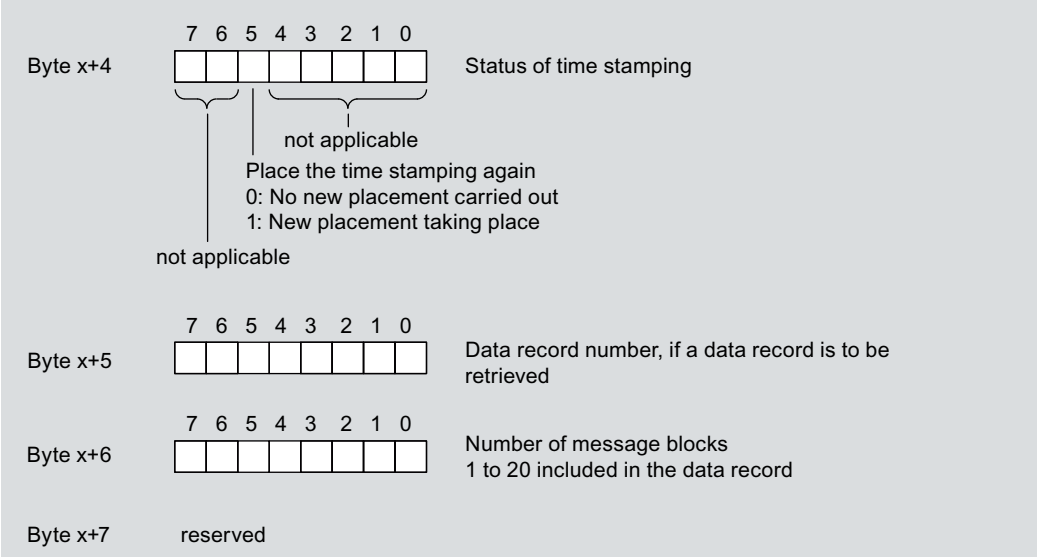

Figure 8-14 Structure starting from byte x+4 for hardware interrupt (time stamping)

Hardware interrupt of analog input modules

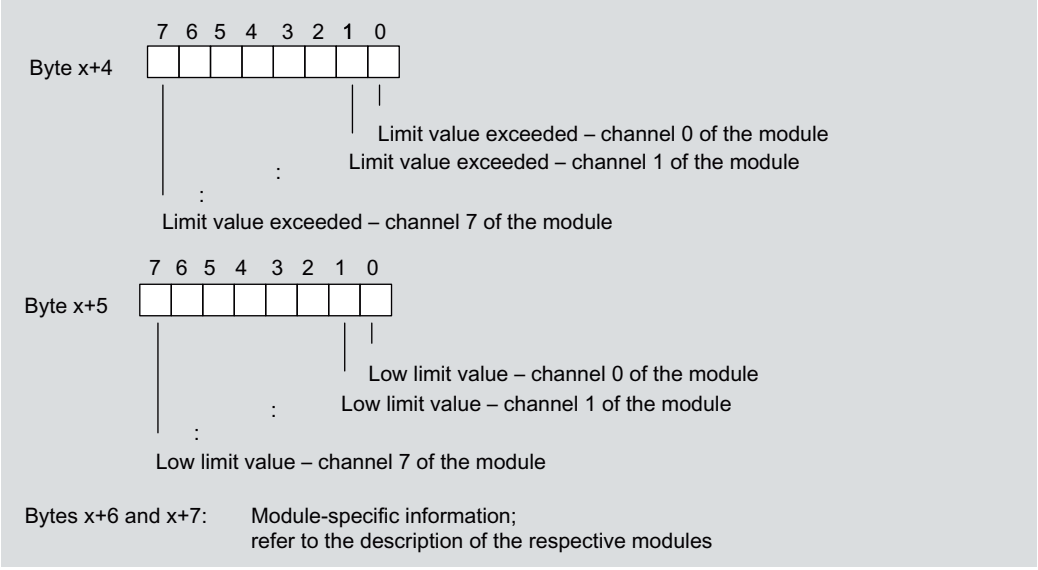

Figure 8-15 Structure starting from byte x+4 for hardware interrupt (analog inputs)

Hardware interrupt of digital input modules

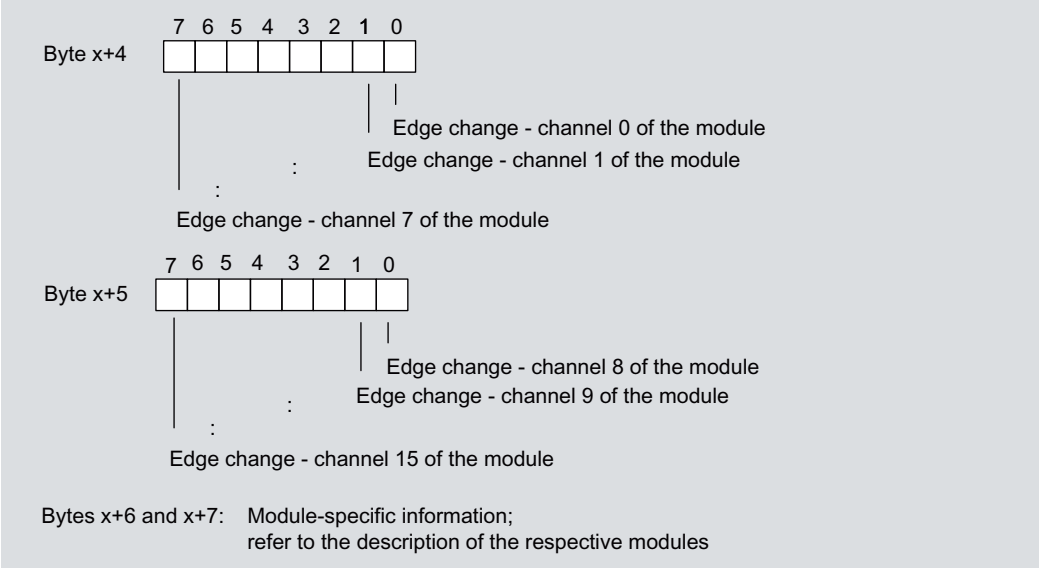

Figure 8-16 Structure starting from byte x+4 for hardware interrupt (digital inputs)

Plug/pull interrupt

You can identify whether the module has been plugged or pulled from the interrupt type in byte x+1.

Bytes x+4 to x+8 contain an internal identifier (module identifier) of the module that was plugged or pulled.

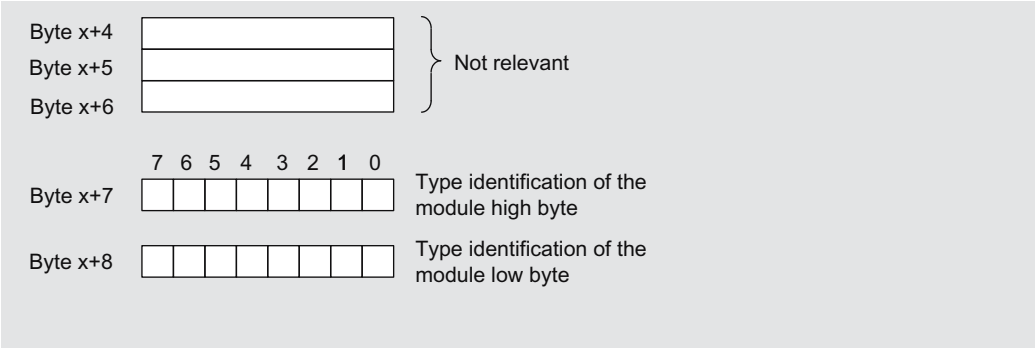

Figure 8-17 Structure starting from byte x+4 for plug/pull interrupt

See also

Structure of slave diagnosis (Page 91)

Arrangement of the modules for the function "Change During Operation" and / or "Redundancy" (Page 20)

8.3.11 Evaluating interrupts of device-related diagnostics

The structure of the device-related diagnostics is the same as the structure of the interrupt section.

Interrupts

The ET 200PA SMART supports the following interrupts:

- Diagnostic interrupt
- Plug/pull interrupt

You can evaluate these interrupts in the DP master. In the event of an interrupt, interrupt OBs run automatically in the master CPU (refer to the "System and Standard Functions for S7-300/400 (http://support.automation.siemens.com/WW/view/en/1214574)" programming manual).

Plug/pull interrupt

Plugging and pulling of modules in an ET 200PA SMART system is only possible when the "Module replacement in runtime" parameter is enabled. If a module is pulled when the "Module replacement in runtime" parameter is not enabled, the complete ET 200PA SMART station fails.

If you are using the ET 200PA SMART with the "Module replacement in runtime" parameter enabled, the system behaves as follows:

- When a module is pulled, the IM 650 signals a pulled interrupt to the DP master, which executes OB 83. You program the desired response to the module pulled event in OB 83. In case of I/O access, OB 122 (I/O access error) is called in the DP master CPU.
- If you plug in a module that matches the configuration, the IM 650 signals a plugged interrupt to the DP master (call of OB 83 with corresponding diagnostic buffer entry) and assigns the module parameters in accordance with the saved configuration.
- If you plug a module into a non-configured slot or a module that does not match the configured module, the IM 650 signals a plugged interrupt but ignores the inserted module.
  - The identifier-related diagnostics enables you to read the slot in which the wrong module is plugged.
  - The IM 650 indicates the error via the SF LED.

Note

Disturbances from module removal and insertion are tolerated for up to 1 second. This means that if this type of disturbance occurs, the output values are not changed within the tolerance time.

Backing up the diagnostics

Depending on byte x+1, transfer the content of the device-related diagnostics for the following reasons to a data block

- The interrupts are updated cyclically.
- The content of the diagnostics starting from byte x+3 depends on whether a diagnostic interrupt, hardware interrupt, or plug/pull interrupt is signaled.

Note

In order to evaluate diagnostic interrupts and hardware interrupts via the device-related diagnostics, you must regularly query the corresponding bits in the device-related diagnostics in your user program.

See also

Identifier-related diagnosis (Page 96)

Interrupts (Page 105)

Interface module IM 650

9

Technical specifications

This section provides information on the following:

- The parameters of the IM 650 interface module
- The technical specifications of the IM 650 interface module
- Specifications regarding typical response times of an ET 200PA SMART station
- The dimension drawing of the IM 650 interface module
- The block diagram of the IM 650 interface module

ET 200 PA SMART modules

Information about the technical specifications and block diagrams of the ET 200PA SMART modules as well as the corresponding dimension drawing can be found in the description of the respective I/O module in section 10.

Reference Manual

The "S7-300 automation system, module specifications (http://support.automation.siemens.com/WW/view/en/8859629)" reference manual contains the following for the modules from the S7-300 series of modules:

- The technical specifications
- The general technical specifications, such as specifications for noise immunity of the modules as well as mechanical and climatic ambient conditions.

9.1 Parameters of the IM 650

Parameter assignment

You assign the parameters of the IM 650 or ET 200PA SMART via the parameter assignment dialog of *HW Config*.

Table 9-1 Parameters of the IM 650

Parameter	Value range	Default setting	Scope
Start up at preset ≠ actual configuration?	Yes / No	Yes	ET 200PA SMART
"Module replacement in runtime"?	Yes / No	Yes	ET 200PA SMART

Parameter	Value range	Default setting	Scope
Time synchronization	Yes / No	No	ET 200PA SMART
Synchronization interval	1 s to 60 s The value must correspond to the setting in the time-of-day master	10 s	ET 200PA SMART

Parameters for time stamping

Assign the parameters for time stamping with *HW Config* in the DP slave properties and in addition for the respective digital input modules in the module properties.

Table 9-2 Parameters for time stamping

Parameter	Value range	Default setting	Scope
Time stamping	Yes / No	No	S7-300 module / channel
Edge evaluation	Rising edge / Falling edge	Rising edge	S7-300 module / channel

9.2 Technical specifications of the IM 650

Technical specifications	IM 650
Manufacturer ID	$81BB_H$
Dimensions and weight	
Dimensions W x H x D (mm)	40 x 125 x 117
Weight, approx.	360 g
PROFIBUS DP interface	
Baud rates	Up to 12 Mbaud
Baud rate search	Yes
Interface	RS 485
FREEZE capability	Yes
SYNC capability	Yes
PROFIBUS addresses	1 to 125 permissible
Plant changes in runtime	Yes
Time synchronization / time stamping	Yes
• Accuracy class	10 ms / 1 ms
• Time resolution	466 ps
• Number of digital input signals	Max. 128, max. 32 per slot
• Message buffer	15 message buffers with max. 20 messages each
• Time interval for sending the message buffers when there is a message	1 s

Technical specifications	IM 650
• Time stamp	• Per digital input • Per digital input module • Entire ET 200PA SMART
• Time stamp in the case of	Rising/falling edge as incoming or outgoing signal
• Time format	RFC 1119 Internet (ISP)
Voltages, currents, electrical potentials	
Rated voltage	24 V DC (20.4 to 28.8 V DC)
Current consumption from 24 V	Max. 650 mA
Inrush current	3.0 A
Power on the I/O bus (to supply the I/O modules)	Max. 1.5 A
I^2t	0.1 A^2s
Recommended external fusing for supply cables	In a configuration with grounded reference potential a fuse is required for redundant interface modules (recommendation: 2.5 A).
Power loss, typ.	5.5 W

Dimension drawing for IM 650:

You can find a dimension drawing with the rail for the active bus modules in the "S7-300 automation system, module specifications (http://support.automation.siemens.com/WW/view/en/8859629)" Reference Manual.

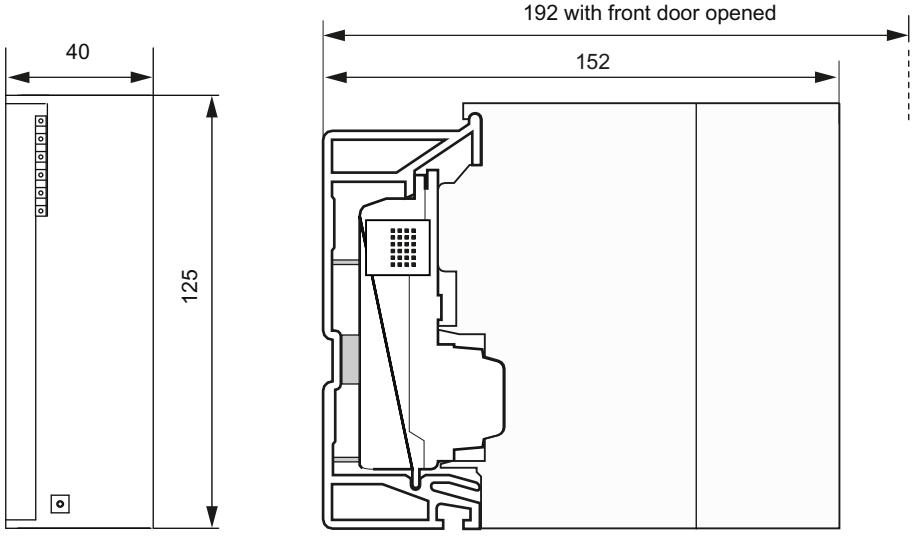

Figure 9-1 Dimension drawing for IM 650

Block diagram for IM 650

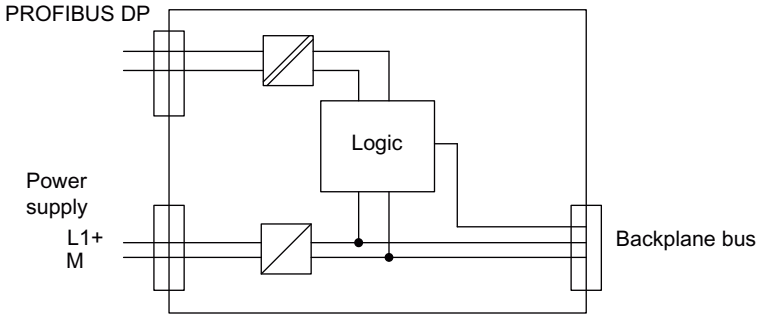

Figure 9-2 Block diagram for IM 650

9.3 Response time of the ET 200PA SMART

Definition of response time

The response time is the time between detection of an input signal and the modification of a linked output signal.

Duration

The response time depends on the bus configuration and on the DP master.

Factors

The response time for the ET 200PA SMART depends on the following factors:

- Processing of the data by the ET 200PA SMART
- Delay of the inputs and outputs (refer to the "S7-300 automation system, module specifications (http://support.automation.siemens.com/WW/view/en/8859629)" Reference Manual.

ET 200PA SMART

The time for processing the data within the ET 200PA SMART has a typical value of 1 ms. During this time, the data is processed in the IM 650 and the data is transferred between the IM 650 and the inserted modules.

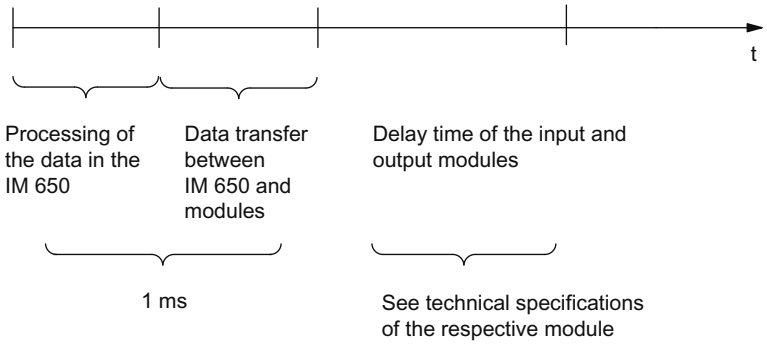

Figure 9-3 Response time of the ET 200PA SMART

Switchover time for redundancy

The switchover time is approximately 30 ms. If the watchdog time is set greater than 30 ms or 70 ms, the switchover time corresponds to the set monitoring time.

Delay time of the input/output modules

The delay time of the input/output modules can be obtained from the technical specifications of the modules.

For modules from the S7-300 range of modules see reference manual "S7-300 automation system, module specifications (http://support.automation.siemens.com/WW/view/en/8859629)".

9.4 Use of the ET 200PA SMART in hazardous area zone 2

See product information "Use of subassemblies / modules in a zone 2 hazardous area (http://support.automation.siemens.com/WW/view/en/28017422)".

ET 200PA SMART I/O modules 10

10.1 Module overview

The following I/O modules are available in the ET 200PA SMART system:

Module	Article no.	Article no. (with conformal coating)
Digital input module DI16xDC24V	6ES7650-8DK70-0AA0	6ES7650-8DK70-1AA0
Digital input module DI32xDC24V	6ES7650-8DK80-0AA0	6ES7650-8DK80-1AA0
Digital output module DO16xDC24V/0.5A	6ES7650-8EK70-0AA0	6ES7650-8EK70-1AA0
Digital output module DO32xDC24V/0.5A	6ES7650-8EK80-0AA0	6ES7650-8EK80-1AA0
Analog input module AI8x13Bit	6ES7650-8AE60-0AA0	6ES7650-8AE60-1AA0
Analog input module AI8x16Bit	6ES7650-8AK60-0AA0	6ES7650-8AK60-1AA0
Analog input module AI16x16Bit	6ES7650-8AK70-0AA0	6ES7650-8AK70-1AA0
Analog input module AI8xTC/4xRTD	6ES7650-8AR60-0AA0	6ES7650-8AR60-1AA0
Analog input module AI 8 x 16-bit HART[1]	6ES7650-8AT60-0AA0	6ES7650-8AT60-1AA0
Analog output module AO8x12Bit	6ES7650-8BK60-0AA0	6ES7650-8BK60-1AA0
Analog output module AO 8 x 16-bit HART[1]	6ES7650-8BT60-0AA0	6ES7650-8BT60-1AA0

[1] Available as of PCS 7 V9.0 SP2 and the corresponding update collection

In addition to the ET 200PA SMART I/O modules specified in this table, the following modules can also be used in an ET 200PA SMART system.

- Numerous S7-300 standard I/O modules and HART analog modules that are also approved for use in an ET 200PA SMART in the list of released modules PCS 7 (as of V8.1).
- Numerous counter modules and point-to-point couplings which are also approved for use in an ET 200PA SMART in the list of released modules PCS 7 (as of V8.1).

If you are using modules from the S7-300 series of modules, you can find information for them in the following manuals:

- Automation System S7-300, Module Data (http://support.automation.siemens.com/WW/view/en/8859629)
- ET 200M, Signal Modules for Process Automation (http://support.automation.siemens.com/WW/view/en/7215812)
- ET 200M Distributed I/O Device HART Analog Modules (http://support.automation.siemens.com/WW/view/en/22063748)

Note

The ET 200PA SMART I/O modules function only in an ET 200PA SMART station conjunction with an IM 650 interface module.
If the ET 200PA SMART modules are located behind an ET 200M interface module or an S7-300 CPU, the function of the ET 200PA SMART modules is not available. The ET 200PA SMART modules indicate this by a red SF LED (group error LED) flashing at 2 Hz.
The ET 200PA SMART modules do not affect the ET 200M / S7-300 bus. This means other modules of the ET 200M / S7 300 station remain operable without restriction.

Redundant use

All ET 200PA SMART modules can be used redundantly with the following exceptions:

- Analog input module AI 8 x 13 Bit cannot be used in a redundant configuration.
- Analog input module AI8xTC/4 x RTD can only be used in a redundant configuration for voltage measurement and thermocouple measurement. Only with redundant encoders for thermocouple measurement, however.
- Analog output module AO 8 x 12 Bit can only be used in a redundant configuration for current output.

In redundant mode, the modules are present in duplicate and are configured and operated redundantly.

Redundant use is only permitted when using two identical modules (same article number).

You can find additional information on the subject of redundancy in the Automation System S7-400H Fault-Tolerant Systems (http://support.automation.siemens.com/WW/view/en/1186523) manual

Parameter assignment

You configure the modules via the respective parameter assignment dialogs in HW Config. Once you have defined all parameters, transfer the parameters from the programming device to the CPU. The CPU passes the parameters to the respective modules at a change of operating mode from STOP → RUN.

Parameter reassignment in runtime

Parameter reassignment in runtime is possible for all ET 200PA SMART modules.

Input modules do not change the process input value while they are being re-configured.

Diagnostics and diagnostic messages

I/O modules with diagnostic capability have assignable and non-assignable diagnostic messages.

You only receive assignable diagnostic messages if you have enabled the diagnostics using the module-specific parameter assignment dialog of HW Config.

Non-assignable diagnostic messages are always provided by the module regardless of whether the diagnostics is enabled.

Pending diagnostic information is displayed via the group error display (SF LED).

Diagnostic interrupts are only signaled by the I/O modules if "Diagnostic interrupt" is enabled via the respective parameter assignment dialog.

Group error display (SF LED)

The group error display (SF LED) of the ET 200PA SMART modules indicates the following:

- Operation of the ET 200PA SMART module centrally in an S7-300 system or an ET 200M station. In this case, the SF LED flashes at 2 Hz. The ET200PA SMART module is not ready for operation.
  All the remaining modules can be operated without restriction.
- Error state of the respective module in the case of modules with diagnostic capability The SF LED lights up as soon as diagnostic information of a module is detected. It goes out when all causes of the diagnostic information (errors) are eliminated.

Internal module defects are indicated for modules with and without diagnostic capability. The SF-LED lights up when a module defect has been detected.

10.2 Digital input modules

Overview of properties

The table below presents the ET 200PA SMART digital input modules based on their most important properties.

Table 10-1 ET 200PA SMART digital input modules

	Module	
	DI 16 x DC24V	DI 32 x DC24V
Properties	6ES7650-8DK70-xAA0	6ES7650-8DK80-xAA0
Number of inputs	16 Isolated in groups of 16	32 Isolated in groups of 16
Rated input voltage	24 V DC	24 V DC
Suitable for...	2-/3-/4-wire proximity switches (BEROs)	
Configurable diagnostics	Yes	No
Diagnostic interrupt	Yes	No
Adjustable input delays	Yes, for entire module	No

10.2.1 Digital input module DI 32 x DC 24 V

Article numbers

Standard module: 6ES7 650-8DK80-0AA0

Module with conformal coating: 6ES7 650-8DK80-1AA0

Properties of the DI 32xDC24V

The DI 32 x DC 24 V is characterized by the following properties:

- 32 inputs, isolated in groups of 16
- Rated input voltage 24 V DC
- Suitable for switches and 2-/3-/4-wire proximity switches (BEROs)
- Group error display (SF LED)

Wiring and block diagram of the DI 32 x DC 24 V

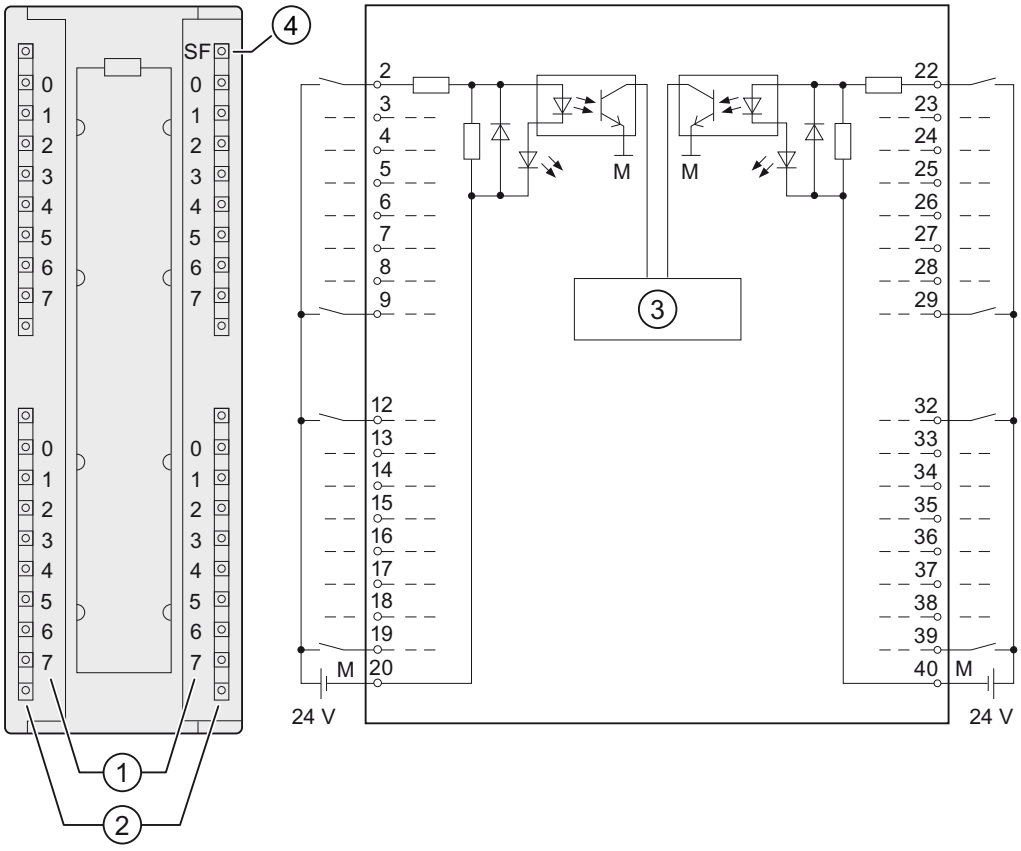

① Channel number
② Status display - green
③ Backplane bus interface
④ Group error display - red (SF LED)

Terminal assignment of the DI 32 x DC 24 V

The figure below shows the assignment of channels to addresses (input byte x up to input byte x+3).

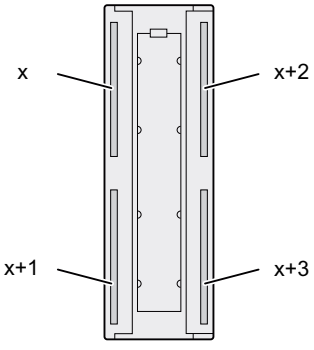

Redundant use

External diodes must also be wired to the inputs so that, for example, no impermissible states are detected when one of the two redundant modules is pulled out.

Suitable diodes include diode types from the 1N4003 to 1N4007 series or any other diode with U_r >=200 V and I_F >= 1 A

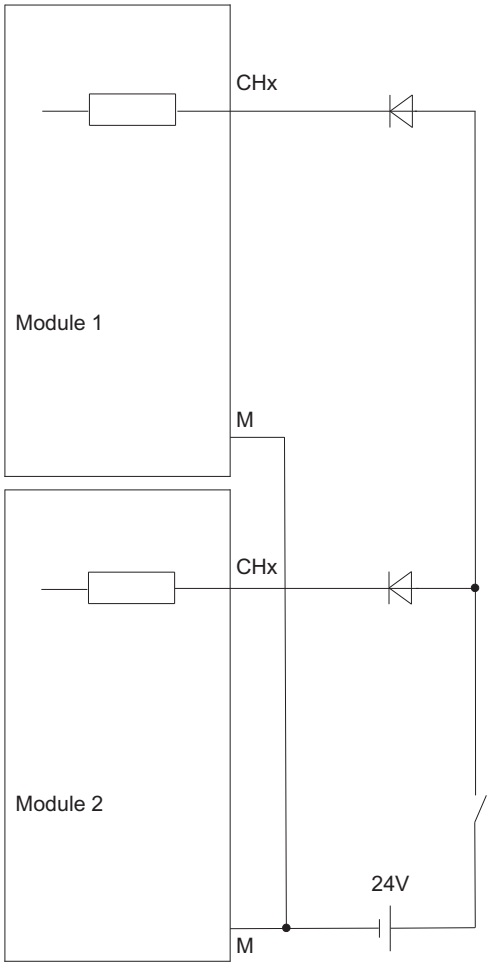

Technical specifications of the DI 32 x DC 24 V

Technical specifications	
Dimensions and weight	
Dimensions W x H x D (mm)	40 x 125 x 120
Weight	Approx. 260 g
Module-specific data	
Number of inputs	32

Technical specifications	
Cable length • Unshielded • Shielded	 Max. 600 m Max. 1000 m
Front connector	40-pin
Voltages, currents, potentials	
Number of simultaneously controllable inputs • Horizontal mounting position Up to 40 °C Up to 60 °C • Vertical mounting position Up to 40 °C	 32 16 32
Electrical isolation • Between channels and backplane bus • Between channels – in groups of	 Yes Yes 16
Isolation, designed for basic isolation • Between different circuits	 75 V DC / 60 V AC
Isolation tested with	500 V AC or 707 V DC, type test
Current consumption • From backplane bus	 Max. 50 mA
Power loss of the module	Typ. 6.5 W
Status, interrupts, diagnostics	
Status display	Green LED per channel
Group error display (SF LED)	Yes
Diagnostic interrupts	None
Diagnostic functions	None
Sensor selection data	
Input voltage • Rated value • For "1" signal • For "0" signal	 24 V DC 13 V to 30 V - 30 V to + 5 V
Input current • When signal "1" is present	 Typ. 7 mA
Input delay • At "0" to "1" transition • At "1" to "0" transition	 Typically 3 ms Typically 3 ms
Input characteristics	According to IEC 61131, Type 1
Connection of 2-wire BEROs • Permissible quiescent current	Supported Max. 1.5 mA
Connecting the signal transmitter	Using a 40-pin front connector

10.2.2 Digital input module DI 16 x DC24V

Article numbers

Standard module: 6ES7 650-8DK70-0AA0

Module with conformal coating: 6ES7 650-8DK70-1AA0

Properties

The DI 16 x DC 24 V is characterized by the following properties:

- 16 inputs, isolated in groups of 16
- Rated input voltage 24 V DC
- Input characteristics according to IEC 61131, Type 2
- Suitable for switches and 2-/3-/4-wire proximity switches (BEROs)
- 2 short-circuit-proof sensor supplies for each group of 8 channels
- "Sensor supply (Vs)" status displays
- External redundant sensor supply infeed is supported
- Group error display (SF)
- Configurable diagnostics
- Configurable diagnostic interrupt
- Configurable input delays
- Configuration in Run (CiR) supported

Wiring and block diagram of the DI 16 x DC 24 V

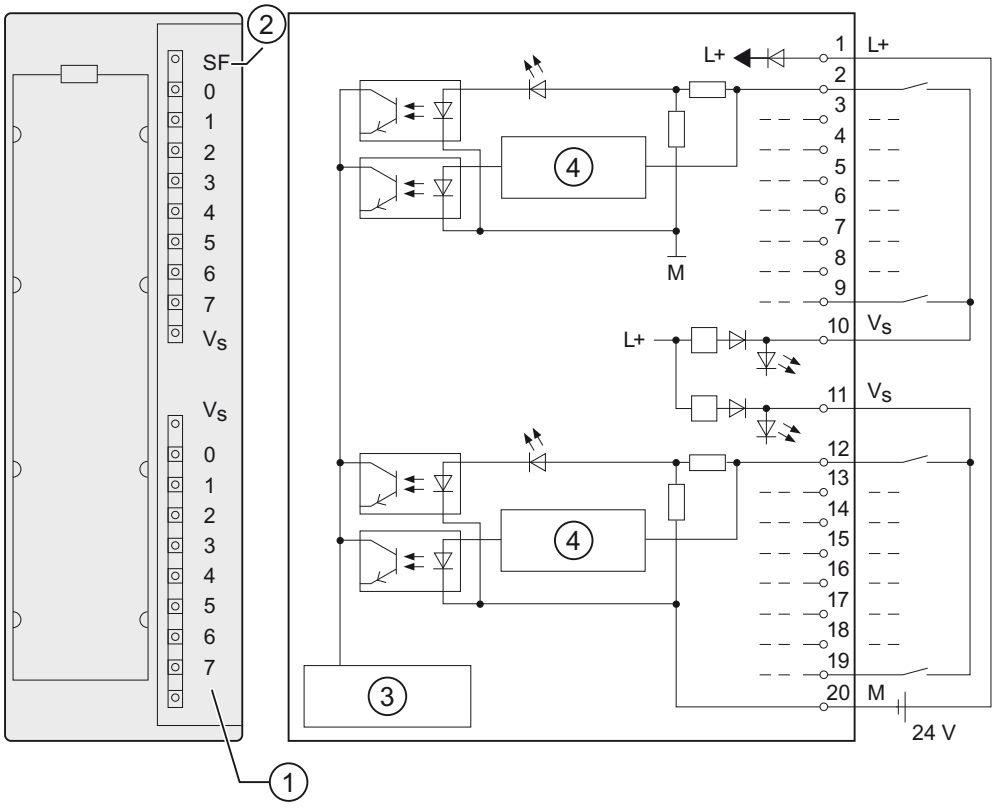

① Channel number
② Group error display red (F LED)
③ Backplane bus interface
④ Wire-break detection

Wiring diagram for redundant sensor supply

The figure below shows how sensors can be additionally supplied with a redundant voltage source using Vs.

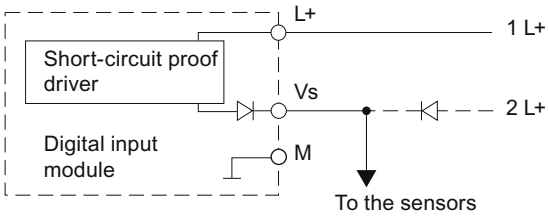

Figure 10-1 Wiring diagram for the redundant supply of sensors of the DI 16 x DC 24 V

Wiring diagram for resistance circuit of the sensors

For wire-break detection, it is necessary to connect sensor contacts with a resistor even in case of "0" signal.

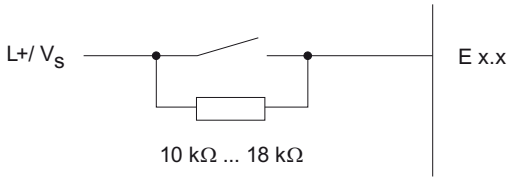

Figure 10-2 Wiring diagram for resistance circuit of the sensors of the DI 16 x DC 24 V

Redundant use

The inputs can be operated redundantly without external connection of diodes.

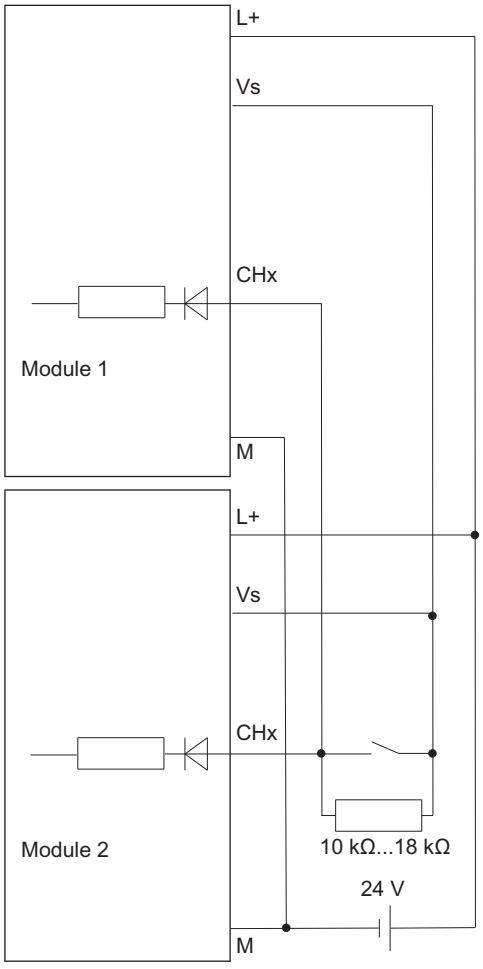

Technical specifications of the DI 16 x DC 24 V

Technical specifications	
Dimensions and weight	
Dimensions W x H x D (mm)	40 x 125 x 117
Weight	Approx. 200 g
Module-specific data	
Number of inputs	16
Cable length • Unshielded • Shielded	 Max. 600 m Max. 1000 m
Voltages, currents, potentials	
Rated supply voltage of electronics and sensors L+	24 V DC
• Reverse polarity protection	Yes
Number of simultaneously controllable inputs	
• Horizontal mounting position Up to 60 °C	 16
• Vertical mounting position Up to 40 °C	 16
Electrical isolation • Between channels plus sensor circuits (L+) and back-plane bus • Between channels – in groups of	 Yes 16
Isolation, designed for basic isolation	
• Between different circuits	75 V DC / 60 V AC
Isolation tested with	500 V AC or 707 V DC, type test
Current consumption	
• From backplane bus	Max. 130 mA
• From load voltage L+ (without sensor supply V_S)	Max. 90 mA
Power loss of the module	Typ. 4 W
Status, interrupts, diagnostics	
Status display	Green LED per channel
Sensor supply status	Green LED per sensor supply output
Group error display (SF LED)	Yes
Diagnostic interrupts	Configurable
Diagnostic functions	Configurable
Sensor supply outputs	
Number of outputs	2
Output voltage • On load	 Min. L+ (- 2.5 V)
Output current • Rated value • Permitted range	 120 mA 0 to 150 mA

Technical specifications	
Additional (redundant) supply	Permitted
Short-circuit protection	Yes, electronic
Sensor selection data	
Input voltage • Rated value • For "1" signal • For "0" signal	 24 V DC From 13 to 30 V From - 30 to + 5 V
Input current • When signal "1" is present	 Typ. 7 mA
Input characteristics	According to IEC 61131, Type 2
Connection of 2-wire BEROs • Permissible quiescent current	Supported Max. 2 mA
Connecting the signal transmitter	Using a 20-pin front connector
Resistance circuit of the sensor for wire-break detection	10 to 18 kilohm
Time/frequency	
Internal preparation time for diagnostics	Max. 40 ms
Input delay • Configurable • Rated value	 Yes Typ. 0.1/0.5/3/15/20 ms

10.2.2.1 Parameters of the DI 16 x DC 24 V

Parameter assignment

The parameters are assigned using the parameter assignment dialog of HW Config

Parameters of the DI 16 x DC 24 V

The table below provides an overview of the assignable parameters and their default settings for the DI 16 x DC 24 V.

The default settings apply when you have not assigned parameters in HW Config or you have not changed any parameters.

Table 10-2 Parameters of the DI 16 x DC 24 V

Parameter	Value range	Default setting	Scope
Diagnostic interrupt enable	Yes / No	Yes	Module
Input delay	0.1 ms 0.5 ms 3 ms 15 ms 20 ms	3 ms	Module
Diagnostics • No sensor supply • Wire break	 Yes / No Yes / No	 Yes Yes	 Channel Channel

Assignment of the sensor supplies to channel groups

The 2 sensor supplies of the module are used to supply two channel groups: inputs 0 to 7 and inputs 8 to 15. You also assign the diagnostics for the sensor supply in these channel groups.

Group diagnostics

The diagnostics parameter "Group diagnostics" enables the signaling of channel-specific errors to be switched off, with the exception of parameter assignment errors.

Tolerances of the assignable input delays

Table 10-3 Tolerances of the input delays of the DI 16 x DC 24 V

Assigned input delay	Tolerance
0.1 ms	60 µs to 140 µs
0.5 ms	400 µs to 900 µs
3 ms (default)	2.6 ms to 3.3 ms
15 ms	12 ms to 15 ms
20 ms	17 ms to 23 ms

10.2.2.2 Diagnostics of the DI 16 x DC 24 V

Introduction

Module faults and channel faults are displayed via the group error display (SF LED) and signaled via the diagnostic data records 0/1.

Diagnostic messages and possible corrective measures

The table below provides an overview of the diagnostic messages of the DI 16 x DC 24 V.

Table 10-4 Diagnostic messages of the DI 16 x DC 24 V and possible corrective measures

Diagnostic message	Configurable	Possible cause of error	Corrective measure
No sensor or load voltage	Yes	Overload of sensor supply	Eliminate the overload
		Short-circuit of sensor supply to M	Eliminate the short-circuit
Wire break	Yes	Interruption of the actuator connection	Check the wiring
No external auxiliary voltage	No	Supply voltage L+ of module missing	Feed supply L+
Module-internal supply voltage failed	No	Supply voltage L+ of module missing	Feed supply L+
		Module-internal fuse defective	Replace the module
Module parameters not assigned	No	Startup error	Reassign the module parameters
Incorrect parameters	No	One parameter, or the combination of parameters, is not plausible	Reassign the module parameters
Time monitoring tripped	No	Intermittently high electromagnetic interference	Eliminate the interference and switch the ET 200PA SMART station off and on.
EPROM error	No	Module defective	Replace the module
RAM error	No	Module defective	Replace the module

No sensor or load voltage

When “No sensor supply" diagnostics is activated, failure of the sensor supply is always signaled for all affected channels.

Reaction to failure of the supply voltage

The input value is initially held for the duration of 20 ms to 40 ms before the "0" signal is transferred to the CPU. Supply voltage dips < 20 ms do not change the process value.

Failure of the supply voltage with redundant sensor supply infeed

Note

When an external redundant supply is applied to the sensor supply (Vs) and the L+ supply voltage fails, failure of the sensor supply is not signaled. Instead, a failure of the internal and/or external auxiliary voltage and/or a blown fuse is signaled.

Short-circuit of the sensor supply Vs

The status LED of the sensor supply goes out in the event of a short-circuit of the sensor supply Vs, irrespective of the parameter assignment.

Wire break

In order for a wire break to be detected even in case of "0" signal, a resistance of 10 to 18 kilohms must be wired parallel to the sensor contacts.

10.3 Digital output modules

Overview of properties

The table below presents the ET 200PA SMART digital output modules based on their most important properties.

Table 10-5 Digital output modules

Properties	Module	
	DO16 x 24V/0.5A	DO32 x 24V/0.5A
	6ES7650-8EK70-xAA0	6ES7650-8EK80-xAA0
Number of outputs	16 Isolated in groups of 16	32 Isolated in groups of 8
Output current	0.5 A	0.5 A
Rated load voltage	24 V DC	24 V DC
Suitable for	Solenoid valves, DC contactors and signal lamps	
Configurable diagnostics	Yes	No
Diagnostic interrupt	Yes	No
Substitute value output	Yes (channel-specific)	No

10.3.1 Digital output module DO 32 x DC 24 V/ 0.5 A

Article numbers

Standard module: 6ES7 650-8EK80-0AA0

Module with conformal coating: 6ES7 650-8EK80-1AA0

Properties

The DO 32 x DC 24 V/0.5 A is characterized by the following properties:

- 32 outputs, isolated in groups of 8
- Output current 0.5 A
- Rated load voltage 24 V DC
- Suitable for solenoid valves, DC contactors and signal lamps
- Group error display (SF LED)

Use of the module with high-speed counters

Note the following when using the module in combination with high-speed counters:

Note

When the 24 V supply voltage is connected via a mechanical contact, the outputs of the DO 32 x DC 24 V/0.5 A have the "1" signal for approximately 50 µs due to the circuit.

Wiring and block diagram of the DO 32 x DC 24 V/ 0.5 A

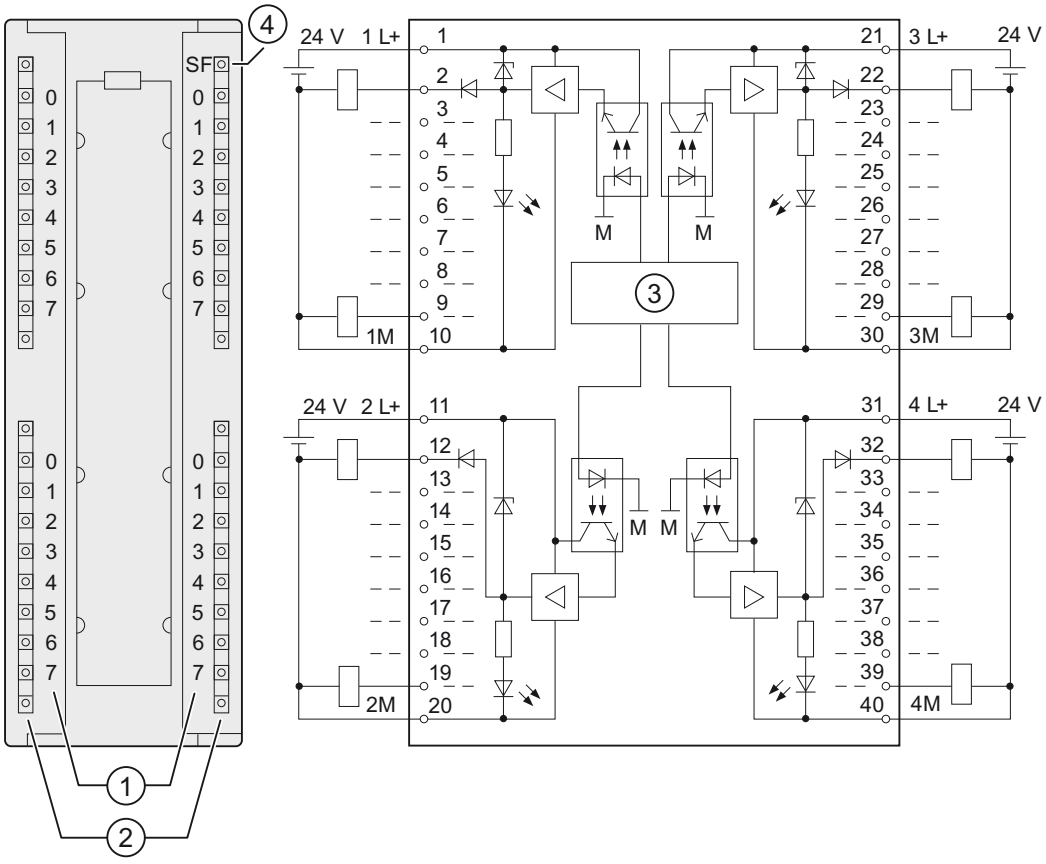

① Channel number
② Status display - green
③ Backplane bus interface
④ Group error display - red (SF LED)

Terminal assignment

The figure below shows the assignment of the channels to the addresses (output byte x to output byte x+3).

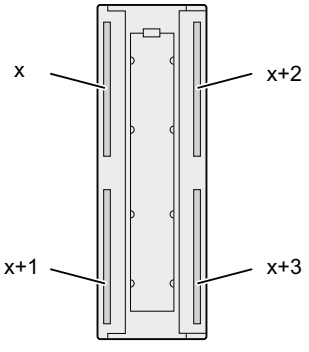

Redundant use

The redundant control is possible without external protection circuit. Both signal modules must have the same reference potential M.

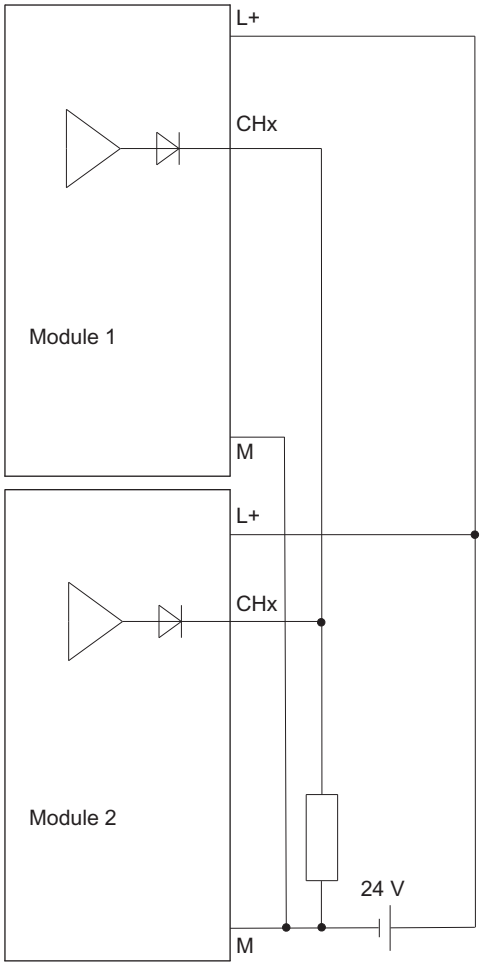

Technical specifications of the DO 32 x DC 24 V/ 0.5 A

Technical specifications	
Dimensions and weight	
Dimensions W x H x D (mm)	40 x 125 x 120
Weight	Approx. 300 g
Module-specific data	
Number of outputs	32
Cable length • Unshielded • Shielded	 Max. 600 m Max. 1000 m
Voltages, currents, potentials	
Rated load voltage L+	24 V DC

Technical specifications	
Reverse polarity protection	No
Total current of outputs (per group)	
• Horizontal mounting position Up to 40 °C Up to 60 °C	 Max. 4 A Max. 3 A
• Vertical mounting position Up to 40 °C	 Max. 2 A
Electrical isolation • Between channels and backplane bus	 Yes
• Between channels in groups of	Yes 8
Isolation, designed for basic isolation • Between different circuits	 75 V DC / 60 V AC
Isolation tested with	500 V AC or 707 V DC, type test
Current consumption • From backplane bus • From load voltage L+ (no load)	 Max. 60 mA Max. 100 mA
Power loss of the module	Typ. 9.3 W
Status, interrupts, diagnostics	
Status display	Green LED per channel
Group error display (SF LED)	Yes
Diagnostic interrupts	None
Diagnostic functions	None
Actuator selection data	
Output voltage • When signal "1" is present	 Min. L+ (-1.3 V)
Output current	
• When signal "1" is present Rated value Permitted range	 0.5 A 5 mA to 0.6 A
• When signal "0" is present (residual current)	Max. 0.5 mA
Output delay (with resistive load)	
• At "0" to "1" transition	Max. 200 µs
• At "1" to "0" transition	Max. 300 µs
Load resistance range	48 Ω to 4 kΩ
Lamp load	Max. 5 W
Connection of 2 outputs in parallel	
• For redundant control of a load	Supported
• For performance increase	Not supported
Control of a digital input	Supported
Switching frequency	
• With resistive load	Max. 100 Hz

Technical specifications	
• With inductive load according to IEC 947-5-1, DC 13	Max. 0.5 Hz
• With lamp load	Max. 10 Hz
Internal limiting of the inductive trip voltage to	Typ. L+ (-53 V)
Short-circuit protection of the output	Yes, electronic
• Response threshold	Typ. 1 A
Connection of the actuators	Using a 40-pin front connector

10.3.2 Digital output module DO 16 x DC 24 V/0.5 A

Article numbers

Standard module: 6ES7 650-8EK70-0AA0

Module with conformal coating: 6ES7 650-8EK70-1AA0

Properties

The DO 16 x DC 24 V/0.5 A is characterized by the following properties:

- 16 outputs, isolated in groups of 4 channels
- Output current 0.5 A
- Rated load voltage 24 V DC
- Suitable for solenoid valves, DC contactors and signal lamps
- Wire break detection at "0" and "1" signal
- Group error display (SF LED)
- Configurable diagnostics
- Configurable diagnostic interrupt
- Configuration in Run (CiR) supported

Wiring and block diagram

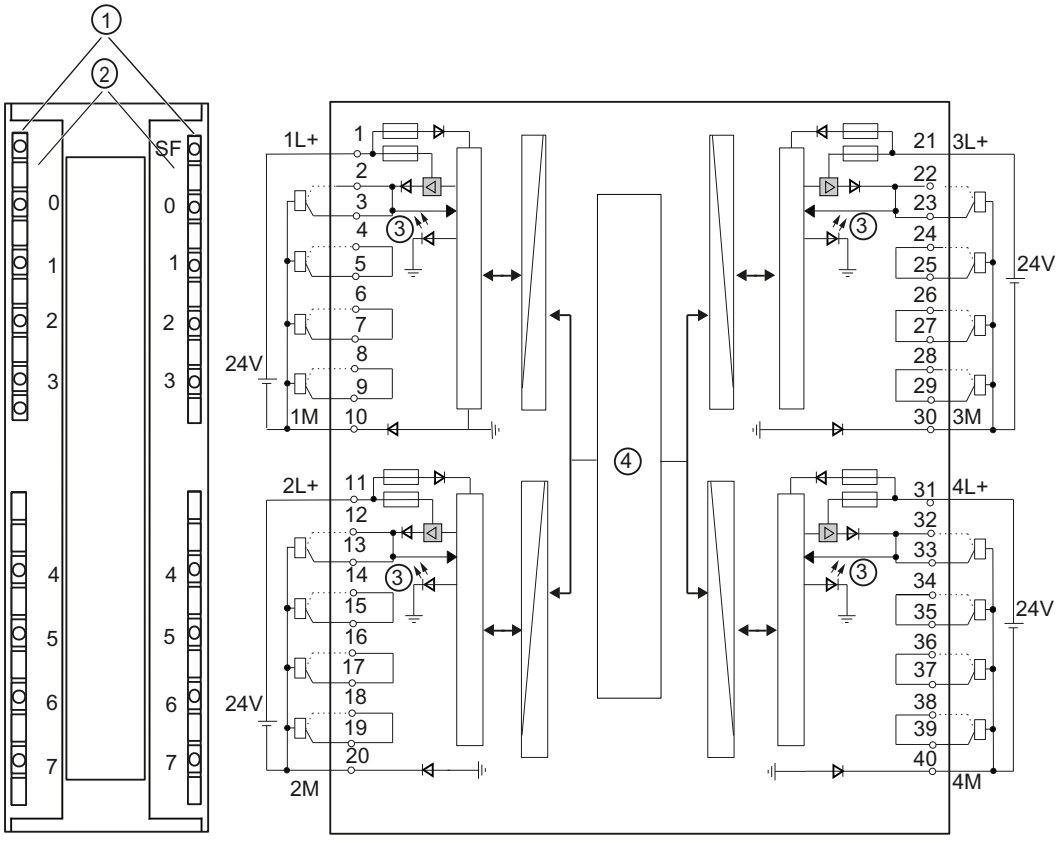

① Status displays - green
Group error display - red (SF_LED)

② Channel numbers
Numbers 0 to 7 on the right side correspond to channel numbers 8 to 15

③ Channel status

④ Backplane bus interface

Load resistances and actuators

The load resistances of the actuators must be in the range from 48 Ω to 4 kΩ. For larger values, a suitable resistor must be connected in parallel directly to the connecting terminals of the actuator (in so doing, observe the maximum power loss when signal "1" is present).

The lower response threshold of the actuator must be known in the operating temperature range or be determined experimentally. The output voltage of the module when signal "0" is present can be influenced through parallel connection of a resistor directly to the actuator connecting terminals. The maximum power loss when signal "1" is present must be observed when selecting the resistor.

- Load resistances between 10 kΩ and 1 MΩ can be signaled as a short-circuit to L+.
- Outputs or loads without protection circuit greater than 1 MΩ are signaled as a "wire break".

Redundant use

No monitoring for short-circuit to L+ occurs in redundant use.

Two terminals are present per channel. Both connections are equivalent and can be used for a redundant control of an actuator. The redundant control is possible without external protection circuit. In redundant operation with two modules, both modules must have the same reference potential M.

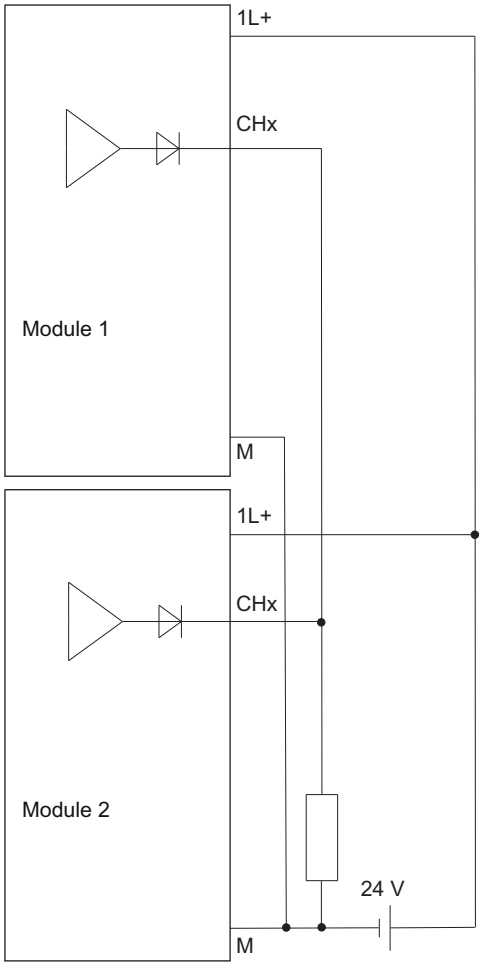

Technical specifications of the DO 16 x DC 24 V/0.5 A

Technical specifications	
Dimensions and weight	
Dimensions W x H x D (mm)	40 x 125 x 117
Weight	Approx. 300 g
Module-specific data	
Number of outputs	16

Technical specifications	
Cable length • Unshielded • Shielded	 Max. 600 m Max. 1000 m
Voltages, currents, potentials	
Rated load voltage L+	24 V DC
Reverse polarity protection	No
Total current of outputs (per group)	
• Horizontal mounting position up to 60 °C	Max. 2 A
• Vertical mounting position up to 40 °C	Max. 2 A
Electrical isolation • Between channels and backplane bus	 Yes
• Between channels in groups of	Yes 4
Isolation, designed for basic isolation • Between different circuits	 75 V DC / 60 V AC
Isolation tested with	500 V AC or 707 V DC, type test
Current consumption • From backplane bus • From load voltage L+ (no load)	 Max. 100 mA Max. 100 mA
Power loss of the module	Typ. 6 W
Status, interrupts, diagnostics	
Status display	Green LED per channel
Group error display (SF LED)	Yes
Diagnostic interrupt	Configurable
Diagnostic functions	Configurable
Actuator selection data	
Output voltage	
• When signal "1" is present	Min. L+ (-1.3 V)
• When signal "0" is present	0.7 mA * RL (RL = load resistance value) Max. 31 V when RL = infinite
Output current	
• When signal "1" is present Rated value Permitted range	 0.5 A 5 mA to 0.6 A
• When signal "0" is present (residual current)	Max. 0.7 mA
Output delay (with resistive load)	
• At "0" to "1" transition	Max. 2.7 ms (including module cycle time)
• At "1" to "0" transition	Max. 2.7 ms (including module cycle time)
Load resistance range	48 Ω to 4 kΩ
Lamp load	Max. 5 W
Connection of 2 outputs in parallel	
• For redundant control of a load	Supported

Technical specifications	
• For performance increase	Not supported
Control of a digital input	Supported
Switching frequency	
• With resistive load	Max. 100 Hz
• With inductive load according to IEC 947-5-1, DC 13	Max. 2 Hz
• With lamp load	Max. 10 Hz
Internal limiting of the inductive trip voltage to	Typ. L+ (-68 V)
Short-circuit protection of the output	Yes, electronic
• Response threshold	Typ. 1.4 A
Connection of the actuators	Using a 40-pin front connector

10.3.2.1 Parameters of the DO 16 x DC 24 V/0.5 A

Parameter assignment

The parameters are assigned using the parameter assignment dialog of HW Config

Parameters of the DO 16 x DC 24 V/0.5 A

The table below provides an overview of the assignable parameters and their default settings for the DO 16 x DC 24 V/0.5 A.

The default settings apply when you have not assigned parameters in HW Config or you have not changed any parameters.

Table 10-6 Parameters of the DO 16 x DC 24 V/0.5 A

Parameter	Value range	Default setting	Scope
Diagnostic interrupt enable	Yes / No	Yes	Module
Diagnostics			
• Group diagnostics	Yes / No	Yes	Channel
• No load voltage L+	Yes / No	Yes	Channel group
Reaction to CPU/master STOP	Substitute a value/ Keep last value	Substitute a value	Module
Substitute value	0/1	0	Channel

Group diagnostics

The diagnostics parameter "Group diagnostics" enables the signaling of channel-specific errors to be switched off, with the exception of parameter assignment errors.

10.3.2.2 Diagnostics of the DO 16 x DC 24 V/0.5 A

Introduction

Module faults and channel faults are displayed via the group error display (SF LED) and signaled via the diagnostic data records 0/1.

Diagnostic messages and possible corrective measures

Table 10-7 Diagnostic messages of the DO 16 x DC 4 V/0.5 A and possible corrective measures

Diagnostic message	Configurable	Possible cause of error	Corrective measure
Encoder or load voltage missing	Yes (per channel group)	Corresponding supply voltage L+ missing	Feed supply L+
Wire break	Yes (group diagnostics)	Interruption of the actuator connection	Check wiring/actuator
Short-circuit to M	Yes (group diagnostics)	Output short-circuited to ground	Check the wiring
Short-circuit to L+	Yes (group diagnostics)	Output short-circuited to L+	Check wiring/actuator
		Load resistance between 10 kΩ and 1 MΩ	
No external auxiliary voltage	Yes	At least one supply voltage L+ of the module is missing	Feed supply L+
Fuse blown	No	At least one module-internal fuse is defective	Replace the module
Module parameters not assigned	No	Startup error	Reassign the module parameters
Incorrect parameters	No	One parameter, or the combination of parameters, is not plausible	Reassign the module parameters
Parameter assignment error	No	One parameter, or the combination of parameters, is not plausible	Reassign the module parameters
Time monitoring tripped	No	Intermittently high electromagnetic interference	Eliminate the interference and switch the ET 200PA SMART station off and on.
EPROM error	No	Module defective	Replace the module
RAM error	No	Module defective	Replace the module

Group diagnostics

The diagnostics parameter "Group diagnostics" enables the signaling of channel-specific errors to be switched off, with the exception of "External load voltage L+" and "Parameter assignment error".

No load voltage L+

The "External load voltage L+" channel diagnostics is enabled in channel groups via the "No load voltage L+" diagnostics parameter. This means that if a load voltage fails, the error is always signaled in the case of all four channels of a channel group. Additionally, the module-specific message occurs in byte 0 of the diagnostics data record 0 / 1, "No external auxiliary voltage".

The module message "No external auxiliary voltage" is only set if at least one channel group signals "No load voltage L+", i.e., the load voltage is missing and the diagnostics is enabled.

Fuse blown

A blown fuse is always signaled in the case of all four channels of a channel group. In addition to the channel-specific message, the module-specific message always occurs in byte 3 of the diagnostic data record 0 / 1, "Fuse defect". Even if the "Group diagnostics" diagnostics parameter is disabled for all channels, a defective fuse is always signaled as a module fault in byte 3 of the diagnostic data record 0 / 1 "Fuse defect".

10.3.3 How to protect digital modules from inductive overvoltage

Inductive overvoltages

Overvoltages occur when inductors are de-energized. Examples of inductors are relay coils and contactors.

Integrated overvoltage protection

The digital output modules of the ET 200PA SMART have an integrated overvoltage protection device.

Additional overvoltage protection

Inductors should only be connected to additional overvoltage protection devices in the following cases:

- If SIMATIC output circuits can be de-energized by additionally installed contacts (e.g. relay contacts).
- If the inductors are not controlled by SIMATIC modules.

Note: Ask the supplier of the inductor about how to dimension the respective overvoltage protection device.

Example

The following diagram shows an output circuit that requires additional overvoltage protection devices.

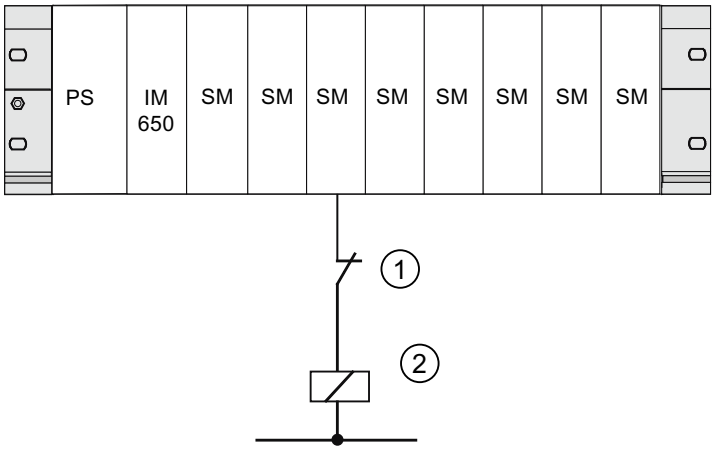

① Contact in output circuit

② Inductor requires a protection circuit

Figure 10-3 Relay contact for EMERGENCY STOP in output circuit

Protection circuit of DC-actuated coils

DC-actuated coils are connected to diodes or Zener diodes as shown in the following figure.

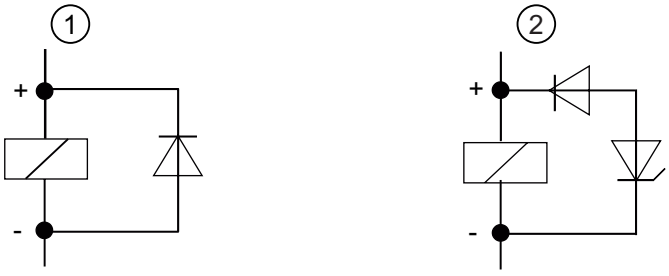

① With diode

② With Zener diode

Figure 10-4 Protection circuit of DC-actuated coils

The protection circuit with diodes/Zener diodes has the following properties:

- Trip overvoltages can be completely prevented. Zener diode has a higher trip voltage.
- High trip delay (6 to 9 times higher compared to case without protection circuit).

Zener diode trips faster than diode protection circuit.

Protection circuit of AC-actuated coils

AC-actuated coils are connected to varistors or RC elements as shown in the figure.

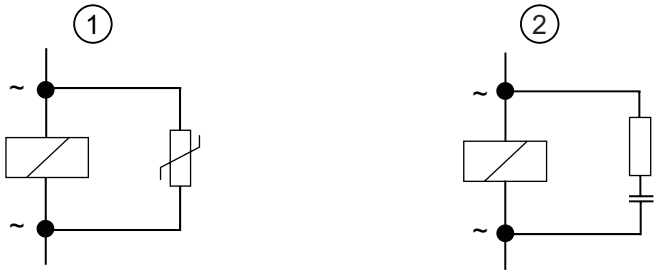

① With varistor

② With RC element

Figure 10-5 Protection circuit of AC-actuated coils

The protective circuit with varistor has the following properties:

- The amplitude of the trip overvoltage is limited but not attenuated.
- The steepness of the overvoltage remains the same.
- The trip delay is low.

The protection circuit with RC elements has the following properties:

- The amplitude and steepness of the trip overvoltage are reduced.
- The trip delay is low.

10.4 Analog input modules

Overview of properties

The table below presents the ET 200PA SMART analog input modules based on their most important properties.

Table 10-8 ET 200PA SMART analog input modules

Properties	Module				
	AI8x13-bit	AI8x16Bit	AI 8 x 16-bit HART	AI16x16Bit	AI8xTC/4xRTD
	6ES7650-8AE60-xAA0	6ES7 650-8AK60-xAA0	6ES7 650-8AT60-xAA0	6ES7 650-8AK70-xAA0	6ES7 650-8AR60-xAA0
Number of inputs	8 inputs in 8 channel groups	8 inputs in 1 channel group	8 inputs in 1 channel group	16 inputs in 1 channel group	8 inputs in 4 channel groups
Resolution	Can be set for each channel: • 12 bits + sign	Can be set for each channel: • 15 bits + sign	Can be set for each channel: • 15 bits + sign	Can be set for each channel: • 15 bits + sign	Can be set for each channel group: • 9 bits + sign • 12 bits + sign • 15 bits + sign

Properties	Module				
	AI8x13-bit	AI8x16Bit	AI 8 x 16-bit HART	AI16x16Bit	AI8xTC/4xRTD
	6ES7650-8AE60-xAA0	6ES7 650-8AK60-xAA0	6ES7 650-8AT60-xAA0	6ES7 650-8AK70-xAA0	6ES7 650-8AR60-xAA0
Measurement type	Can be set for each channel group: • Voltage • Current • Resistance • Thermal resistance	Global changeover possible with a jumper between pins 10 & 11: • 2-wire transducer current • 4-wire transducer current	Global changeover possible with a jumper between pins 10 & 11: • 2-wire transducer current • 4-wire transducer current	Global changeover possible with a jumper between pins 10 & 11: • 2-wire transducer current • 4-wire transducer current	Can be set for each channel group: • Voltage • Resistance • Thermal resistance • Thermocouple
Measuring range selection	Any, per channel	Any, per channel	Any, per channel	Any, per channel	Any, per channel
Configurable diagnostics	No	Yes	Yes	Yes	Yes
Diagnostic interrupt	No	Can be set	Can be set	Can be set	Can be set
Electrical isolation	From: • Backplane bus interface	In relation to: • Backplane bus interface • Load voltage (not for 2-wire transducer)	From: • Backplane bus interface • Load voltage (not for 2-wire transducer)	From: • Backplane bus interface • Load voltage (not for 2-wire transducer)	In relation to: • Backplane bus interface
Isolation, designed for basic isolation	75 V DC 60 V AC	75 V DC 60 V AC	75 V DC 60 V AC	75 V DC 60 V AC	75 V DC 60 V AC

Basics

A variety of transducers can be connected to the analog input modules. These measuring transducers are, for example:

- Voltage sensors
- Current sensors
- Resistors / thermistors
- Thermocouples

You can find the following information in the manual SIMATIC S7-300 Automation System, Module Data (http://support.automation.siemens.com/WW/view/en/8859629/) :

- Basics regarding the basic procedure for connecting the various transducers to the analog inputs
- Basics of analog value processing
- Information on the analog value formats used in each case

Cables for analog signals

Always use shielded twisted-pair cables for the analog signals. This reduces the noise interference. You should ground the shield of the analog cables at both ends.

If potential differences exist between the cable ends, an equipotential bonding current may flow via the shield and disturb the analog signals. In this case, you must provide for a low-resistance equipotential bonding, and, if necessary, ground the shield only at one end of the cable.

Observe the generally-applicable information regarding connection of loads/actuators in the SIMATIC S7-300 Automation System, Module Data (http://support.automation.siemens.com/WW/view/en/8859629/) manual.

Value ranges of the analog values

The behavior of the analog modules is dependent on the area of the value range in which analog input values fall.

Table 10-9 Behavior of the analog modules as a function of the acquired measured value

Measured value within	Input value	SF LED	Diagnostic data record 0/1	Diagnostic interrupt
Nominal range	Measured value	-	-	-
Overrange/ underrange	Measured value	-	-	-
Overflow	7FFFH	Lit[1)]	Entry made[1)]	Diagnostic interrupt[1)]
Underflow	8000H	Lit[1)]	Entry made[1)]	Diagnostic interrupt[1)]

[1)] Only in the case of modules with diagnostic capability and depending on parameter assignment

10.4.1 Analog input module AI 8 x 13-bit

Article no.

Standard module: 6ES7650-8AE60-0AA0

Module with conformal coating: 6ES7 650-8AE60-1AA0

Properties

The analog input module is characterized by the following features:

- 8 inputs in 8 channel groups
- Programmable resolution at each channel group (12 bits + sign)

- Programmable measurement type per channel group:
  - Voltage
  - Current
  - Resistance
  - Temperature
- Any measuring range per channel
- Motor protection / temperature monitoring with PTC in accordance with IEC 60034-11-2 type A
- Temperatures recorded via KTY83/110, KTY84/130 silicon temperature sensors

Terminal assignment

The diagrams below show various wiring options. These examples apply to all channels (channel 0 to 7).

Note

When connecting voltage and current transducers, make sure that the maximum permitted common-mode voltage C_{MV} of 2 V is not exceeded between the inputs. Prevent measuring errors by interconnecting the corresponding M- terminals.

Wiring: Voltage measurement

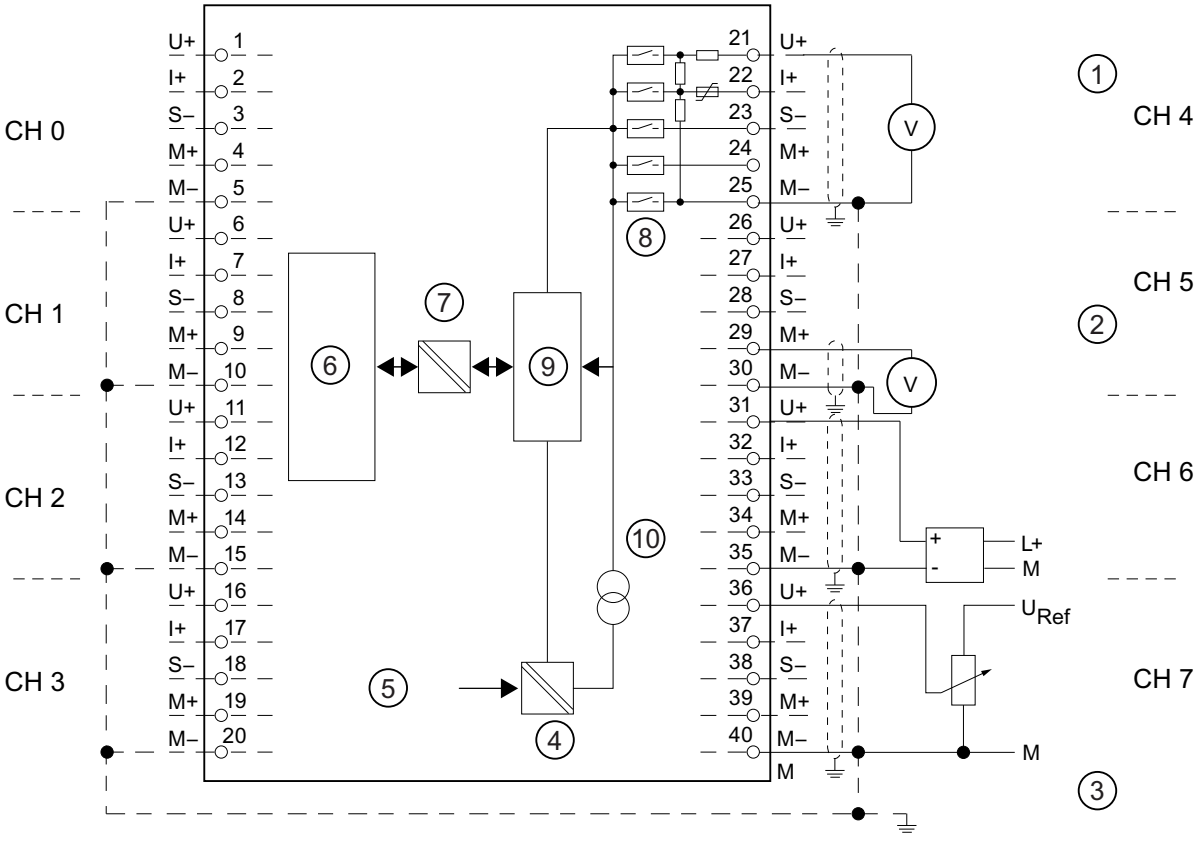

① Voltage measurement: (±5 V, ±10 V, 1 V to 5 V, 0 V to 10 V)
② Voltage measurement (± 50 mV, ± 500 mV, ± 1 V) (note the input resistance defined in the technical data)
③ Equipotential bonding
④ Internal supply
⑤ + 5 V from backplane bus
⑥ Logic and backplane bus interface
⑦ Electrical isolation
⑧ Multiplexer
⑨ Analog to Digital Converter (ADC)
⑩ Current source

Figure 10-6 Block diagram and wiring diagram

Wiring: 2-wire and 4-wire transducers for current measurement

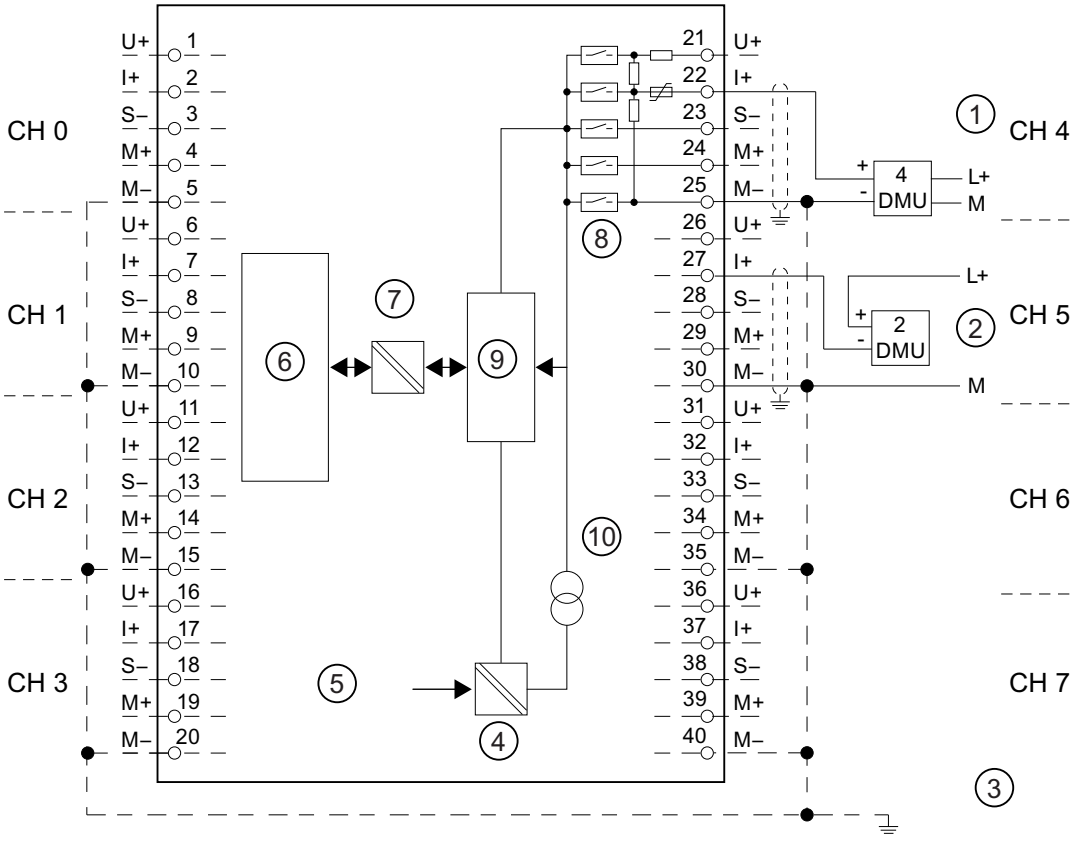

① 4-wire transducer (0/4 mA to 20 mA or ± 20 mA)
② 2-wire transducer (4 mA to 20 mA)
③ Equipotential bonding
④ Internal supply
⑤ + 5 V from backplane bus
⑥ Logic and backplane bus interface
⑦ Electrical isolation
⑧ Multiplexer
⑨ Analog to Digital Converter (ADC)
⑩ Current source

Figure 10-7 Block diagram and wiring diagram

Wiring: Resistance measurement with 2-, 3- and 4-wire connection

The following connection possibilities also apply to silicon temperature sensors and PTCs.

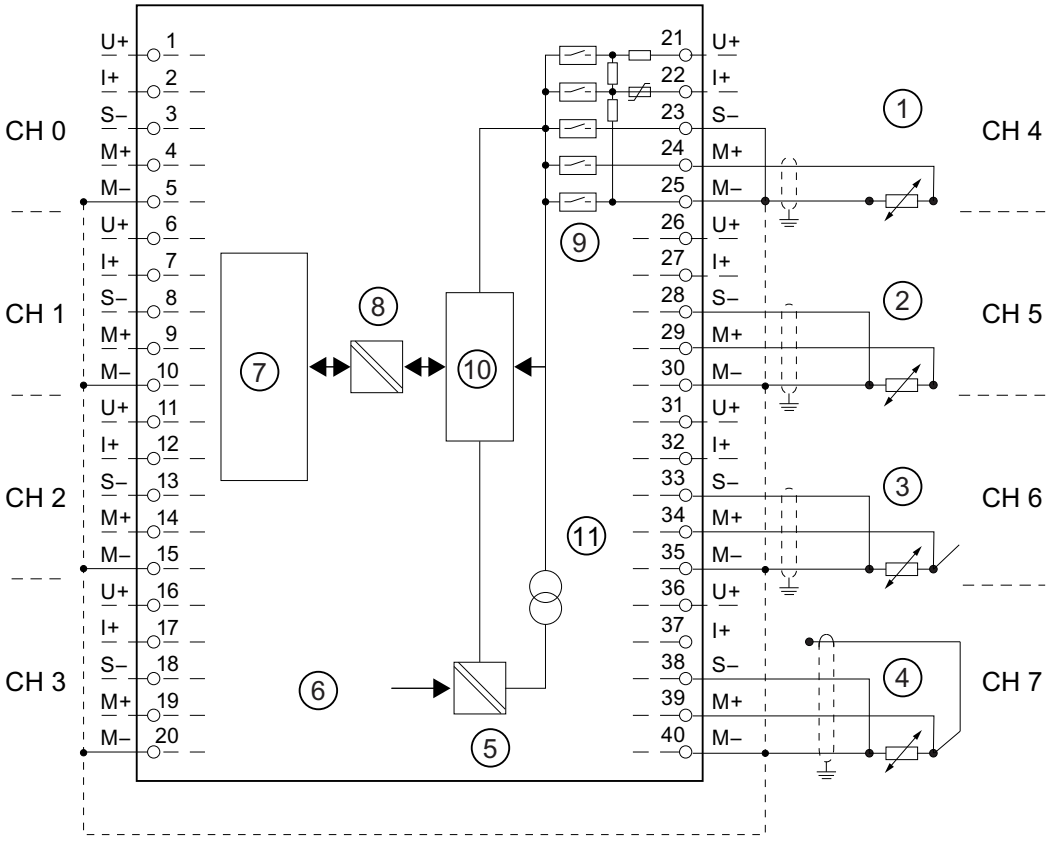

① 2-wire connection. Insert a bridge between M and S (no line resistance compensation).
② 3-wire connection
③ 4-wire connection. The fourth line may not be wired (remains unused)
④ 4-wire connection. The fourth line is routed to the terminal strip in the cabinet but is not wired.
⑤ Internal supply
⑥ + 5 V from backplane bus
⑦ Logic and backplane bus interface
⑧ Electrical isolation
⑨ Multiplexer
⑩ Analog to Digital Converter (ADC)
⑪ Current source

Figure 10-8 Block diagram and wiring diagram

Note

It is not necessary to interconnect the M- terminals when measuring using resistors, resistance thermometers, PTCs, or silicon temperature sensors. However, interconnection of the M-terminals may enhance interference immunity.

Technical specifications

Technical specifications		
Dimensions and weight		
Dimensions W x H x D (mm)	40 x 125 x 117	
Weight	ca. 250 g	
Module-specific data		
Supports isochronous mode	no	
Number of inputs • With resistance transducers	8 8	
Cable length • shielded	 max. 200 m max. 50 m at 50 mV	
Voltages, currents, potentials		
Constant current for resistive transducers • Resistance thermometer and resistance measurements 0 Ω to 600 Ω • Resistance measurement 0 kΩ to 6 kΩ, PTC, silicon temperature sensors	 0.83 mA (pulsed) 0.25 mA (pulsed)	
Electrical isolation • Between channels and backplane bus • between channels	 yes no	
Permissible potential difference • between inputs (CMV) • Between the inputs and $M_{internal}$ (V_{iso})	 2.0 V DC 75 V DC / 60 V AC	
Isolation tested with	500 V DC	
Current consumption • From backplane bus	 max. 90 mA	
Power loss of the module	typ. 0.4 W	
Analog value formation		
Measuring principle	Integrating	
Integration/conversion time/resolution (per channel)		
• programmable	yes	
• Noise suppression at interference frequency f1 in Hz	50	60
• Integration time in ms	60	50
• Basic conversion time, including the integration time in ms	66	55
Additional conversion time for resistance measurements in ms	66	55
• Resolution in bits (including overrange)	13 bits	13 bits
Noise suppression, error limits		
Interference frequency suppression at f = n (f1 ± 1 %), (f1 = interference frequency) n=1.2		

Technical specifications		
• Common mode interference (V_{CM} < 2 V) • Seriesmode interference (peak value < rated input range)	> 86 dB > 40 dB	
Crosstalk between inputs	> 50 dB	
Operational limit (across entire temperature range, relative to the measurement range end value in the selected input range)		
• Voltage input	± 5 V	± 0.6%
	± 10 V 1 V to 5 V 0 V to 10 V ± 50 mV ± 500 mV ± 1 V	± 0.5%
• Current input	± 20 mA 0 mA to 20 mA 4 mA to 20 mA	± 0.5%
• Resistor/PTC	0 kΩ to 6 kΩ 0 Ω to 600 Ω PTC	± 0.5% ± 0.5% ± 0.5%
• Resistance thermometer/silicon temperature sensors	Pt 100 Ni 100 Standard	± 1.2 K
	Pt 100 Ni 100 Klima	± 1 K
	Ni 1000, LG-Ni 1000 Standard	± 1 K
	Ni 1000 LG-Ni 1000 Klima	± 1 K
	KTY83/110 KTY84/130	± 3.5 K ± 4.5 K
Basic error limit (operational limit at 25 °C, relative to the measurement range end value in the selected input range)		
• Voltage input	± 5 V	± 0.4%
	± 10 V 1 V to 5 V 0 V to 10 V ± 50 mV ± 500 mV ± 1 V	± 0.3%

Technical specifications		
• Current input	± 20 mA 0 mA to 20 mA 4 mA to 20 mA	± 0.3%
• Resistor/PTC	0 kΩ to 6 kΩ 0 Ω to 600 Ω PTC	± 0.3% ± 0.3% ± 0.3%
• Resistance thermometer/silicon temperature sensors	Pt 100 Ni 100 Standard	± 1 K
	Pt 100 Ni 100 Klima	± 0.8 K
	Ni 1000 LG-Ni 1000 Standard	± 0.8 K
	Ni 1000 LG-Ni 1000 Klima	± 0.8 K
	KTY83/110 KTY84/130	± 2 K ± 2.7 K
Temperature error (relative to input range)	± 0.006 %/K / 0.006 K/K	
Linearity error (relative to input range)	± 0.1 % / 0.1 K	
Repeat accuracy (in transient state at 25 °C, relative to input range)	± 0.1 % / ± 0.1 K	
Status, interrupts, diagnostics		
Interrupts	none	
Diagnostic functions	none	
Sensor selection data		
Input ranges (rated values) / input impedance		
• Voltage	± 50 mV ± 500 mV ± 1 V ± 5 V ± 10 V 1 V to 5 V 0 V to 10 V	100 kΩ
• Current	± 20 mA 0 mA to 20 mA 4 mA to 20 mA	100 Ω
• Resistor/PTC	0 kΩ to 6 kΩ 0 Ω to 600 Ω PTC	100 MΩ

Technical specifications		
• Resistance thermometer/silicon temperature sensors	Pt 100 Ni 100 Ni 1000 LG-Ni 1000 Standard / Klima KTY83/110 KTY84/130	100 MΩ
Maximum voltage at voltage input U+ (destruction limit)	max. 30 V, continuous	
Maximum voltage at voltage inputs M+, M-, S- (destruction limit)	max. 12 V continuous; 30 V for a duration of max. 1 s	
Maximum current at current input I+ (destruction limit)	40 mA	
Connecting the signal transmitter	Using a 40-pin front connector	
• for voltage measurement • for current measurement – as 2-wire transducer – as 4-wire transducer	Supported supported, with external supply Supported	
• for resistance measurement with 2-wire connection with 3-wire connection with 4-wire connection	 Supported Supported Supported	
Characteristics linearization	programmable	
• for resistance thermometers	Pt 100 Standard / Klima Ni 100 Standard / Klima Ni 1000 Standard / Klima LG-Ni 1000 Standard / Klima	
• Technical unit of temperature measurement	Degrees Centigrade, degrees Fahrenheit, Kelvin	

10.4.1.1 Measurement types and measuring ranges

Introduction

The measurement type and range is configured at the "measuring type" parameter in *STEP 7*.

Selected type of measurement	Measuring range
Voltage V:	± 50 mV ± 500 mV ± 1 V ± 5 V 1 V to 5 V 0 V to 10 V ± 10 V
Current I	0 mA to 20 mA 4 mA to 20 mA ± 20 mA
resistance (4-wire connection) R-4L	6 kΩ 600 Ω PTC
Thermal resistance RTD-4L (linear, 4-wire connection) (temperature measurement) Silicon temperature sensors	Pt 100 Klima / Standard Ni 100 Klima / Standard Ni 1000 Klima / Standard LG-Ni 1000 Klima / Standard KTY83/110 KTY84/130

10.4.1.2 Parameters of the AI 8 x 13 bits

Parameter assignment

The parameters are assigned using the parameter assignment dialog of HW Config

Parameter

Table 10-10 Overview of parameters for SM 331; AI 8 x 13-bit

Parameters	Value range	Default	Parameter type	Scope
Measurement • Measurement type	disabled Voltage V Current I Resistance R, PTC Thermal resistance RTD, silicon temperature sensors	U	dynamic	Channel
• Measuring range	Voltage ± 50 mV; ± 500 mV; ±1 V; 1 V to 5 V ± 5 V; 0 V to 10 V; ± 10 V	± 10 V		
	Current 0 mA to 20 mA; 4 mA to 20 mA; ± 20 mA	± 20 mA		
	Resistance 0 Ω to 600 Ω; 0 kΩ to 6 kΩ; PTC	600 Ω		
	Thermoelectric resistance (linear) Pt 100 Klima / Standard Ni 100 Klima / Standard Ni 1000 Klima / Standard LG-Ni 1000 Klima / Standard KTY83/110 KTY84/130	Pt 100 standard		
• Temperature coefficient	Pt 100 0.003850 Ω/Ω/ °C (IST-90) Ni 100 / Ni 1000 0.006180 Ω/Ω/ °C LG-Ni 1000 0.005000 Ω/Ω/ °C	0.003850		
• Interference frequency suppression	50 Hz; 60 Hz	50 Hz		Module
• Temperature unit	Degrees Centigrade, degrees Fahrenheit, Kelvin*	degrees Centigrade		
* only Pt 100 Standard, Ni 100 Standard, Ni 1000 Standard, LG-Ni 1000 Standard				

10.4.1.3 Supplemental information on AI 8 x 13-bit

Unused channels

Set the "disabled" value at the "measurement type" parameter for unused channels. This setting reduces module cycle times.

Interconnect the M- terminals of unused channels.

Using PTC resistors

PTCs are suitable for monitoring the temperature of or providing thermal protection for complex drives and transformer windings. The module has no analog values when PTC resistances are used. Status information on fixed temperature ranges are displyed instead of analog values.

- When setting the parameters, select measurement type R "Resistance" and measuring range "PTC".
- Connect the PTC (see "Terminal diagram for resistance measurement").
- Use PTC resistors that comply with IEC 60034-11-2 (previously, PTC thermistors that complied with DIN/VDE 0660, Part 302).
- Sensor data for the PTC resistor:

Property	Technical specifications	Comment
Switching points	Response to rising temperature	
	< 550 Ω	Normal range: Bit 0 = "0", bit 2 = "0" (in the PII)
	550 Ω to 1650 Ω	Advance warning range: Bit 0 = "0", bit 2 = "1" (in the PII)
	> 1650 Ω	Actuating range: Bit 0 = "1", bit 2 = "0" (in the PII)
	Response to falling temperature	
	> 750 Ω	Actuating range: Bit 0 = "1", bit 2 = "0" (in the PII)
	750 Ω to 540 Ω	Advance warning range: Bit 0 = "0", bit 2 = "1" (in the PII)
	< 540 Ω	Normal range: Bit 0 = "0", bit 2 = "0" (in the PII)
(RRT-5) °C (RRT+5) °C (RRT+15) °C Measurement voltage Voltage at PTC	Max. 550 Ω Min. 1,330 Ω Min. 4,000 Ω Max. 7.5 V	RRT = Rated response temperature

- Assignment in the process image input (PII)

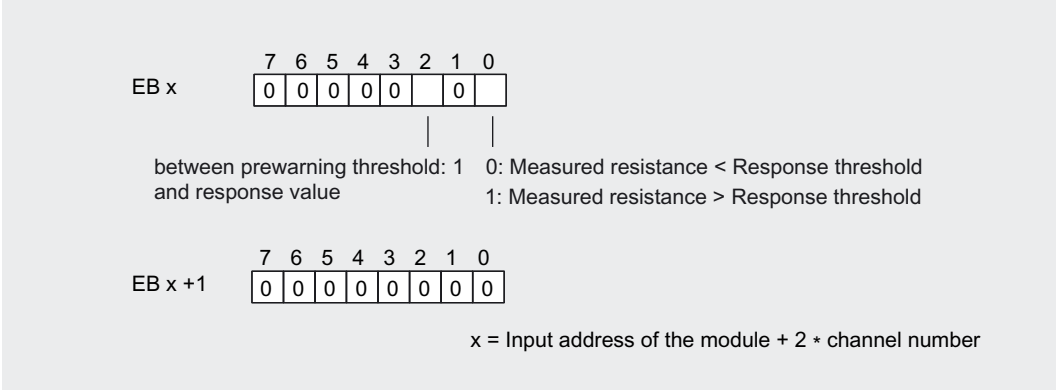

- Notes on programming

Note

Only bits 0 and 2 in the process image input are relevant for evaluation. You can use bits 0 and 2 to monitor the temperature of a motor, for example.

Bits 0 and 2 in the process image input cannot be saved. When assigning parameters, make sure that the motor, for example, starts up in a controlled manner (by means of an acknowledgment).

Bits 0 and 2 can never be set at the same time; they are set one after the other.

Using silicon temperature sensors

Silicon temperature sensors are commonly used to detect temperatures in motors.

- When assigning the parameters, select measurement type "thermoresistor" and measuring range "KTY83/110" or "KTY84/130".
- Connect the temperature sensor (see "Terminal diagram for resistance measurement").

Use temperature sensors which comply with the Product Specifications published by Philips Semiconductors.

- KTY83 series (KTY83/110)
- KTY84 series (KTY84/130)

Also take note of the accuracy of the temperature sensors.

The temperature is specified in 0.1 degrees C, 0.1 degrees K or 0.1 degrees F.

10.4.2 Analog input module AI 8 x 16 Bit

Article numbers

Standard module: 6ES7 650-8AK60-0AA0

Module with conformal coating: 6ES7 650-8AK60-1AA0

Properties

The analog input module AI 8 x 16 Bit is characterized by the following properties:

- 8 inputs and 8 outputs (for supplying of 2-wire transducers)
- HART conforming
  In non-redundant operation, connection of a resistance of approximately 100 in series with the transducer is recommended.
- Resolution of 15 bits + sign (regardless of integration time)
- Setting of the transducer for each module (via a jumper at terminals 10 and 11):
  – 2-wire transducer current, only in measuring range 4 ... 20 mA
  – 4-wire transducer current
- Configurable measuring range for each channel
  – 0 ... 20 mA
  – ± 20 mA
  – 4 ... 20 mA
- Configurable smoothing for each channel
- Configurable integration time/interference frequency suppression for each channel
- Configurable diagnostics
- Configurable diagnostic interrupt
- Electrical isolation
  – Channels electrically isolated for 4-wire transducer to load voltage L+
  – Channels electrically isolated from IM 650
- Group error display (SF LED)
- Configuration in Run (CiR) supported

Wiring and block diagrams of the AI 8 x 16 Bit with 2-wire transducer operation

If the module is used for 2-wire transducer operation, a jumper must be inserted between terminals 10 and 11. This activates the short-circuit-protected transducer supply of the module and implements the jumpering at the analog input.

All channels of the module operate in 2-wire transducer mode in this case. This is shown in the figure below using channel 0 as an example.

The parameter assignment is made via HW Config as "2WMT current"

The 2-wire transducer converts the measured variable to a current. The 2-wire transducers must be isolated measuring sensors.

Through the use of L+, M for common supply of the transducers, the permitted potential difference between the channels is revoked. UISO therefore does not apply in the case of 2-wire transducers.

You can also use a 4-wire transducer with separate supply. This is shown in the figure below using channel 5 as an example.

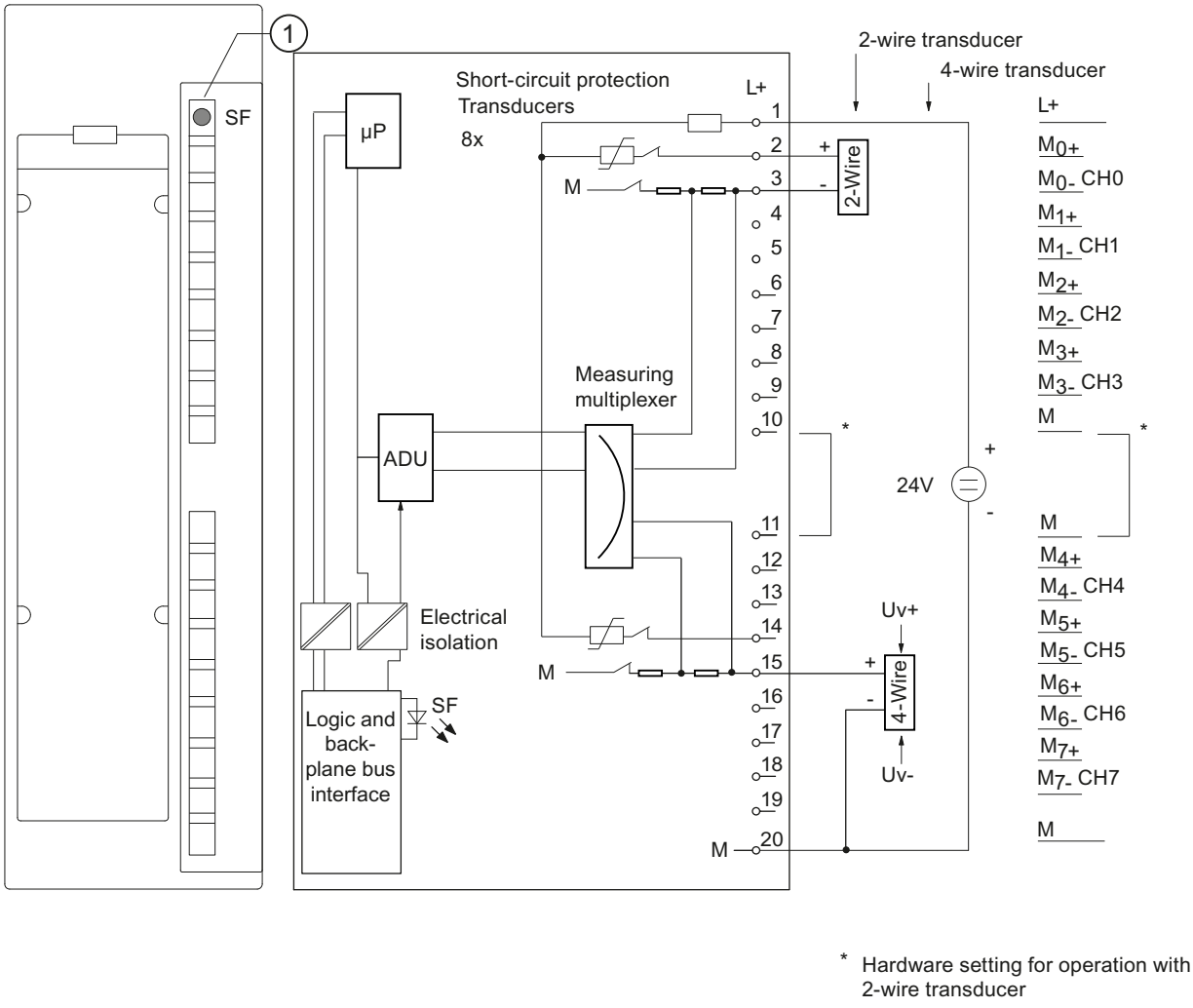

① Group error display - red (SF LED)

Figure 10-9 Module view and block diagram of the AI 8 x 16 Bit in 2-wire transducer mode

Wiring diagram

When the module is used for 4-wire transducer operation, terminals 10 and 11 must not be jumpered.

All channels of the module operate in 4-wire transducer mode in this case. Shown using channel 1 as an example.

The parameter assignment is made via HW Config as "4WMT current"

The 4-wire transducers have a separate supply voltage.

You can also use a 2-wire transducer with separate fused supply. This is shown in the figure below using channel 5 as an example.

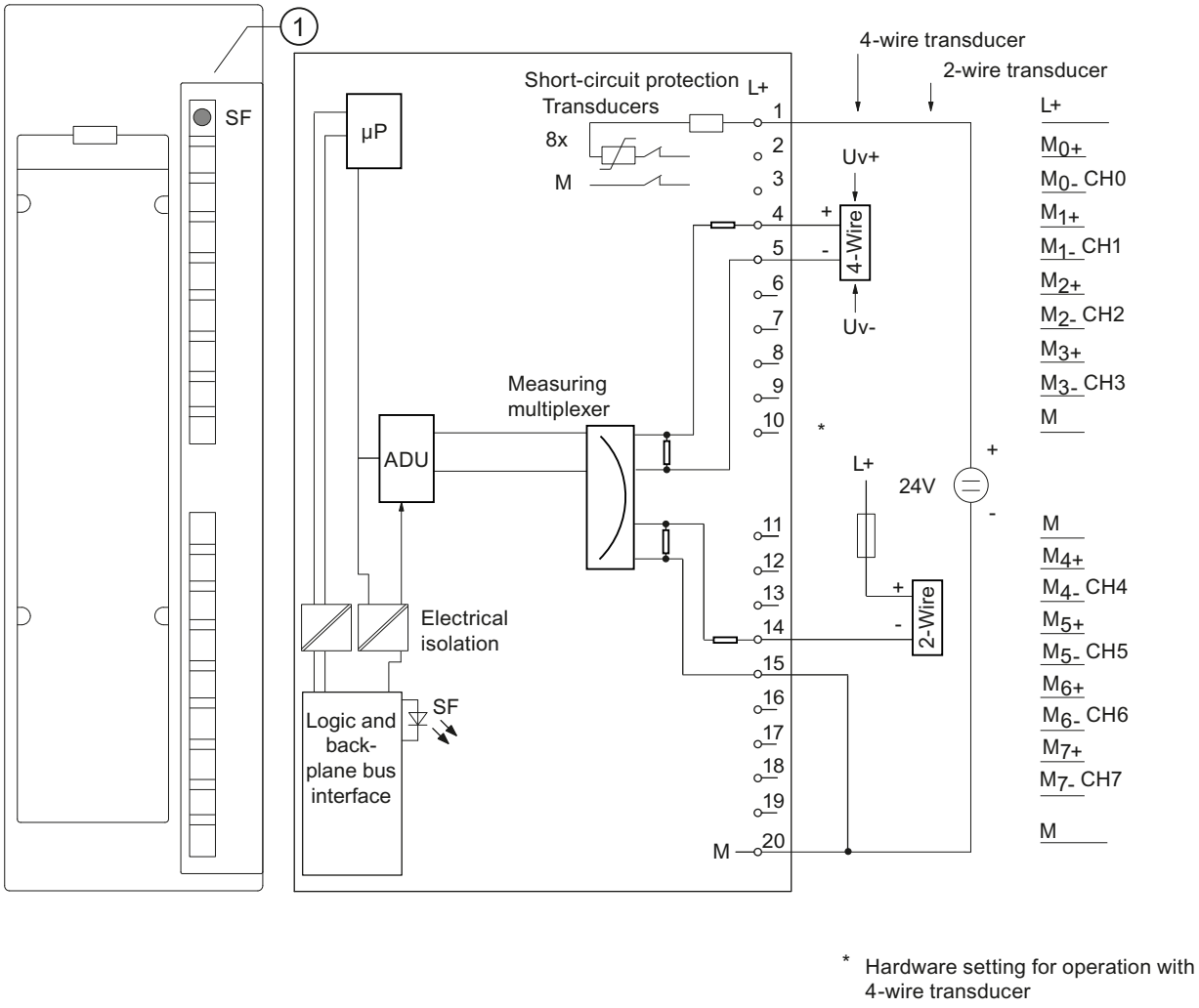

① Group error display - red (SF LED)

Figure 10-10 Module view and block diagram of the AI 8 x 16 Bit in 4-wire transducer mode

Redundant use

In redundant mode, the modules AI 8 x 16 Bit are present in duplicate and are configured and operated redundantly.

- If in redundant mode the substitute value behavior of the current outputs is set to "has no current or voltage", in STOP state of the CPU or when the Profibus connection fails, a current of approximately 115 µA is nevertheless output at each channel.
- Redundancy is only possible in 4-wire transducer operation of the module. Configuration as a 4-wire transducer in HW-Config is required (see figure showing connection of 2-wire transducer). Terminals 10 and 11 on the front panel connector must not be connected.
- In redundant mode, the voltage drop on both modules must be observed. To ensure a sufficient voltage supply for the transducer, the voltage drop on both modules and the voltage drop on the wiring and on the transducer must be observed (series connection). With a sensor current of 22 mA, a voltage drop of approximately 3.3 V occurs on each module. If you are using the protection circuit with Zener diodes shown below and you replace the modules, note that the voltage drop on the removed module is the Zener voltage (5.1 V) and the voltage drop on the inserted module continues to be 3.3 V.

Redundant connection of a 2-wire transducer

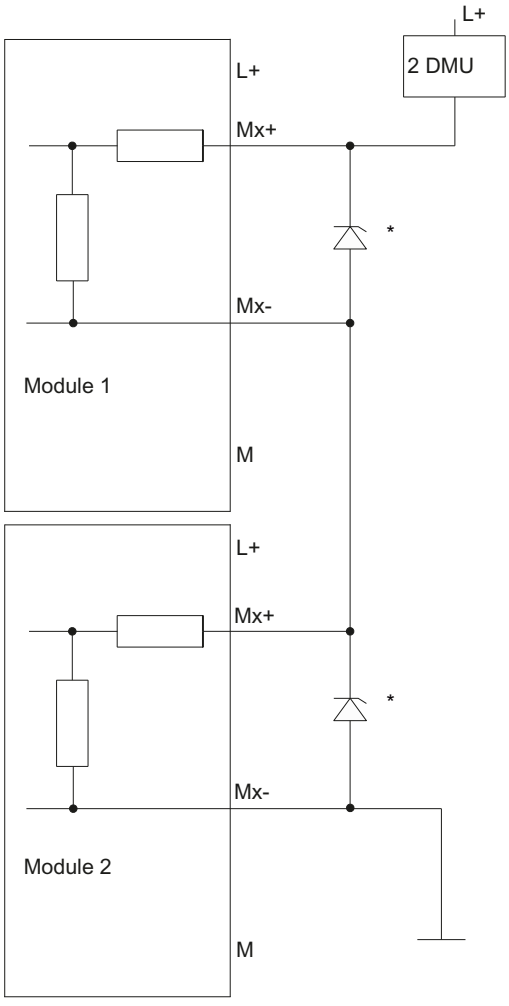

* The Zener diodes 5.1 V (e.g., BZX85C5V1) are only required if a module is pulled and the system should continue to run.

Redundant connection of a 4-wire transducer

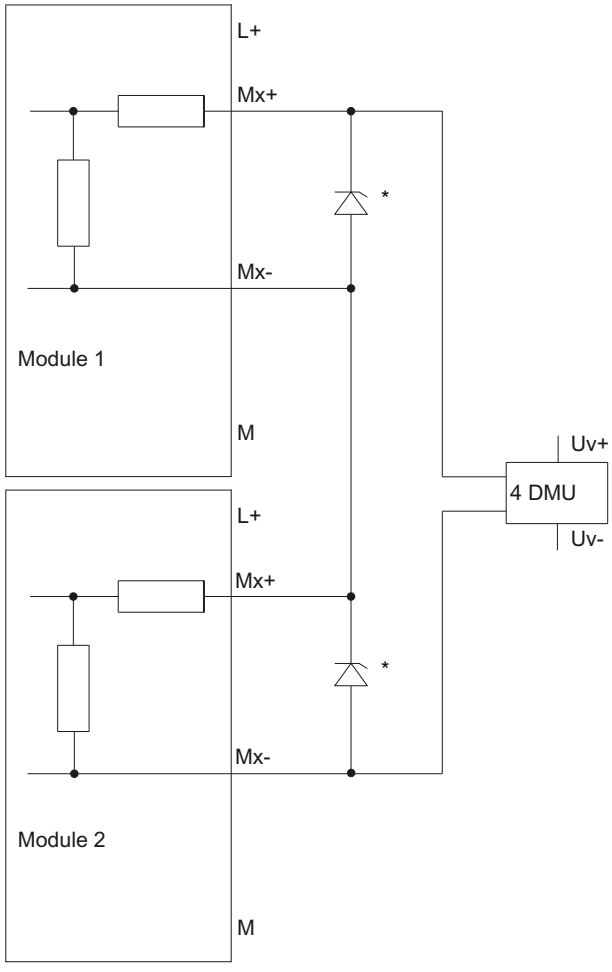

* The Zener diodes 5.1 V (e.g., BZX85C5V1) are only required if a module is pulled and the system should continue to run.

Technical specifications of the AI 8 x 16 Bit

Technical specifications	
Dimensions and weight	
Dimensions W x H x D (mm)	40 x 125 x 117
Weight	Approx. 205 g
Module-specific data	
Number of inputs Number of supply outputs	8 8
Cable length, shielded	Max. 800 m
Temperature range	
• Horizontal mounting position	0 °C to 60 °C
• Vertical mounting position	0 °C to 40 °C
Voltages, currents, potentials	
Rated load voltage L+ • Reverse polarity protection	24 V DC Yes
Power supply of the 2-wire transducer • Short-circuit-proof	Yes Short-circuit current approx. 40 to 60 mA
Electrical isolation	
• Between the channels and backplane bus	Yes
• Between channels	Permissible common-mode voltage in the case of 4-wire transducer: 75 V DC 60 V AC
• Between the channels and load voltage L+	For 2-wire transducer: No For 4-wire transducer: Yes
• Between the backplane bus and load voltage L+	Yes
Isolation, designed for basic isolation	
• Between the channels and backplane bus (U_{ISO})	75 V DC 60 V AC
• Between the channels and load voltage L+	For 4-wire transducer: 75 V DC 60 V AC
• Between the backplane bus and load voltage L+	75 V DC 60 V AC
Isolation tested	
• Channels from backplane bus and load voltage L+	500 V AC or 707 V DC, type test
• Backplane bus from load voltage L+	500 V AC or 707 V DC, type test
• Between channels	No
Current consumption	

Technical specifications			
• From backplane bus	Max. 120 mA		
• From load voltage L+ (supply current of all connected transducers)	Typ. 20 mA per transducer		
Power loss of the module	Approx. 1.5 W		
Analog value formation			
Measuring principle	SIGMA-DELTA		
Integration time/ interference frequency suppression (per channel)	60 Hz	50 Hz	10 Hz
• Configurable	Yes	Yes	Yes
• Integration time in ms	16.6	20	100
• Basic conversion time including integration time in ms (per channel)	55	65	305
• Basic execution time of the module (all channels enabled) in ms	440	520	2440
• Resolution in bits + sign (including overrange)	15 + sign	15 + sign	15 + sign
• Smoothing of the measured values	Yes, assignable in 4 levels:		
	Level: None Weak Medium Strong	Time constant: 1 x cycle time * 4 x cycle time * 32 x cycle time * 64 x cycle time *	
Noise suppression, error limits			
Interference voltage suppression for f = n x (f1 ± 1 %), (f1 = interference frequency)			
• Common-mode interference (only possible with 4-wire transducers (Ucm < 60 V AC)	> 100 dB		
• Series-mode interference (peak value of disturbance < nominal value of input range)	> 40 dB		
Crosstalk attenuation between inputs (U_{ISO} < 60 V)	> 70 dB		
Operating error	± 0.15%		
Basic error	± 0.1%		
Temperature error (relative to input range)	± 0.001%/K		
Linearity error (relative to input range)	± 0.01 %		
Repeatability (in steady-state condition at 25 °C, relative to input range)	± 0.1%		
Status, interrupts, diagnostics			
Status display	No		
Group error display (SF LED)	Yes		
Diagnostic interrupts	Configurable		
Diagnostic functions	Configurable		
Characteristics of the transducer supply			

Technical specifications		
• Output voltage for transducer and cable with 22 mA transducer current (measurement resistance on module already taken into account)	≥ 18 V (when UN = 24 V)	
Sensor selection data		
Input ranges (rated values / input resistance)		
• Current	0 mA to 20 mA 4 mA to 20 mA ± 20 mA	140 Ω 140 Ω 140 Ω
Permissible input current for current input (destruction limit)	40 mA	

* Cycle time = Basic conversion time per channel x Number of enabled channels

10.4.2.1 Parameters of the AI 8 x 16 Bit

Parameter assignment

The parameters are assigned using the parameter assignment dialog of HW Config

Parameters of the AI 8 x 16 Bit

The table below provides an overview of the assignable parameters and their default settings for the AI 8 x 16 Bit.

The default settings apply when you have not assigned parameters in HW Config or you have not changed any parameters.

Table 10-11 Parameters of the AI 8 x 16 Bit

Parameter	Value range	Default setting	Scope
Diagnostic interrupt enable	Yes / No	Yes	Module
Diagnostics • Group diagnostics analog • Wire break check	 Yes / No Yes / No	 Yes Yes	 Channel Channel
Smoothing	None Weak Medium Strong	None	Channel
Measurement type	Disabled 4WMT * current 2WMT * current	4WMT * current	Module

Parameter	Value range	Default setting	Scope
Measuring range	Disabled 0...20 mA ** 4...20 mA ± 20 mA **	4...20 mA	Channel
Interference frequency suppression / integration time	60 Hz (16.6 ms) 50 Hz (20 ms); 10 Hz (100 ms);	50 Hz (20 ms)	Channel

* 4WMT = 4-wire transducer; 2WMT = 2-wire transducer

** Can only be set for 4-wire transducer

Group diagnostics analog

The diagnostics parameter "Group diagnostics" enables the signaling of channel-specific errors to be switched off, with the exception of parameter assignment errors.

Smoothing

Through the smoothing of analog values, a stable analog signal is made available for further processing.

The smoothing of analog values is useful when measured values change rapidly.

The measured values are smoothed by means of digital filtering. Smoothing is achieved by the module calculating mean values from a defined number of converted (digitized) analog values.

You assign smoothing in 4 different levels (none, weak, medium, or strong). The level determines the number of analog signals used to form the mean value.

The stronger the smoothing is, the more stable the smoothed analog value will be and the longer it will take until the smoothed analog signal is available after a step response.

Wire break check

Wire break detection is not possible for the current ranges 0 to 20 mA and ± 20 mA.

For the current range from 4 to 20 mA, provided the wire break check is enabled, a current value below the input current of I ≤ 1.185 mA is interpreted as a wire break.

If the wire break check is enabled, there is no underflow detection.

10.4.2.2 Diagnostics of the AI 8 x 16 Bit

Introduction

Module faults and channel faults are displayed via the group error display (SF LED) and signaled via the diagnostic data records 0/1.

Diagnostic messages and possible corrective measures

The table below provides an overview of the diagnostic messages of the AI 8 x 16 Bit.

Table 10-12 Diagnostic messages of the AI 8 x 16 Bit and possible corrective measures

Diagnostic message	Configurable	Possible cause of error	Corrective measure
External auxiliary voltage missing	No	No supply voltage L+ of the module	Feed supply L+
Module parameters not assigned	No	Startup error	Reassign the module parameters
Incorrect parameters	No	One parameter, or the combination of parameters, is not plausible	Reassign the module parameters
Time monitoring tripped	No	Intermittently high electromagnetic interference	Eliminate the interference
EPROM error	No	Module defective	Replace the module
RAM error	No	Module defective	Replace the module
ADC/DAC error	No	Module defective	Replace the module
Parameter assignment error	No	One parameter, or the combination of parameters, is not plausible	Reassign the module parameters
		The wire jumper (terminals 10 and 11) does not match the parameter assignment of the measurement type.	Check wire jumper
Wire break	Yes	The connection of the transducer is interrupted	Check the wiring
		Resistance of sensor protection circuit too high	Use a different type of sensor or modify the wiring, for example, use cables with larger cross-section
		Channel not connected (open)	Disable the channel group ("Measurement type" parameter) or connect the channel
Low limit violation of measuring range / underrange	Yes (Group diagnostics)	Analog value below the underrange	Check the measuring range selection
		In the measuring range 4 mA to 20 mA, sensor may be connected with reverse polarity.	Check terminals
High limit violation of measuring range / underrange	Yes (Group diagnostics)	Analog value above the overrange	Assign a different measuring range

10.4.3 Analog input module AI 8 x 16 Bit HART

Article numbers

Standard module: 6ES7 650-8AT60-0AA0

Module with conformal coating: 6ES7 650-8AT60-1AA0

Properties

The AI 8 x 16 Bit HART analog input module is characterized by the following properties:

- 8 inputs and 8 outputs (for supplying of 2-wire transducers)
- HART communication, parameters can be assigned channel-selective
  In non-redundant operation, connection of a resistance of approximately 100 in series with the transducer is recommended.
- Resolution of 15 bits + sign (regardless of integration time)
- Setting of the transducer for each module (via a jumper at terminals 10 and 11):
  – 2-wire transducer current, only in measuring range 4 ... 20 mA
  – 4-wire transducer current
- Parameters for measuring range can be assigned per channel
  - 0 ... 20 mA / ± 20 mA (without HART use)
  - 4 ... 20 mA (with/without HART use)
- Configurable smoothing for each channel
- Configurable integration time/interference frequency suppression for each channel
- Configurable diagnostics
- Configurable diagnostic interrupt
- Electrical isolation
  – Channels electrically isolated for 4-wire transducer to load voltage L+
  – Channels electrically isolated from IM 650
- Group error display (SF LED)
- Configuration in Run (CiR) supported
- Configuration of HART variables

For basic information on the connection and operation of HART field devices and the corresponding use of HART variables, see "HART" section.

Connection and circuit diagram of the AI 8 x 16 Bit HART

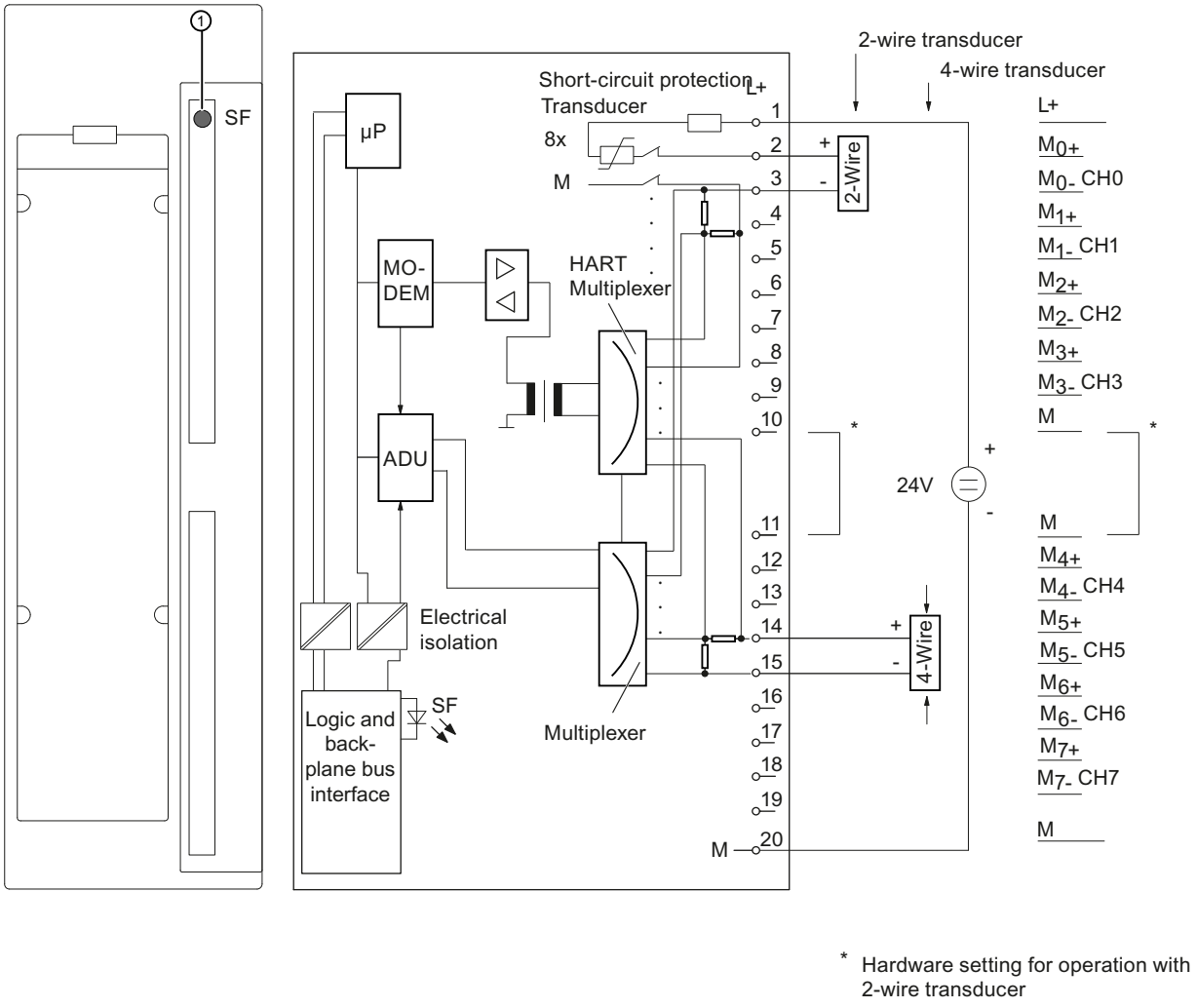

① Group fault display –red (SF LED)

Figure 10-11 Connection and circuit diagram of the AI 8 x 16 Bit HART

Cables for analog signals

The diagrams below do not show the connecting lines required for connecting the electrical potentials of the analog input module and the encoder.

Therefore, please note the generally applicable information on the connection of transducers in the *Automation system SIMATIC S7-300 Module data* manual on the Internet (http://support.automation.SIEMENS.com/WW/view/en/8859629)

Abbreviations used in the following connection diagrams

In the following connection diagrams for 2- and 4-wire transducers, the abbreviations used have the following meaning:

L+ Power supply connection 24 V DC
M Ground connection
M_x+ Measurement cable (positive)
M_x- Measurement cable (negativ)
U_V+ Transducer power supply (positive)
U_V- Transducer power supply (negative)
U_{ISO} Electric potential difference between MANA and M-connection of IM650

Connect 2-wire transducer

When using the module for 2-wire transducer operation, a jumper must be inserted between connections 10 and 11. This activates the short-circuit-protected transducer supply of the module and implements the jumpering at the analog input.

All channels of the module operate in 2-wire transducer mode in this case.

The parameter assignment is made via HW Config as "2WMT current"

The 2-wire transducer converts the measured variable to a current. The 2-wire transducers must be isolated measuring sensors.

Through the use of L+, M for common supply of the transducers, the permitted potential difference between the channels is revoked. U_{ISO} therefore does not apply in the case of 2-wire transducers.

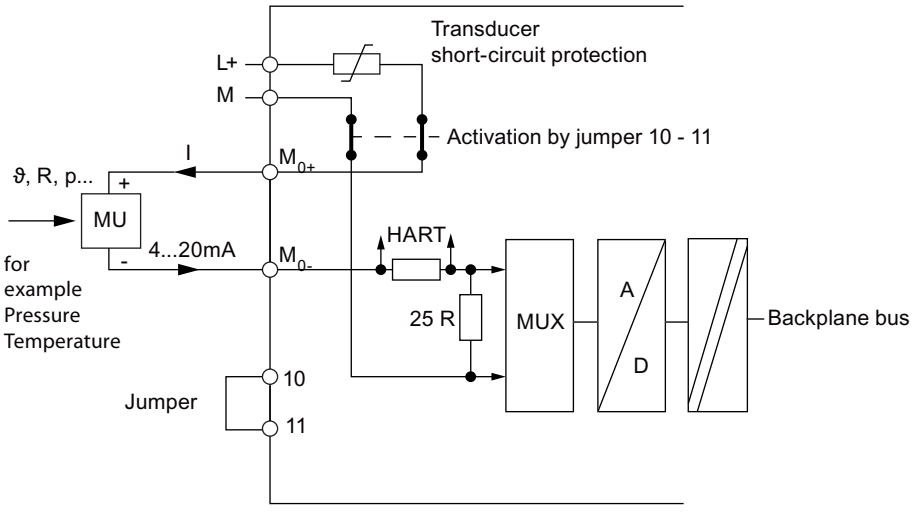

Figure 10-12 Connection of a 2-wire transducer

You can also use a 4-wire transducer with separate supply. The figure below shows the options for connecting a 4-wire transducer to a module configured for 2-wire transducers.

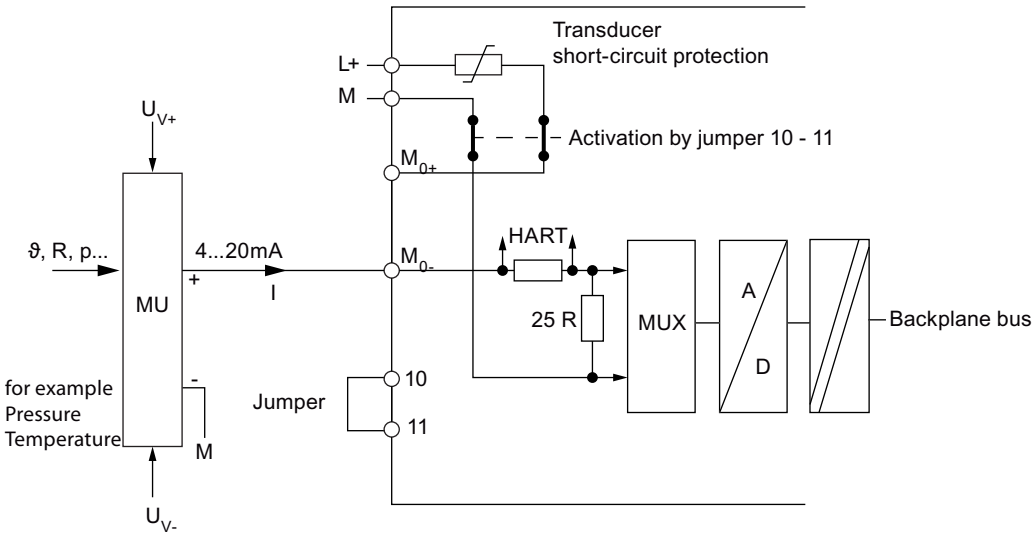

Figure 10-13 Connection of a 4-wire transducer to a module configured for 2-wire transducers

Connect 4-wire transducer

When the module is used for 4-wire transducer operation, terminals 10 and 11 must not be jumpered.

The 4-wire transducers have a separate supply voltage

All channels of the module operate in 4-wire transducer mode in this case.

The parameter assignment is made via HW Config as "4WMT current"

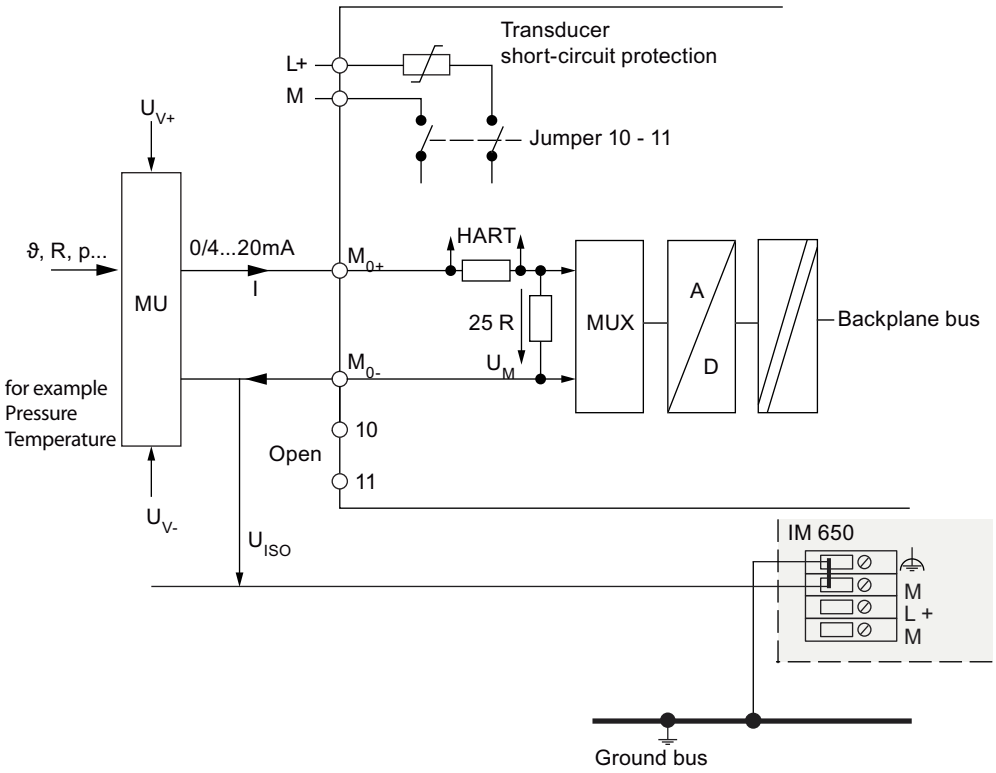

Figure 10-14 Connection of a 4-wire transducer

You can also use a 2-wire transducer with separate supply. The figure below shows the options for connecting a 2-wire transducer to a module configured for 4-wire transducers.

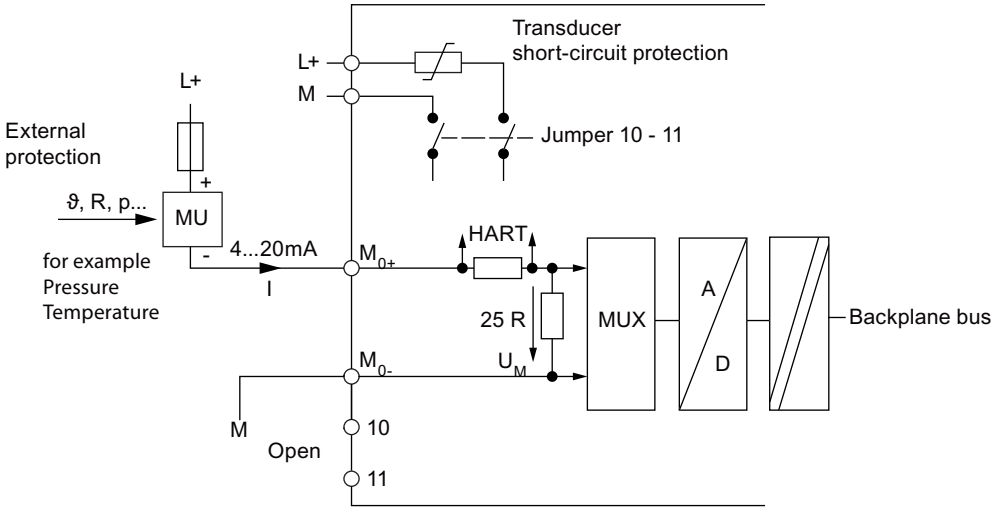

Figure 10-15 Connection of a 2-wire transducer to a module configured for 4-wire transducers

Redundant use

In redundant operation the AI 8 x 16 Bit HART modules are available twice and are configured and operated redundantly.

- In redundant operation, no other HART masters, such as a hand-held device, may be connected.
- If in redundant mode the substitute value behavior of the current outputs is set to "has no current or voltage", in STOP state of the CPU or when the Profibus connection fails, a current of approximately 115 µA is nevertheless output at each channel.
- Redundancy is only possible in 4-wire transducer operation of the module. Via HW Config you have to configure as 4-wire transducer. Terminals 10 and 11 on the front panel connector must not be connected.
- In redundant mode, the voltage drop on both modules must be observed. In order to ensure a sufficient power supply to the transducer, the voltage drop at the two modules and the voltage drop at the wiring and the transducer must be observed (series connection!). With an encoder current of 22 mA, approx. 3.3 V drops at each module. If you are using the protection circuit with Zener diodes shown below and you replace the modules, note that the voltage drop on the removed module is the Zener voltage (5.1 V) and the voltage drop on the inserted module continues to be 3.3 V.

Redundant connection of a 2-wire transducer

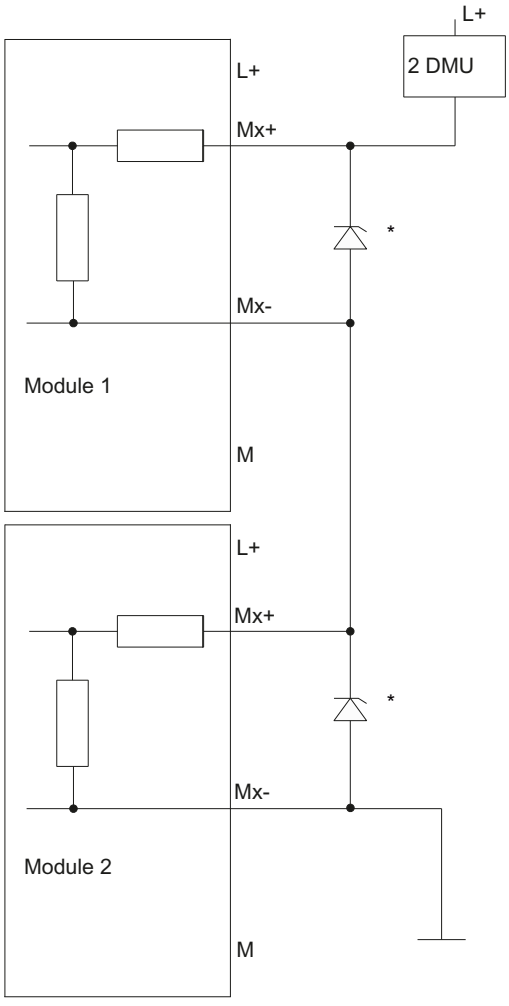

* The Zener diodes 5.1 V (e.g., BZX85C5V1) are only required if a module is pulled and the system should continue to run.

Redundant connection of a 4-wire transducer

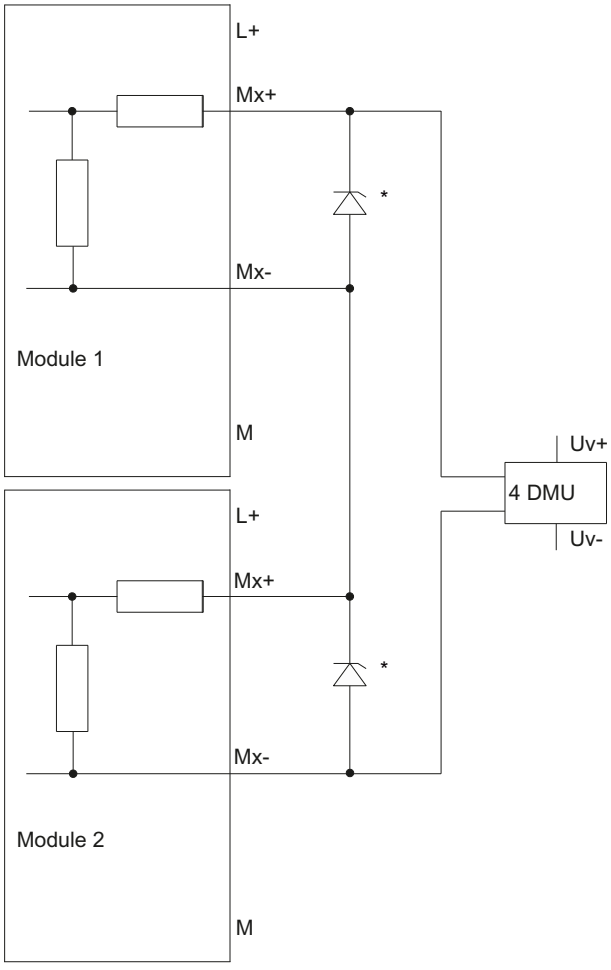

* The Zener diodes 5.1 V (e.g., BZX85C5V1) are only required if a module is pulled and the system should continue to run.

Table 10-13 **Technical specifications of the AI 8 x 16 Bit HART**

Technical specifications	
Dimensions and weight	
Dimensions W x H x D (mm)	40 x 125 x 117
Weight	Approx. 205 g
Module-specific data	
Number of inputs Number of supply outputs	8 8
Cable length, shielded	Max. 800 m
Temperature range	
• Horizontal mounting position	0 °C to 60 °C
• Vertical mounting position	0 °C to 40 °C
Voltages, currents, potentials	
Rated load voltage L+ • Reverse polarity protection	24 V DC Yes
Power supply of the 2-wire transducer • Short-circuit-proof	Yes Short-circuit current approx. 40 to 60 mA
Electrical isolation	
• Between the channels and backplane bus	Yes
• Between channels	Permissible common-mode voltage in the case of 4-wire transducer: 75 V DC 60 V AC
• Between the channels and load voltage L+	For 2-wire transducer: No For 4-wire transducer: Yes
• Between the backplane bus and load voltage L+	Yes
Isolation, designed for basic isolation	
• Between the channels and backplane bus (U_{ISO})	75 V DC 60 V AC
• Between channels and load voltage L+	For 4-wire transducer: 75 V DC 60 V AC
• Between the backplane bus and load voltage L+	75 V DC 60 V AC
Isolation tested	
• Channels from backplane bus and load voltage L+	500 V AC or 707 V DC, type test
• Backplane bus from load voltage L+	500 V AC or 707 V DC, type test
• Between channels	No
Current consumption	

Technical specifications			
• From backplane bus	Max. 120 mA		
• From load voltage L+ (supply current of all connected transducers)	Typ. 20 mA per connected transducer		
Power loss of the module	Approx. 1.5 W		
Analog value formation			
Measuring principle	SIGMA-DELTA		
Integration time/ interference frequency suppression (per channel)	60 Hz	50 Hz	10 Hz
• Configurable	Yes	Yes	Yes
• Integration time in ms	16.6	20	100
• Basic conversion time including integration time in ms (per channel)	55	65	305
• Basic execution time of the module (all channels enabled) in ms	440	520	2440
• Resolution in bits + sign (including overrange)	15 + sign	15 + sign	15 + sign
• Smoothing of the measured values	Yes, assignable in 4 levels:		
	Level: None Weak Medium Strong	Time constant: 1 x cycle time * 4 x cycle time * 32 x cycle time * 64 x cycle time *	
Noise suppression, error limits			
Interference voltage suppression for f = n x (f1 ± 1 %), (f1 = interference frequency)			
• Common-mode interference (only possible with 4-wire transducers (Ucm ≤ 20 V AC)	> 100 dB		
• Series-mode interference (peak value of disturbance < nominal value of input range)	> 40 dB		
Crosstalk attenuation between inputs (U_{ISO} < 60 V)	> 70 dB		
Operating error	± 0.15%		
Basic error	± 0.1%		
Temperature error (relative to input range)	± 0.001%/K		
Linearity error (relative to input range)	± 0.01 %		
Repeatability (in steady-state condition at 25 °C, relative to input range)	± 0.1%		
Influence of a HART signal modulated on the input signal in relation to the input range (in addition to the basic error) **			
Status, interrupts, diagnostics			
Status display	No		
Group error display (SF LED)	Yes		
Diagnostic interrupt	Configurable		
Diagnostic functions	Configurable		

Technical specifications		
HART communication		
Monodrop/multidrop operation	Monodrop only	
Primary / secondary master	Only primary master ***	
Characteristics of the transducer supply		
• Supply voltage for transducer with 22 mA transducer current (measurement resistance on module already taken into account)	≥ 18 V (when UN = 24 V)	
Sensor selection data		
Input ranges (rated values / input resistance)		
• Current	0 mA to 20 mA 4 mA to 20 mA ± 20 mA	140 Ω 140 Ω 140 Ω
Permissible input current for current input (destruction limit)	40 mA	

* Cycle time = Basic conversion time per channel x Number of enabled channels

** For HART use, an integration time of 100 ms is recommended. The parameter assignment of a smoothing level additionally improves the analog signal behavior.

*** In redundant operation the module with the higher address is the secondary master.

10.4.3.1 Parameters of the AI 8 x 16 Bit HART

Parameter assignment

The parameters are assigned using the parameter assignment dialog of HW Config

Parameters of the AI 8 x 16 Bit HART

You can find an overview of the assignable parameters and their default settings for the AI 8 x 16 bits HART in the following table.

The default settings apply when you have not assigned parameters in HW Config or you have not changed any parameters.

Table 10-14 Parameters of the AI 8 x 16 Bit HART

Parameter	Value range	Default	Scope
Diagnostic interrupt enable	Yes/No	Yes	Module
Diagnostics			
• Group diagnostics analog	Yes/No	Yes	Channel
• Wire break check	Yes/No	Yes	Channel
• HART group diagnostics	Yes/No	Yes	Channel

Parameter	Value range	Default	Scope
Smoothing	None Weak Medium Strong	None	Channel
Measurement type	Disabled 4WMT * current 2WMT * current	4WMT * current	Module
Measuring range	Disabled 0...20 mA ** 4...20 mA ± 20 mA **	4...20 mA	Channel
Interference frequency suppression / integration time	60 Hz (16.6 ms) 50 Hz (20 ms); 10 Hz (100 ms);	50 Hz (20 ms)	Channel
HART • HART function*** • Repetitions	 Yes/No 0-10	 Yes 10	 Channel Channel

* 4WMT = 4-wire transducer; 2WMT = 2-wire transducer

** Can only be set for 4-wire transducer

*** Can only be activated with measuring range 4 ... 20 mA

Measurement type/measuring range

The resolution of the analog values is 15 bits + sign.

Table 10-15 Measuring range of the AI 8 x 16 Bit HART

Selected type of measurement	Measuring range
2-wire transducer	4 mA to 20 mA
4-wire transducer	0 mA to 20 mA 4 mA to 20 mA ± 20 mA

Group diagnostics analog

The diagnostics parameter "Group diagnostics" enables the signaling of channel-specific errors to be switched off, with the exception of parameter assignment errors.

Interference frequency suppression

Suppresses the interference that is caused by the frequency of the alternating voltage network used.

When HART operation is activated, an interference frequency suppression of 10 Hz is recommended to prevent the HART signal from influencing the analog value.

Smoothing

Through the smoothing of analog values, a stable analog signal is made available for further processing.

The smoothing of analog values is useful when measured values change rapidly.

The measured values are smoothed by means of digital filtering. Smoothing is achieved by the module calculating mean values from a defined number of converted (digitized) analog values.

You assign smoothing in 4 different levels (none, weak, medium, or strong). The level determines the number of analog signals used to form the mean value.

The stronger the smoothing is, the more stable the smoothed analog value will be and the longer it will take until the smoothed analog signal is available after a step response.

Wire break check

Wire break detection is not possible for the current ranges 0 to 20 mA and ± 20 mA.

For the current range from 4 to 20 mA, provided the wire break check is enabled, a current value below the input current of I ≤ 1.185 mA is interpreted as a wire break.

If the wire break check is enabled, there is no underflow detection.

HART function

HART communication can be activated in the measuring range 4 ... 20 mA.

HART group diagnostics

The diagnostics parameter "HART group diagnostics" can be used to disable the flagging of channel-specific HART status information (HART device status) and HART communication errors.

Repetitions

Specifies the number of HART frame repetitions. If the AI 8 x 16 Bit HART receives no response or a response with errors to a HART frame sent to the field device, the frame is repeated i.e. sent to the field device again.

10.4.3.2 Diagnostics of the AI 8 x 16 Bit HART

Introduction

Module faults and channel faults are displayed via the group error display (SF LED) and signaled via the diagnostic data records 0/1.

Diagnostic messages and possible corrective measures

The following table provides an overview of the diagnostics messages of the AI 8 x 16 Bit HART.

Table 10-16 Diagnostic messages of the AI 8 x 16 Bit and possible corrective measures

Diagnostic message	Configurable	Possible cause of error	Corrective measure
External auxiliary voltage missing	No	No supply voltage L+ of the module	Feed supply L+
Module parameters not assigned	No	Startup error	Reassign the module parameters
Incorrect parameters	No	One parameter, or the combination of parameters, is not plausible	Reassign the module parameters
Time monitoring tripped	No	Intermittently high electromagnetic interference	Eliminate the interference
EPROM error	No	Module defective	Replace the module
RAM error	No	Module defective	Replace the module
ADC/DAC error	No	Module defective	Replace the module
Parameter assignment error	No	One parameter, or the combination of parameters, is not plausible	Reassign the module parameters
		The wire jumper (terminals 10 and 11) does not match the parameter assignment of the measurement type.	Check wire jumper
Wire break	Yes	The connection of the transducer is interrupted	Check the wiring
		Resistance of sensor protection circuit too high	Use a different type of sensor or modify the wiring, for example, use cables with larger cross-section
		Channel not connected (open)	Disable the channel group ("Measurement type" parameter) or connect the channel
Low limit violation of measuring range / underrange	Yes (Group diagnostics)	Analog value below the underrange	Check the measuring range selection
		In the measuring range 4 mA to 20 mA, sensor may be connected with reverse polarity.	Check terminals
High limit violation of measuring range / underrange	Yes (Group diagnostics)	Analog value above the overrange	Assign a different measuring range

Diagnostic message	Configurable	Possible cause of error	Corrective measure
HART communication error	Yes (HART group diagnostics).	• HART field device is not responding • Timing error	• Check the process wiring • Correct the parameter assignment • Set output current of ≥4 mA • Increase the number of assigned repetitions • If necessary, connect a capacitor of approx. 150nF in parallel with the transducer

Diagnostic message	Configurable	Possible cause of error	Corrective measure
Primary variable outside of limits	Yes (HART group diagnostics).	• Incorrect parameters in the HART device • HART device has simulation and simulation is adjusted to "Primary variable outside of limits" • Incorrect measuring point • Primary variable assigned outside of limits	• Check the parameter assignment of the HART device • Correct the simulation • Check if the correct sensor is connected
Non-primary variable outside of limits	Yes (HART group diagnostics).	• Incorrect parameters in the HART device • HART device has simulation and simulation is adjusted to "Non-primary variable outside of limits" • Incorrect measuring point • Variable assigned outside of limits	
HART analog output current saturated	Yes (HART group diagnostics).	• Incorrect parameters in the HART device • HART device has simulation and simulation is set to a measured value that is too high • Incorrect measuring point	
HART analog output current specified	Yes (HART group diagnostics).	• Incorrect parameters in the HART device • HART device has simulation and simulation is set to a measured value that is too high • Incorrect measuring point	
HART additional status available *	Yes (HART group diagnostics).	HART device provides additional status.	
Maintenance demanded	Yes (HART group diagnostics).	Maintenance demanded pending	
HART re-parameterization, signaled by the connected field device	Yes (HART group diagnostics).	In the HART device status (= HART status bytes), the identifier for reconfiguration of the HART field device has been set.	
HART group error	Yes (HART group diagnostics).	Communication and command errors during HART operation that affect the connected HART field devices.	

* Is automatically deleted after 3 s

10.4.4 Analog input module AI 16 x 16 Bit

Article numbers

Standard module: 6ES7 650-8AK70-0AA0

Module with conformal coating: 6ES7 650-8AK70-1AA0

Properties

The analog input module AI 16 x 16 Bit is characterized by the following properties:

- 16 inputs and 16 outputs (for supplying of 2-wire transducers)
- HART conforming
- Resolution of 15 bits + sign (regardless of integration time)
- Setting of the transducer for each module (via a jumper at terminals 10 and 11):
  – 2-wire transducer current, only in measuring range 4 ... 20 mA
  – 4-wire transducer current
- Configurable measuring range for each channel, changeover to redundant 4-wire mode (via jumper at terminals 30 and 31)
  - 0 mA to 20 mA
  - ± 20 mA
  - 4 mA to 20 mA
- Configurable smoothing for each channel
- Configurable integration time/interference frequency suppression for each channel
- Configurable diagnostics
- Configurable diagnostic interrupt
- Group error display (SF LED)
- Configuration in Run (CiR) supported

Wiring and block diagrams of the AI 16 x 16 Bit with 2-wire transducer operation

If the module is used in 2-wire transducer mode, a jumper must be inserted between terminals 10 and 11. This activates the short-circuit-protected transducer supply of the module and implements the jumpering at the analog input.

All channels of the module operate in 2-wire transducer mode in this case. This is shown in the figure below using channel 9 as an example.

The parameter assignment is made via HW Config as "2WMT current"

The 2-wire transducer converts the measured variable to a current. The 2-wire transducers must be isolated measuring sensors.

Through the use of L+, M for common supply of the transducers, the permitted potential difference between the channels is revoked.

You can also use a 4-wire transducer with separate supply. This is shown in the figure below using channel 13 as an example.

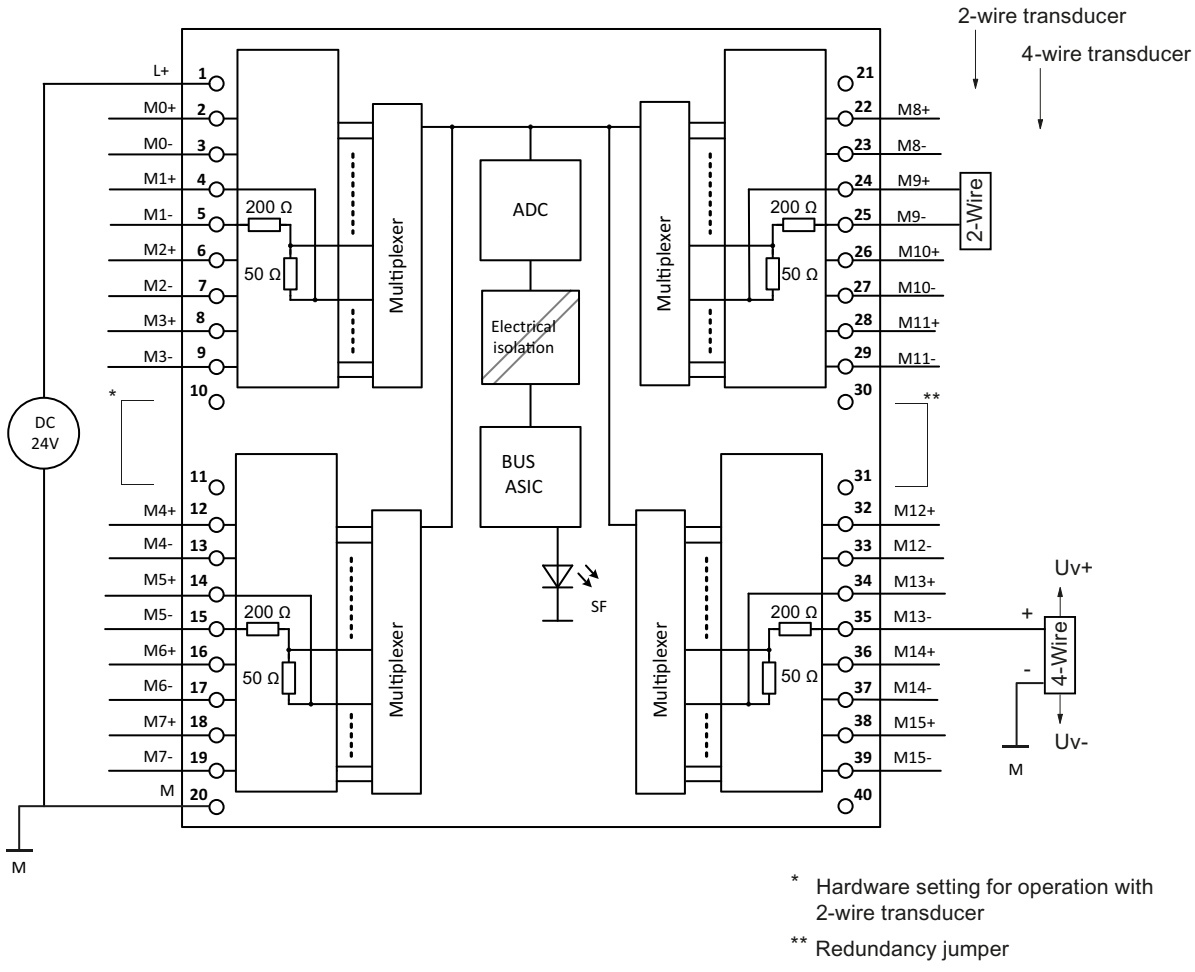

Figure 10-16 AI 16 x 16 Bit with 2-wire transducer operation

Wiring and block diagrams of the AI 16 x 16 Bit with 4-wire transducer operation

When the module is used for 4-wire transducer operation, terminals 10 and 11 must not be jumpered.

All channels of the module operate in 4-wire transducer mode in this case. Shown using channel 9 as an example.

The parameter assignment is made via HW Config as "4WMT current"

The 4-wire transducers have a separate supply voltage.

You can also use a 2-wire transducer with separate fused supply. This is shown in the figure below using channel 13 as an example.

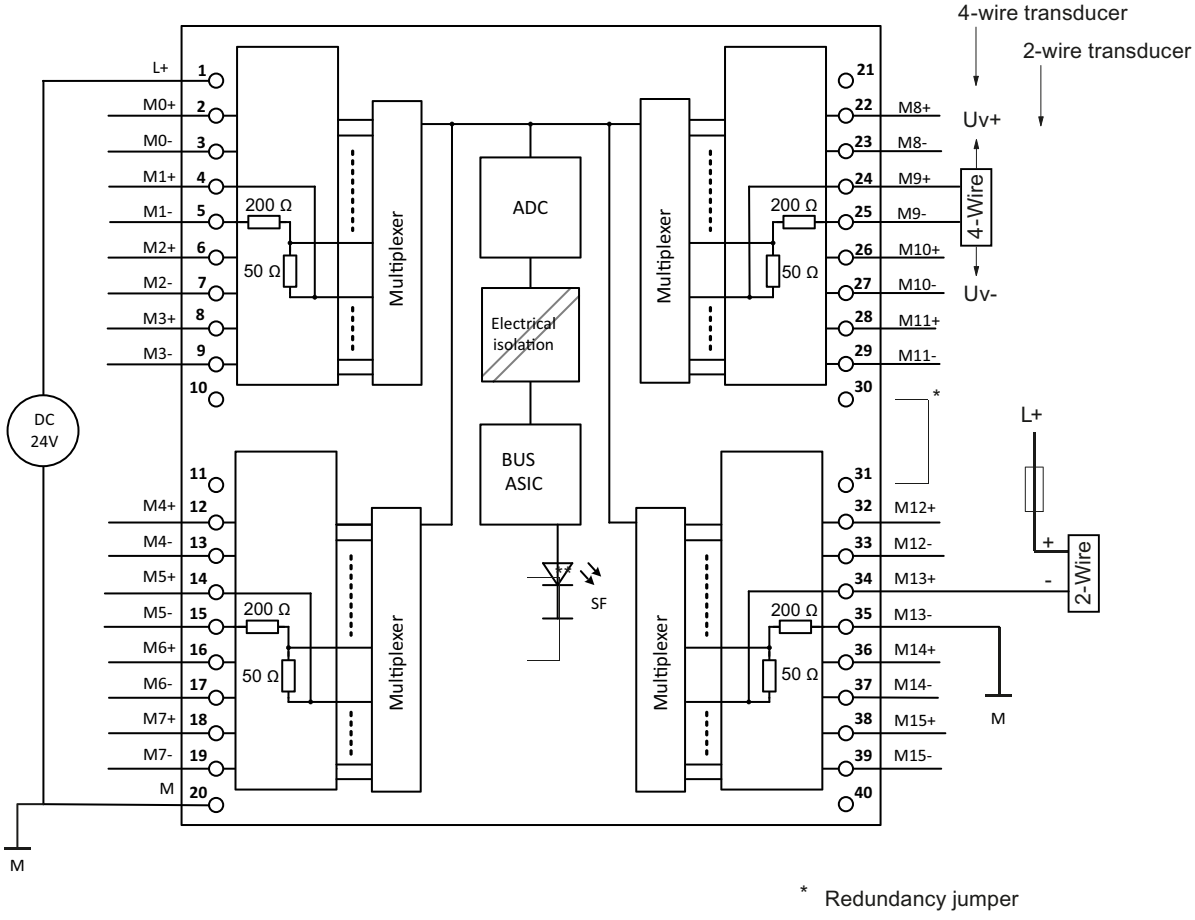

Figure 10-17 AI 16 x 16 Bit with 4-wire transducer operation

Redundant use

In redundant mode, the modules AI 16 x 16 Bit are present in duplicate and are configured and operated redundantly.

- In redundant operation, terminals 30 and 31 must be jumpered on both redundantly operated modules.
- Redundancy is only possible in 4-wire transducer operation of the module. Configuration as a 4-wire transducer in HW-Config is required (see figure showing connection of 2-wire transducer). Terminals 10 and 11 on the front panel connector must not be connected.

  Note

  If you connect terminals 30 and 31, the module is changed over to redundant 4-wire transducer operation regardless of a connection of terminals 10 and 11.

- In redundant mode, the voltage drop on both modules must be observed. To ensure a sufficient voltage supply for the transducer, the voltage drop on both modules and the voltage drop on the wiring and on the transducer must be observed (series connection). With a sensor current of 22 mA, a voltage drop of approximately 3.3 V occurs on each module. If you are using the protection circuit with Zener diodes shown below and you replace the modules, note that the voltage drop on the removed module is the Zener voltage (5.1 V) and the voltage drop on the inserted module continues to be 3.3 V.

Redundant connection of a 2-wire transducer

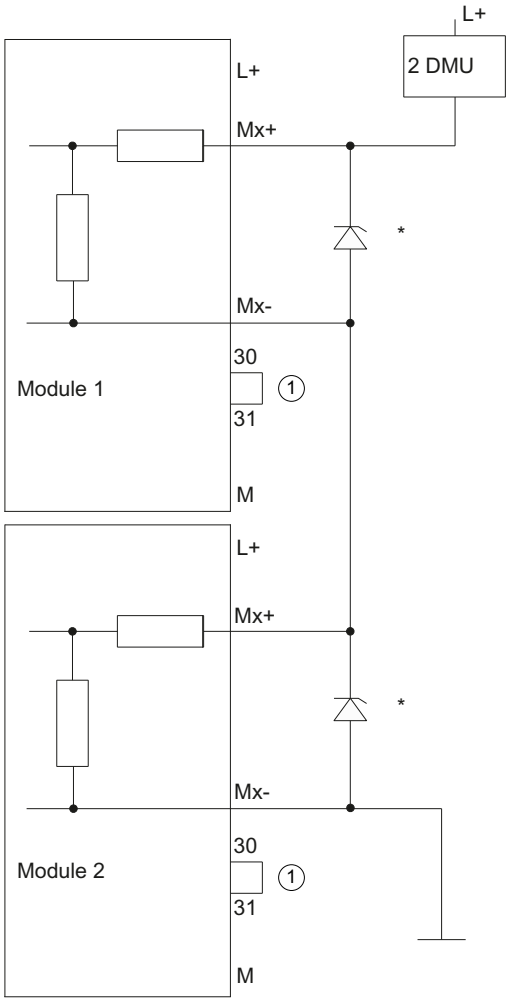

① Redundancy jumper

* The Zener diodes 5.1 V (e.g., BZX85C5V1) are only required if a module is pulled and the system should continue to run.

Redundant connection of a 4-wire transducer

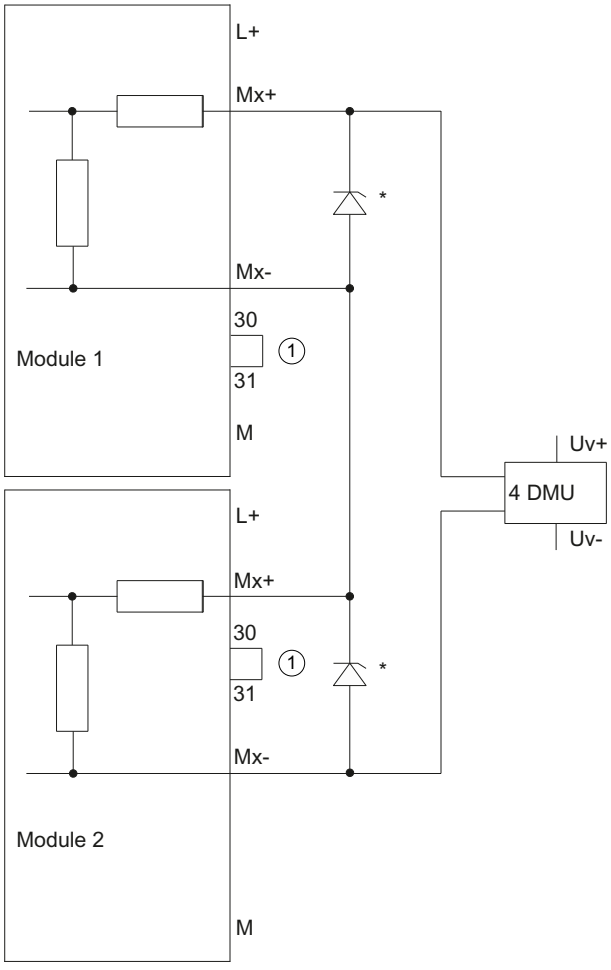

① Redundancy jumper

* The Zener diodes 5.1 V (e.g., BZX85C5V1) are only required if a module is pulled and the system should continue to run.

Technical specifications of the AI 16 x 16 Bit

Technical specifications	
Dimensions and weight	
Dimensions W x H x D (mm)	40 x 125 x 117
Weight	Approx. 280 g
Module-specific data	
Number of inputs Number of supply outputs	16 16
Cable length, shielded	Max. 800 m
Temperature range	

Technical specifications			
• Horizontal mounting position		0 °C to 60 °C	
• Vertical mounting position		0 °C to 40 °C	
Voltages, currents, potentials			
Rated load voltage L+ • Reverse polarity protection		24 V DC/0.36 A Yes	
Power supply of the 2-wire transducer • Short-circuit-proof		Yes Short-circuit current approx. 70 mA	
Electrical isolation			
• Between the channels and backplane bus		Yes	
• Between channels		Permissible common-mode voltage in the case of 4-wire transducer: 30 V DC 20 V AC	
• Between the channels and load voltage L+		Permissible potential difference for 4-wire transducer: 30 V DC 20 V AC	
• Between the backplane bus and load voltage L+		Yes	
Isolation, designed for basic isolation			
• Between the channels and backplane bus (U_{ISO})		75 V DC 60 V AC	
• Between the backplane bus and load voltage L+		75 V DC 60 V AC	
Isolation tested			
• Channels from backplane bus		500 V AC or 707 V DC, type test	
• Load voltage L+ from backplane bus		500 V AC or 707 V DC, type test	
• Between channels		No	
Current consumption			
• From backplane bus		Max. 100 mA	
• From load voltage L+ (supply current of all connected transducers)		Typ. 20 mA per connected transducer	
Power loss of the module		Approx. 3.0 W	
Analog value formation			
Measuring principle	SIGMA-DELTA		
Integration time/ interference frequency suppression (per channel)	60 Hz	50 Hz	10 Hz
• Configurable	Yes	Yes	Yes
• Integration time in ms	19.8	23.75	118.8
• Basic conversion time including integration time in ms (per channel)	23	27	122
• Basic execution time of the module (all channels enabled) in ms	416	480	1840

Technical specifications			
• Resolution in bits + sign (including overrange)	15 + sign	15 + sign	15 + sign
• Smoothing of the measured values	Yes, assignable in 4 levels:		
	Level: None Weak Medium Strong	Time constant: 1 x cycle time * 4 x cycle time * 32 x cycle time * 64 x cycle time *	
Noise suppression, error limits			
Interference voltage suppression for f = n x (f1 ± 1 %), (f1 = interference frequency)			
• Common-mode interference (only possible with 4-wire transducers (Ucm ≤ 20 V AC)	> 100 dB		
• Series-mode interference (peak value of disturbance < nominal value of input range)	> 40 dB		
Crosstalk attenuation between inputs (U_{ISO} < 60 V)	> 70 dB		
Operating error	± 0.15%		
Basic error	± 0.1%		
Temperature error (relative to input range)	± 0.001%/K		
Linearity error (relative to input range)	± 0.01 %		
Repeatability (in steady-state condition at 25 °C, relative to input range)	± 0.1%		
Status, interrupts, diagnostics			
Status display	No		
Group error display (SF LED)	Yes		
Diagnostic interrupt	Configurable		
Diagnostic functions	Configurable		
Characteristics of the transducer supply			
• Supply voltage for transducer with 22 mA transducer current (measurement resistance on module already taken into account)	≥ 16 V (when UN = 24 V)		
Sensor selection data			
Input ranges (rated values / input resistance)			
• Current	0 mA to 20 mA 4 mA to 20 mA ± 20 mA	250 Ω 250 Ω 250 Ω	
Permissible input current for current input (destruction limit)	40 mA continuous		
Burden for 2WMT	750 Ω		

* Cycle time = Basic conversion time per channel x Number of enabled channels

10.4.4.1 Parameters of the AI 16 x 16 Bit

Parameter assignment

The parameters are assigned using the parameter assignment dialog of HW Config

Parameters of the AI 16 x 16 Bit

The table below provides an overview of the assignable parameters and their default settings for the AI 16 x16 Bit.

The default settings apply when you have not assigned parameters in HW Config or you have not changed any parameters.

Table 10-17 Parameters of analog input module AI 16 x 16

Parameter	Value range	Default setting	Scope
Diagnostic interrupt enable	Yes / No	Yes	Module
Diagnostics • Group diagnostics analog • Wire break check	 Yes / No Yes / No	 Yes Yes	 Channel Channel
Smoothing	None Weak Medium Strong	None	Channel
Measurement type	Disabled 4WMT * current 2WMT * current	4WMT * current	Module
Measuring range	Disabled 0 mA to 20 mA ** 4 mA to 20 mA ± 20 mA **	4 mA to 20 mA	Channel
Interference frequency suppression / integration time	60 Hz (16.6 ms) 50 Hz (20 ms); 10 Hz (100 ms);	50 Hz (20 ms)	Channel

* 4WMT = 4-wire transducer; 2WMT = 2-wire transducer

** Can only be set for 4-wire transducer

Group diagnostics analog

The diagnostics parameter "Group diagnostics" enables the signaling of channel-specific errors to be switched off, with the exception of parameter assignment errors.

Smoothing

Through the smoothing of analog values, a stable analog signal is made available for further processing.

The smoothing of analog values is useful when measured values change rapidly.

The measured values are smoothed by means of digital filtering. Smoothing is achieved by the module calculating mean values from a defined number of converted (digitized) analog values.

You assign smoothing in 4 different levels (none, weak, medium, or strong). The level determines the number of analog signals used to form the mean value.

The stronger the smoothing is, the more stable the smoothed analog value will be and the longer it will take until the smoothed analog signal is available after a step response.

Wire break check

Wire break detection is not possible for the current ranges 0 mA to 20 mA and ± 20 mA.

For the current range from 4 mA to 20 mA, provided the wire break check is enabled, a current value below the input current of I ≤ 1.185 mA is interpreted as a wire break.

If the wire break check is enabled, there is no underflow detection.

10.4.4.2 Diagnostics of the AI 16 x 16 Bit

Introduction

Module faults and channel faults are displayed via the group error display (SF LED) and signaled via the diagnostic data records 0/1.

Diagnostic messages and possible corrective measures

The table below provides an overview of the diagnostics messages of analog input modules.

Table 10-18 Diagnostic messages of the AI 16 x 16 Bit and possible corrective measures

Diagnostic message	Configurable	Possible cause of error	Corrective measure
External auxiliary voltage missing	No	No supply voltage L+ of the module	Feed supply L+
Module parameters not assigned	No	Startup error	Reassign the module parameters
Incorrect parameters	No	One parameter, or the combination of parameters, is not plausible	Reassign the module parameters
Time monitoring tripped	No	Intermittently high electromagnetic interference	Eliminate the interference
EPROM error	No	Module defective	Replace the module
RAM error	No	Module defective	Replace the module
ADC/DAC error	No	Module defective	Replace the module

Diagnostic message	Configurable	Possible cause of error	Corrective measure
Parameter assignment error	No	One parameter, or the combination of parameters, is not plausible	Reassign the module parameters
		The wire jumper (terminals 10 and 11) does not match the parameter assignment of the measurement type.	Check wire jumper
Wire break	Yes	The connection of the transducer is interrupted	Check the wiring
		Resistance of sensor protection circuit too high	Use a different type of sensor or modify the wiring, for example, use cables with larger cross-section
		Channel not connected (open)	Disable the channel group ("Measurement type" parameter) or connect the channel
Low limit violation of measuring range / underrange	Yes (Group diagnostics)	Analog value below the underrange	Check the measuring range selection
		In the case of measuring range 4 mA to 20 mA, sensor may be connected with reverse polarity.	Check terminals
High limit violation of measuring range / underrange	Yes (Group diagnostics)	Analog value above the overrange	Assign a different measuring range

10.4.5 Analog input module AI 8 x TC/4 x RTD

Article numbers

Standard module: 6ES7 650-8AR60-0AA0

Module with conformal coating: 6ES7 650-8AR60-1AA0

Properties

The analog input module AI 8 x TC/4 x RTD is characterized by the following properties:

- 8 inputs in 4 channel groups
- Measured value resolution, can be set for each channel group (depending on the set interference frequency suppression)
  - 9 bits + sign (integration time 2.5 ms) ≙ 400 Hz
  - 12 bits + sign (integration time 16.67 / 20 ms) ≙ 60/50 Hz
  - 15 bits + sign (integration time 100 ms) ≙ 10 Hz

- Measurement type can be selected for each channel group:
  - Voltage
  - Resistance (in non-redundant use)
  - Temperature
- Any measuring range selection for each channel group
- Configurable diagnostics
- Configurable diagnostic interrupt
- Electrically isolated from the CPU
- Common mode < 60 V between the channels
- Configuration in Run (CiR) supported

Resolution

The resolution of the measured value is directly dependent on the integration time selected, i.e. the longer the integration time for an analog input channel is, the more accurate the resolution of the measured value will be.

Wiring and block diagrams of the AI 8 x TC/4 x RTD

Module view and wiring diagram of AI 8 x TC/4 x RTD.

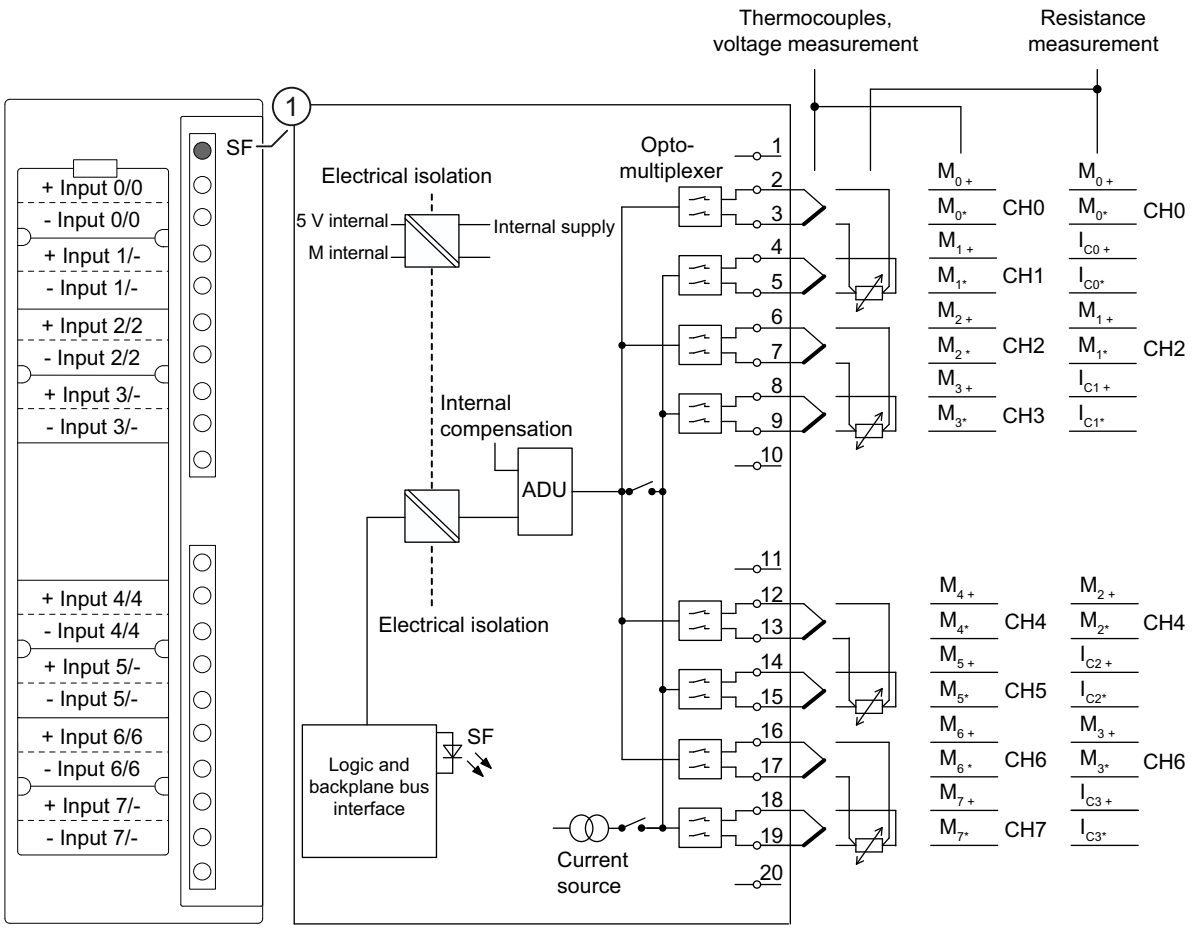

① Group error display - red (SF LED)

Figure 10-18 Module view and block diagram of the AI 8 x TC/4 x RTD

Notes on the module

No external supply voltage L+ (24 V) is necessary for the analog input module AI 8 x TC/4 x RTD.

If thermal resistors (e.g. Pt100) are used for external compensation, connect them to channels 6 and 7.

If a compensation box is used for external compensation, connect it to channel 7.

Notes on the front connector

If you use the front connector 6ES7392-1AJ20-0AA0, you attain a higher accuracy of temperature measurements with thermocouples in the "Internal compensation" measurement type. The accuracy of the internal reference junction temperature is ± 1.5 K when this front connector is used at ambient temperatures from 0 to 60 °C.

You can connect cables of 0.25 mm^2 to 1 mm^2.

The use of this front connector results in no restrictions regarding the approvals of the module.

Alternatively, you can use the front connector 6ES7392-1AJ00-0AA0, but without the increased accuracy.

Non-connected input channels

You must short-circuit activated and non-connected channels of the analog input module. This way you ensure optimum interference immunity for the analog input module.

To reduce the cycle time of the module, also deactivate the channels that are not connected via the parameter assignment dialog of HW-Config (measurement type: "deactivated")

Special feature of resistance measurement

Only one channel per channel group is required for the "resistance measurement" and "thermal resistance measurement". The "2nd" channel of the group is used for the current injection (I_C).

With the "1st" channel of the group is accessed , the measured value is obtained. The "2nd" channel of the group is preset with the overflow value "7FFFH".

In the diagnostics, the 1st channel provides the actual status (based on parameter assignment) in each case and the 2nd channel the status "error-free". A resistance measurement is not possible in redundant use.

Redundant use

In the case of the voltage measurement, the voltage sensor can be connected to both modules for each channel without additional external protection circuit.

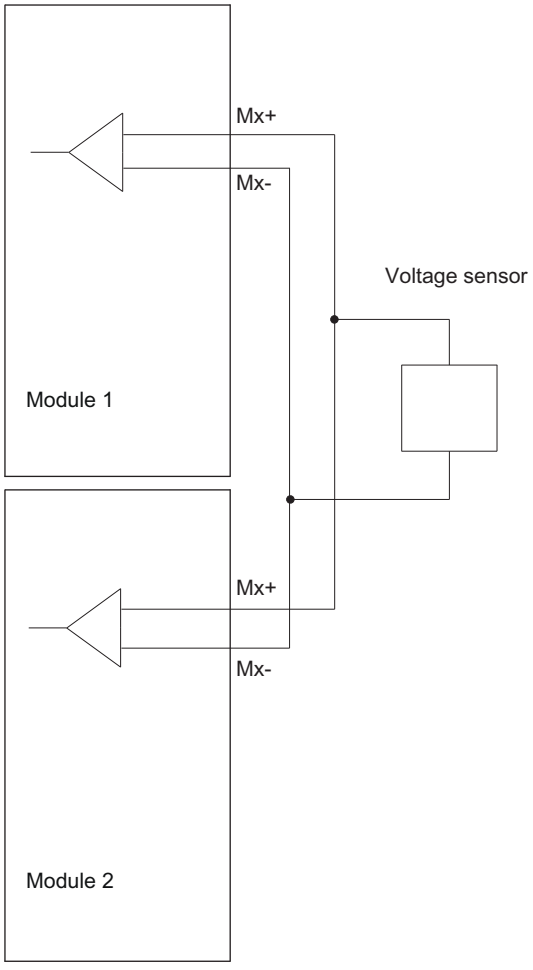

In the case of the thermocouple measurement, the sensors must be available redundantly. This is shown in the following figure for channel 4 as an example.

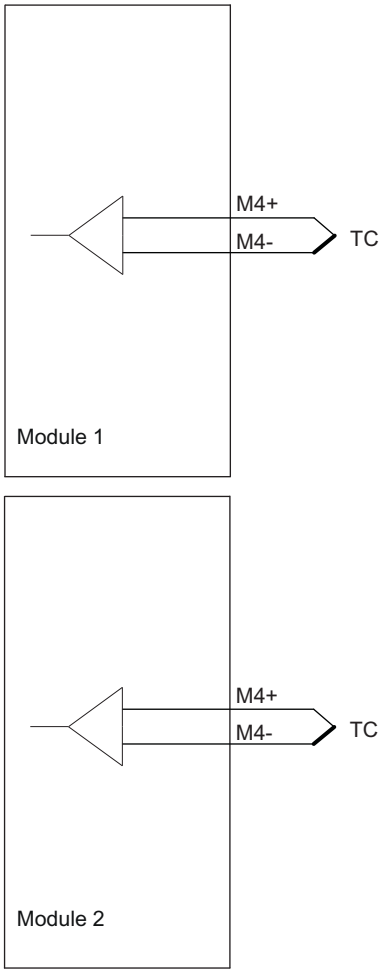
M4+
M4-
TC
Module 1
M4+
M4-
TC
Module 2

Note

Measurement of temperatures with thermocouples

Observe the following when measuring temperatures by means of thermocouples and assigned redundancy:

The value specified on the "Redundancy" tab under "Tolerance window" is always based on 2764.8 °C. Thus, for example, based on the input of "1" a tolerance of 27 degrees is checked. When "5" is entered, a tolerance of 138 degrees is checked.

Technical specifications of the AI 8 x TC/4 x RTD

Technical specifications				
Dimensions and weight				
Dimensions W x H x D (mm)	40 x 125 x 120			
Weight	Approx. 210 g			
Module-specific data				
Number of inputs • With resistance transducers	8 4			
Cable length, shielded	Max. 200 m Max. 50 m for voltage ranges ≤ 80 mV and thermocouples			
Voltages, currents, potentials				
Bus power supply	5 V DC			
Current consumption from backplane bus	Max. 120 mA			
Power loss of the module	Typ. 0.6 W			
Electrical isolation				
• Between the channels and backplane bus	Yes			
• Between channels	No Permitted common-mode voltage: 75 V DC or 60 V AC			
Isolation, designed for basic isolation				
• Between the channels and backplane bus (U_{ISO})	75 V DC or 60 V AC			
Isolation tested with	500 V AC or 707 V DC, type test			
Analog value formation				
Measuring principle	SIGMA-DELTA			
Integration/conversion time/resolution (per channel) • Configurable • Integration time in ms	 Yes 2.5	 Yes 16.67	 Yes 20	 Yes 100
• Basic conversion time = • 3 x integration time + • Transient recovery time of optomultiplexer in ms	7.5 + 2.5	50 + 2.5	60 + 2.5	300 + 2.5
• Additional conversion time for wire break detection in ms	2.5	2.5	2.5	2.5

Technical specifications				
• Resolution in bits (including overrange)	9 + sign	12 + sign	12 + sign	15 + sign
• Noise suppression at interference frequency f1 in Hz	400	60	50	10
Noise suppression, error limits				
Interference voltage suppression for f = n x (f1 ± 1 %), (f1 = interference frequency)				
• Common-mode interference suppression (U_{ISO} < 60 V)	> 130 dB			
• Series-mode interference suppression (interference peak value < rated value of input range)	> 40 dB			
Crosstalk attenuation between inputs (UISO < 60 V)	> 70 dB			
Operational limit (in total temperature range, relative to input range)				
• ± 25 mV • ± 50 mV • ± 80 mV • ± 250 mV/± 500 mV/± 1 V	± 0.09% ± 0.06% ± 0.05% ± 0.04%			
Basic error limit (Operational limit at 25°C, relative to input range)				
• ± 25 mV • ± 50 mV • ± 80 mV • ± 250 mV/± 500 mV/± 1 V	± 0.018 % ± 0.014 % ± 0.011 % ± 0.008 %			
Temperature error (relative to input range)				
• ± 25 mV • ± 50 mV • ± 80 mV • ± 250 mV/± 500 mV/± 1 V	± 0.0019 %/K ± 0.0013 %/K ± 0.0011 %/K ± 0.0010 %/K			
Linearity error (relative to input range)	± 0.003 %			
Repeatability (in steady-state condition at 25 °C, relative to input range)	± 0.003 %			
The accuracy of temperature measurement with *external compensation with thermal resistors* is derived from:	• Error for the analog input of the type of thermocouple used • Accuracy[1] of the type of thermal resistor used for compensation • Error[1] of the compensation input			
The accuracy of temperature measurement with *external compensation with compensation box* is derived from:	• Error for the analog input of the type of thermocouple used • Accuracy[1] of the compensation box • Error[1] of the compensation input			
The accuracy of temperature measurement with *compensation of the external reference junction maintained at 0 °C / 50 °C* is derived from:	• Error for the analog input of the type of thermocouple used • Accuracy[1] of the reference junction temperature			

Technical specifications	
The accuracy of temperature measurement with *internal compensation (terminal temperature)* results from:	• Error for the analog input of the type of thermocouple used • Accuracy [1] of the internal reference junction temperature ± 2.5 K (in the range 0 to 60 °C

[1] Due to the increasing slope of the thermocouple characteristic curve at higher temperatures, the error of the compensation element has less influence than at temperatures in the vicinity of the compensation temperature. Exception: Thermocouple types J and E (relatively linear curve). In the case of thermocouple type B, its negligible slope in the range from approximately 0°C to 40°C means that a missing compensation of the reference junction temperature has only a slight effect. When compensation is missing and "Compensation at 0°C" measurement type is set, the discrepancy in the case of thermocouple type B for measurement temperatures between:

700°C and 1820°C is < 0.5°C
500 °C and 700 °C is < 0.7°C.
"Internal compensation" should be set if the reference junction temperature closely corresponds to the module temperature. This reduces the error for the temperature range from 500 °C to 1820 °C to < 0.5 °C.

Error limits of analog inputs for thermocouples

(at 25 °C ambient temperature and 100 ms integration time)

Type	Temperature range	Basic error[1]	Temperature error[2] [°C/K]
T	-150 °C...+400 °C -230 °C... -150°C	± 0.2K ± 1K	± 0.006
U	-50 °C....+400 °C 200 °C....-50 °C	± 0.2K ± 1K	± 0.006
E	-100 °C....+1000 °C -200 °C....-100 °C	± 0.2K ± 1K	± 0.0075
J	-150 °C....+1200 °C -210 °C ... -150 °C	± 0.2K ± 0.5K	± 0.02
L	-50 °C....+1200 °C -200 °C....-50 °C	± 0.2K ± 1K	± 0.02
K	-100 °C....+1372 °C 220 °C....-100 °C	± 0.2K ± 1K	± 0.018
N	-50 °C....+1300 °C 150 °C....-50 °C	± 0.2K ± 1K	± 0.025
R	+200 °C....+1769 °C -50 °C....+200 °C	± 0.3K ± 1K	± 0.025
S	+100 °C....+1769 °C -50 °C....+100 °C	± 0.3K ± 1K	± 0.025
B	+700 °C....+1820 °C +500 °C....+700 °C +200 °C....+500 °C	± 0.3K ± 0.5K ± 3K	± 0.04

Error limits of analog inputs for thermal resistors

(at 25 °C ambient temperature and 100 ms integration time)

Type	Temperature range	Basic error[1]	Temperature error[2] [°C/K]

Error limits of analog inputs for thermal resistors			
Pt100 climatic	-200 °C....+325 °C	± 0.05K	± 0.006
Pt200 climatic	-200 °C....+325 °C	± 0.05K	± 0.006
Ni 100 climatic	-60 °C....+250 °C	± 0.05K	± 0.003
Pt 100 standard	-200° C....+850 °C	± 0.2K	± 0.01
Pt200 standard	-200 °C....+850 °C	± 0.2K	± 0.01
Ni 100 standard	-60 °C....+250 °C	± 0.1K	± 0.003

Error limits of analog inputs for resistance sensors			
(at 25 °C ambient temperature and 100 ms integration time)			
Type	Resistance sensor	Basic error [3]	Temperature error[2] [°C/K]
150 Ω	0.000 Ω .176.383 Ω	± 0.006%	± 0.001
300 Ω	0.000 Ω...352.767 Ω	± 0.006%	± 0.001
600 Ω	0.000 Ω...705.534 Ω	± 0.006%	± 0.001
[1] The basic error includes the linearization error of the voltage temperature conversion and the basic error of the analog/digital conversion at T_u = 25°C. [2] The total temperature error = temperature error x max. ambient temperature change DT_u as a temperature difference with respect to 25°C. [3] The basic error includes the errors in % of the measuring range of the analog/digital conversion at T_a = 25 °C.			

The operating error for the use of **thermocouples / thermal resistors** consists of:

- Basic error of the analog input at T_u = 25°C
- Total temperature error
- Errors that occur due to the compensation of the reference junction temperature
- Errors of the thermocouple / thermal resistor used

The operating error for the use of **thermal resistors** consists of:

- Basic error of the analog input at T_u = 25°C
- Total temperature error
- Error of the sensor used

Status, interrupts, diagnostics	
Status display	No
Group error display (SF LED)	Yes
Diagnostic interrupts	Configurable
Diagnostic functions	Configurable

Sensor selection data		
Input ranges (rated values) / input resistance • Voltage	± 25 mV ± 50 mV ± 80 mV ± 250 mV ± 500 mV ± 1 V	/10 MΩ /10 MΩ /10 MΩ /10 MΩ /10 MΩ /10 MΩ
• Resistance	150 Ω 300 Ω 600 Ω	/10 MΩ /10 MΩ /10 MΩ
• Thermocouples	Type: T, U, E, J, L, K, N, R, S, B	/10 MΩ
• Resistance thermometer	Pt100, Pt200, Ni100	/10 MΩ
Measuring current for thermal resistors and wire-break check	Approx. 0.5 mA	
Permissible input voltage for voltage input (destruction limit)	Max. 35 V permanent; 75 V for max. 1 s (pulse duty factor 1:10)	
Connecting the signal transmitter		
• For voltage measurement	Supported	
• For resistance measurement with 4-wire connection, with 3-wire connection[1] with 2-wire connection[1]	Supported	
Characteristics linearization	Configurable	
• For thermocouples	• Type : T, U, E, J, L, K, N, R, S, B	
• For thermal resistors	• Pt100, Pt200, Ni 100 (standard and climatic range)	
Temperature compensation	Configurable	
• Internal temperature compensation	Supported	
• External temperature compensation with compensation box	Supported	
• External temperature compensation with thermal resistors (e.g. Pt100)	Supported	
• Compensation for 0 °C reference junction temperature	Supported	
• Compensation for 50° C reference junction temperature	Supported	
[1] Without cable resistance correction		

10.4.5.1 Parameters of the AI 8 x TC/4 x RTD

Parameter assignment

The parameters are assigned using the parameter assignment dialog of HW Config

Parameters of the AI 8 x TC/4 x RTD

The table below provides an overview of the assignable parameters and their default settings for the AI 8 x TC/4 x RTD.

The default settings apply when you have not assigned parameters in HW Config or you have not changed any parameters.

Table 10-19 Parameters of the AI 8 x TC/4 x RTD

Parameter	Value range	Default setting	Scope
Diagnostic interrupt enable	Yes / No	Yes	Module
Diagnostics • Group diagnostics • Wire break check	 Yes / No Yes / No	 Yes Yes	 Channel Channel
Measurement type	Disabled U: Voltage R-4L: Resistance (4-wire connection) RT: Resistance (thermal resistance) TC-L00C: Thermocouple (Ref.Temp 0^0C) TC-L50C: Thermocouple (Ref.Temp 50^0C) TC-IL: Thermocouple (comp. internal) TC-EL: Thermocouple (comp. external)	U	Channel group
Measuring range	Corresponds to the set measurement type see below	+/- 1 V	Channel group
Interference frequency suppression / integration time	400 Hz (2.5 ms) 60 Hz (16.6 ms) 50 Hz (20 ms) 10 Hz (100 ms)	50 Hz (20 ms)	Channel group

Channel groups

In the analog input module AI 8 x TC/4 x RTD, 2 channels are combined to form one channel group. Parameters can always only be assigned to one channel group, i.e. parameters that are assigned for a channel group always apply to both channels of this channel group.

Table 10-20 Assignment of analog input channels of the AI 8 x TC/4 x RTD to channel groups

Channel	Assigned channel group
Channel 0	Channel group 0
Channel 1	
Channel 2	Channel group 1
Channel 3	
Channel 4	Channel group 2
Channel 5	
Channel 6	Channel group 3
Channel 7	

Group diagnostics

The diagnostics parameter "Group diagnostics" enables the signaling of channel-specific errors to be switched off, with the exception of parameter assignment errors.

Wire break check

The analog input module AI 8 x TC/4 x RTD carries out a wire-break check for all ranges if it is enabled via parameter assignment. In the case of the thermal resistance measurement (RT), all 4 connection wires are monitored are monitored for wire break.

Possible measuring ranges

The possible measuring ranges as a function of the measurement type setting can be found in the following tables.

Measuring ranges for voltage measurements

Selected measurement type	Explanation	Measuring range
U	Voltage	± 25 mV ± 50 mV ± 80 mV ± 250 mV ± 500 mV ± 1 V

Measuring ranges for resistance measurement

Selected measurement type	Explanation	Measuring range
R-4L	Resistance 4-wire connection	150 ohms 300 ohms 600 ohms

Connectable thermocouples and their measuring ranges

The linearization of the thermocouple characteristic curves occurs for thermocouples in accordance with IEC 584.

For thermal resistance measurements, linearization of the characteristic curves is based on **DIN 43760** and **IEC 751**.

Table 10-21 Connectable thermocouples and thermal resistors

Selected measurement type	Explanation	Measuring range
TC-L00C	Linearization and compensation at 0 °C	Type T [Cu-CuNi] Type U [Cu-CuNi] Type E [NiCr-CuNi] Type J [Fe-CuNi] Type L [Fe-CuNi] Type K [NiCr-Ni] Type N [NiCr-SiNiSi] Type R [Pt13Rh-Pt] Type S [Pt10Rh-Pt] Type B [Pt30Rh-Pt6Rh]
TC-L50C	Linearization and compensation at 50 °C	
TC-IL	Linearization and compensation internal comparison [1]	
TC-EL	Linearization and compensation external comparison [2]	
RT	Thermal resistance + Linearization, 4-wire connection (temperature measurement)	Pt100, Pt200, Ni 100 standard range Pt100, Pt200, Ni 100 climatic range

[1] In the case of internal compensation in the module, all 8 channels are available for temperature measurements thus with different types of thermocouples.

- If the input is short-circuited, the terminal temperature of the module is supplied.
  This does not apply to thermocouple type B, which is not suitable for measurements in the ambient temperature range.

[2] This type of measurement supports the following compensations:

- Use of a compensation box
  The compensation box must be compatible with the type of thermocouple connected. Connection to channel 7.
- Use of thermal resistors in climatic range (e.g. Pt100) for compensation.
  The absolute terminal temperature is determined in the climatic range with a thermal resistor (e.g. Pt 100) for the compensation. In this case, the thermocouples to be compensated can be of different types.
  Connection to channels 6 and 7. This channel group must be configured in the measurement type as "Thermal resistance" and in the measuring range as "Pt 100 climatic range"

10.4.5.2 Diagnostics of the AI 8 x TC/4 x RTD

Introduction

Module faults and channel faults are displayed via the group error display (SF LED) and signaled via the diagnostic data records 0/1.

Diagnostic messages and possible corrective measures

Table 10-22 Diagnostic messages of AI 8 x TC/4 x RTD and possible remedial measures

Diagnostic message	Configurable	Possible cause of error	Corrective measure
Module parameters not assigned	No	Startup error	Reassign the module parameters
Incorrect parameters	No	One parameter, or the combination of parameters, is not plausible	Reassign the module parameters
Time monitoring tripped	No	Intermittently high electromagnetic interference	Eliminate the interference
EPROM error	No	Module defective	Replace the module
RAM error	No	Module defective	Replace the module
Parameter assignment error	No	One parameter, or the combination of parameters, is not plausible	Reassign the module parameters
Wire break	Yes	The connection of the transducer is interrupted	Check the wiring
		Resistance of sensor protection circuit too high	Use a different type of sensor or modify the wiring, for example, use cables with larger cross-section
		Channel not connected (open)	Disable the channel group ("Measurement type" parameter) or connect the channel
Low limit violation of measuring range / underrange	Yes (group diagnostics)	Analog value below the underrange	Check the measuring range selection
		In the case of measuring range 4 mA to 20 mA, sensor may be connected with reverse polarity.	Check terminals
High limit violation of measuring range / underrange	Yes (group diagnostics)	Analog value above the overrange	Assign a different measuring range

10.5 Analog output modules

Overview of properties

The table below presents the ET 200PA SMART analog output module based on its most important properties.

Properties	Module	
	AO 8 x 12 Bit	AO 8 x 12 Bit HART
	6ES7 650-8BK60-xAA0	6ES7 650-8BT60-xAA0

Number of outputs	8 output channels	8 output channels
Resolution	12 bits	15 bits + sign
Output type	Channel by channel: • Current • Voltage	Channel by channel: • Current
Configurable diagnostics	Yes	Yes
Diagnostic interrupt	Can be set	Can be set
Substitute value output	No	Yes
Potential relationships	Floating between: • Backplane bus interface • Load voltage	Floating between: • Backplane bus interface • Load voltage

Basics

For basics regarding the basic procedure for connecting loads/actuators to analog inputs (current outputs) as well as basics of the analog value processing and specifications regarding the analog value formats used in each case, refer to:

"Automation System S7-300, Module Data" http://support.automation.siemens.com/WW/view/en/8859629)".

Cables for analog signals

Always use shielded twisted-pair cables for the analog signals. This reduces the noise interference. You should ground the shield of the analog cables at both ends.

If potential differences exist between the cable ends, an equipotential bonding current may flow via the shield and disturb the analog signals. In this case, you must provide for a low-resistance equipotential bonding, and, if necessary, ground the shield only at one end of the cable.

Observe the generally applicable information on connecting loads/actuators in the SIMATIC S7-300 Automation System Module Data manual on the Internet (http://support.automation.siemens.com/WW/view/en/8859629).

10.5.1 Analog output module AO 8 x 12 Bit

Article numbers

Standard module: 6ES7 650-8BK60-0AA0

Module with conformal coating: 6ES7 650-8BK60-1AA0

Properties

- 8 outputs in one group
- The output can be configured for each channel:

Possible selection	As of product version	Ranges
Current output	Product version 1	• 0 mA to 20 mA • 4 mA to 20 mA • +/-20 mA
Voltage output	Product version 3	• 1 V to 5 V • 0 V to 10 V • +/-10 V

- Resolution 12 bits
- HART-compliant (for current output)
- Configurable diagnostics
- Configurable diagnostic interrupt
- Floating relative to backplane bus interface and load voltage
- Configuration in Run (CiR) supported

Note

When the rated load voltage (L+) is switched off and on, the outputs can output incorrect voltage/current values for approximately 500 ms.

As of product version 3: Wiring: 2-wire and 4-wire connection for voltage output

The following picture shows

- The 2-wire connection without compensation of the line resistances and
- The 4-wire connection with compensation of the line resistances.

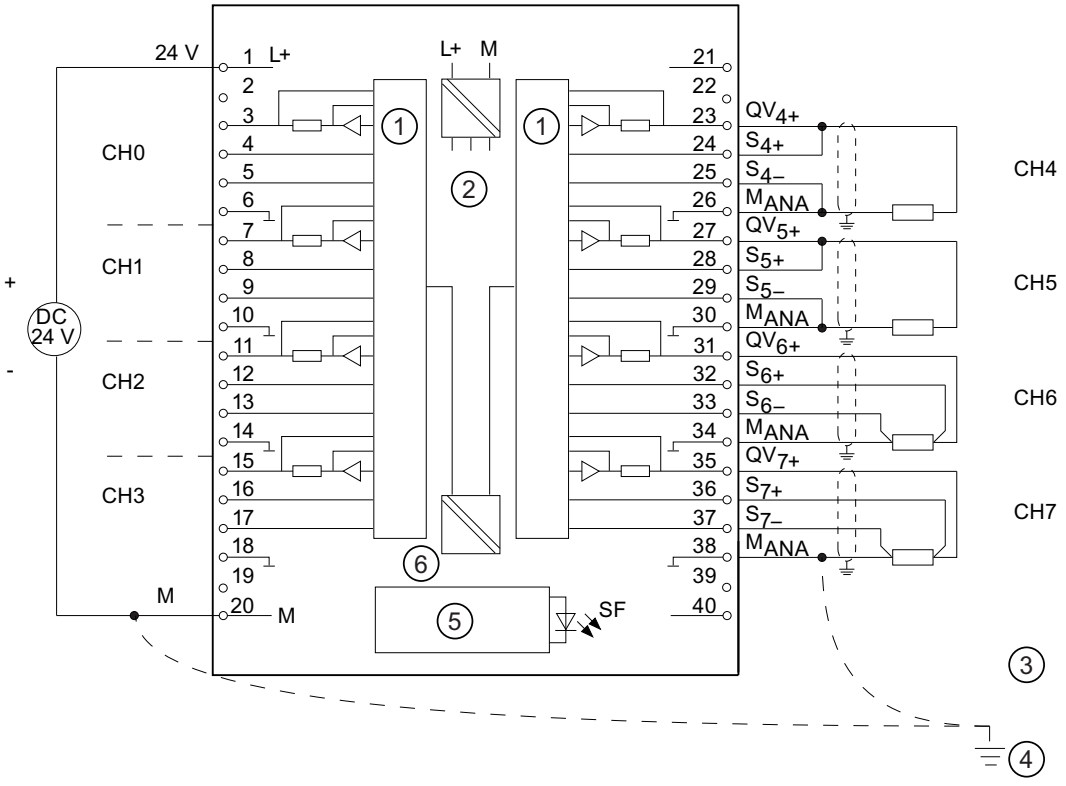

① DAC
② Internal supply
③ Equipotential bonding
④ Functional ground
⑤ Backplane bus interface
⑥ Electrical isolation

Figure 10-19 Wiring and block diagram

Connection and current output block diagram

The wiring examples apply to all channels (channels 0 to 7).

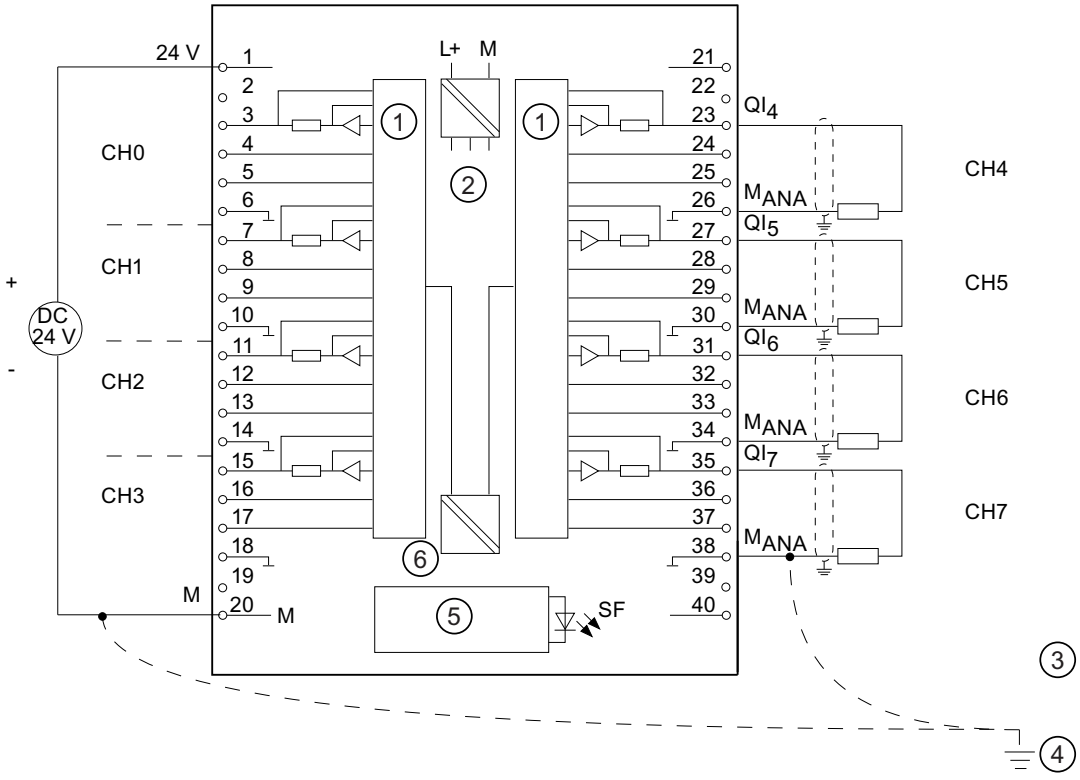

① DAC
② Internal supply
③ Equipotential bonding
④ Functional ground
⑤ Backplane bus interface
⑥ Electrical isolation

Figure 10-20 Wiring and block diagram

Non-connected channels

So that non-connected output channels of the AO 8 x 12 Bit are de-energized, you must set the "Output type" parameter as "disabled". Disabled channels can remain unconnected.

Connection of loads and actuators

You must connect loads to CHx + and the reference point of the analog circuit CHx – of a current output.

Redundant use

In redundant mode, the AO8x12Bit modules are present in duplicate and are configured and operated redundantly.

The actuator is wired to both redundantly configured modules.

A protective diode must be interconnected at each output. Suitable diodes include diode types from the 1N4003 to 1N4007 series or any other diode with U_r >=200 V and I_F >= 1 A

The analog value to be output is divided in half in the "RedLib" redundancy blocks, and the two modules output half of the setpoint. If one of the modules fails, the failure is detected and the remaining module outputs the full value.

Note

With this procedure, the output value drops briefly to half, and after the reaction of the "RedLib" the current is raised again to the correct value.

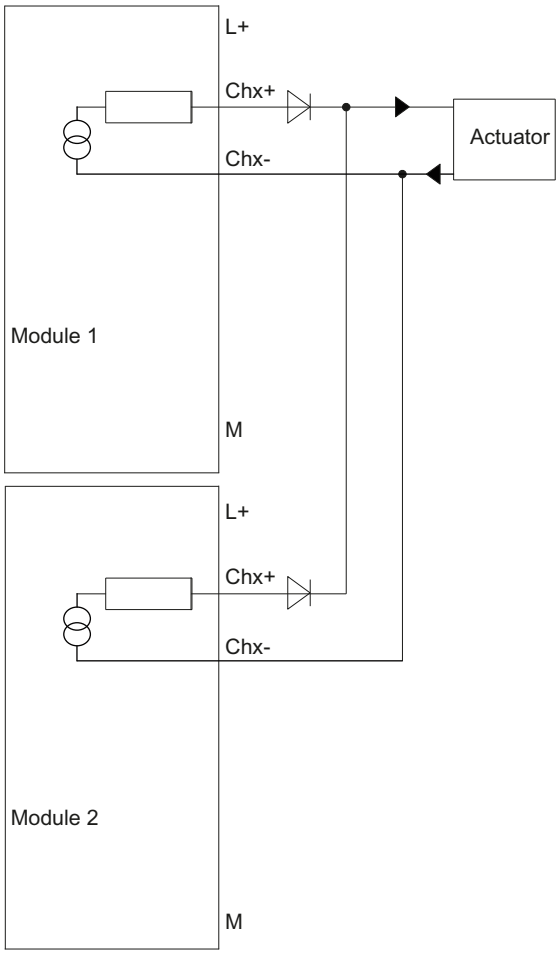

Technical specifications of the AO 8 x 12 Bit

Technical specifications	
Dimensions and weight	
Dimensions W x H x D (mm)	40 x 125 x 117

Technical specifications	
Weight	Approx. 272 g
Module-specific data	
Configuration in RUN possible	Yes
Behavior of the non-assigned outputs	Output the last valid output value before the parameter assignment
Supports isochronous mode	No
Number of outputs	8
Cable length • Shielded	 Max. 200 m
Voltages, currents, potentials	
Rated load voltage L+ • Reverse polarity protection	24 V DC Yes
• Electrical isolation • Between channels and backplane bus • Between channels and electronics power supply • Between channels • Between channels and load voltage L+	 Yes Yes No Yes
Permissible potential difference • Between S and M_{ANA} (U_{CM})	 3 V DC
Isolation tested with	500 V DC
Current consumption • From backplane bus • From supply voltage L+	 Max. 100 mA Max. 340 mA
Power loss of the module	Typ. 6.0 W
Analog value formation	
Resolution, including sign • ± 10 V; ± 20 mA; 4 mA to 20 mA; 1 V to 5 V • 0 V to 10 V; 0 mA to 20 mA; • Conversion time (per channel)	 11 bits + sign 12 bits max. 0.8 ms
Transient recovery time • With resistive load • With capacitive load • With inductive load	 0.2 ms 3.3 ms 0.5 ms (1 mH) 3.3 ms (10 mH)
Noise suppression, error limits	
• Crosstalk between outputs	> 40 dB
Operational limit (across entire temperature range, relative to measurement range end value of the selected output range)	
• Voltage output (as of product version 3) • Current output	± 0.5% ± 0.6%
Basic error limit (operational limit at 25 °C, relative to the measurement range end value of the selected output range)	

Technical specifications	
• Output voltage • Output current • Temperature error (relative to output range) • Linearity error (relative to output range) • Repeat accuracy (in transient state at 25 °C, relative to output range) • Output ripple; bandwidth 0 kHz to 50 kHz (relative to output range)	± 0.4% ± 0.5% ± 0.002 %/K + 0.05% ± 0.05% ± 0.05%
Status, interrupts, diagnostics	
Interrupts • Diagnostic interrupt	 Configurable
Diagnostic functions • Group error display • Diagnostic information can be read	Configurable Red LED (SF) Supported
Actuator selection data	
Output ranges (rated values)	
• Voltage (as of product version 3)	± 10 V 0 V to 10 V 1 V to 5 V
• Current	± 20 mA 0 mA to 20 mA 4 mA to 20 mA
Load resistance (in the nominal range of the output)	
• for voltage outputs (as of product version 3) – Capacitive load	min. 1 kΩ max. 1 µF
• At current outputs – At U_{CM} < 1 V – With inductive load	Max. 500 Ω Max. 600 Ω max. 10 mH
Voltage output • Short-circuit protection • Short-circuit current	 Yes max. 25 mA
Current output • Noload voltage	 Max. 18 V
• Destruction limit against external voltages/currents • Voltage at outputs to M_{ANA} • Current	Max. 18 V continuous; 75 V for max. 1 s (duty factor 1:20) Max. 50 mA DC
Connection of the actuators • for voltage output 4-wire connection • for current output 2-wire connection	Using a 40-pin front connector (as of FD 3) possible

10.5.1.1 Parameters of the AI 8 x 12 Bit

Parameter assignment

The parameters are assigned using the parameter assignment dialog of HW Config

Parameters of the AO 8 x 12 Bit

You can find an overview of the assignable parameters and their default settings for the AO 8 x 12 Bit in the following table.

The default settings apply when you have not assigned parameters in HW Config or you have not changed any parameters.

Table 10-23 Parameters of the AO 8 x 12 Bit

Parameter	Range of values		Default	Scope
Diagnostic interrupt enable	Yes / No		Yes	Module
Diagnostics • Group diagnostics	Yes / No		Yes	Channel
Output type	Disabled I current U voltage (as of product version 3)		U	Channel
Output range	Voltage	from 1 V to 5 V from 0 V to 10 V ± 10 V	± 10 V (voltage output type)	Channel
	Current	from 0 mA to 20 mA from 4 mA to 20 mA ± 20 mA		
Reaction to CPU STOP	ASS Outputs have no current or voltage LWH Keep last value		ASS	Channel

The diagnostics can be activated on a channel granular basis (parameters: group diagnostics). When group diagnostics is activated, the module performs a wire break check for current output and a short-circuit test for voltage output.

Group diagnostics

The diagnostics parameter "Group diagnostics" enables the signaling of channel-specific errors to be switched off, with the exception of parameter assignment errors.

Wire-break check (only for current outputs)

Use the "Group diagnostics" parameter to activate the wire break check of the current outputs. In the output ranges 0 mA to 20 mA and ± 20 mA, no "safe" wire break check can be performed for output values lower than ± 200 µA.

Short circuit test (only for voltage outputs; possible as of product version 3)

AO 8 x 12 Bit only performs a short circuit test for voltage outputs.

10.5.1.2 Diagnostics of the AO 8 x 12 Bit

Introduction

Module faults and channel faults are displayed via the group error display (SF LED) and signaled via the diagnostic data records 0/1.

Diagnostic messages and possible corrective measures

Table 10-24 Diagnostics messages of analog output module AO 8 x 12 Bit and possible remedial measures

Diagnostic message	Configurable	Possible cause of error	Corrective measure
No external auxiliary voltage	No	No supply voltage L+ of the module	Feed supply L+
Module parameters not assigned	No	Startup error	Reassign the module parameters
Incorrect parameters	No	One parameter, or the combination of parameters, is not plausible	Reassign the module parameters
Time monitoring tripped	No	Intermittently high electromagnetic interference	Eliminate the interference
EPROM error	No	Module defective	Replace the module
RAM error	No	Module defective	Replace the module
ADC/DAC error	No	Module defective	Replace the module
Parameter assignment error	No	One parameter, or the combination of parameters, is not plausible	Reassign the module parameters
Wire break	Yes (group diagnostics)	Resistance of actuator too high	Use a different type of actuator, or modify the wiring, for example, use cables with larger cross-section
		Interruption of the cable between the module and the actuator	Establish the cable connection
		Channel not used (open)	Disable the channel group ("Output type" parameter)
Short-circuit (possible as of product version 3)	Yes (channel-specific)	Overload of the output	Eliminate overload
		Short-circuit to output Q_V to M_{ANA}	Eliminate short-circuit

10.5.2 Analog output module AO 8 x 16 Bit HART

Article numbers

Standard module: 6ES7 650-8BT60-0AA0

Module with conformal coating: 6ES7 650-8BT60-1AA0

Properties

- 8 outputs in a group (current)
- Resolution 15 bits + sign
- HART communication, parameters can be assigned channel-selective
- Parameterizable output range per channel
  - 0 ... 20 mA (without HART use)
  - 4 ... 20 mA (with/without HART use)
- Configurable diagnostics
- Configurable diagnostic interrupt
- Parameterizable substitute value behavior
- Electrical isolation
  - Channels isolated in relation to IM650 and load voltage L+
- Configuration in Run (CiR) supported
- Configuration of HART variables
- Discrepancy analysis when used in the S7-400H automation system

For basic information on the connection and operation of HART field devices and the corresponding use of HART variables, see "HART" section.

Wiring and block diagram

The wiring examples apply to all channels (channels 0 to 7).

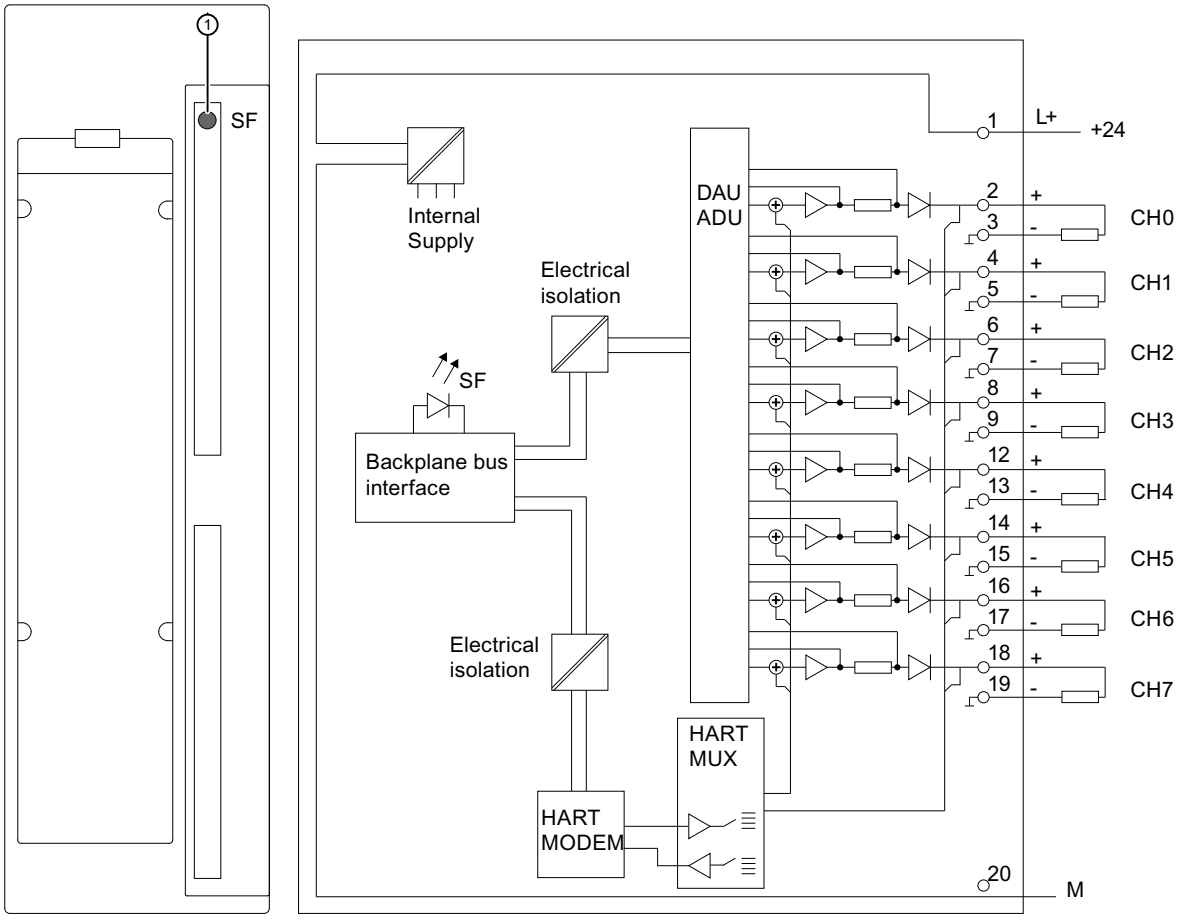

① Group fault display –red (SF LED)

Figure 10-21 Connection and circuit diagram of the AO 8 x 16 Bit HART

Non-connected channels

To ensure that unconnected output channels of the AO 8 x 16 Bit HART are de-energized, you must set the "Output type" parameter to "deactivated". Disabled channels can remain unconnected.

Cables for analog signals

The figure below does not show the necessary connecting lines that result from the potential connection of the analog output module.

Therefore, please note the generally applicable information on the connection of loads/ actuators in the Automation System SIMATIC S7-300 Module data manual on the Internet (http://support.automation.SIEMENS.com/WW/view/en/8859629).

Abbreviations used in the figure below.

In the figure below the abbreviations used have the following meaning:

L+ Power supply connection 24 V DC
M Ground connection
CH_x+ Positive analog connection (output current)
CH_x- Negative analog connection (reference potential)
M_{ANA} Reference potential of the analog circuit
R_L Load resistance
$M_{external}$ reference potential of the load circuit
$M_{Internal}$ reference potential of the control circuit (M-connection of the IM650) and of the backplane bus
U_{ISO} Electric potential difference between MANA and M-connection of the IM650

Connection of loads and actuators

You must connect loads to CHx + and the reference point of the analog circuit CHx – of a current output.

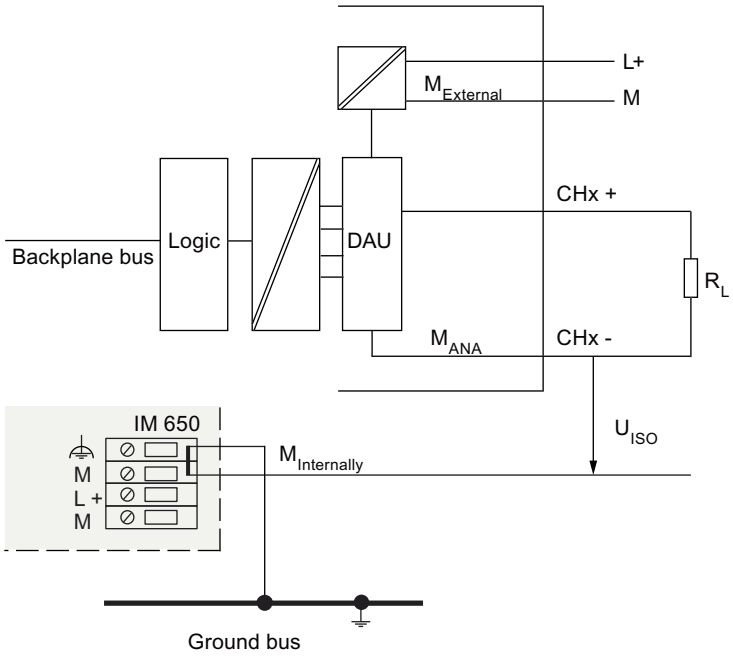

Figure 10-22 connection of loads to a current output on the AO 8 x 16 Bit HART

Redundant use

In redundant operation the modules AO 8 x 16 Bit HART are available twice and are configured and operated redundantly.

- In redundant operation, no other HART masters, such as a hand-held device, may be connected.
- The actuator is wired to both redundantly configured modules.
- The analog value to be output is divided in half in the "RedLib" redundancy blocks, and the two modules output half of the setpoint. If one of the modules fails, the failure is detected and the remaining module outputs the full value.

Note

With this procedure, the output value drops briefly to half, and after the reaction of the "RedLib" the current is raised again to the correct value.

Redundant connection of an actuator

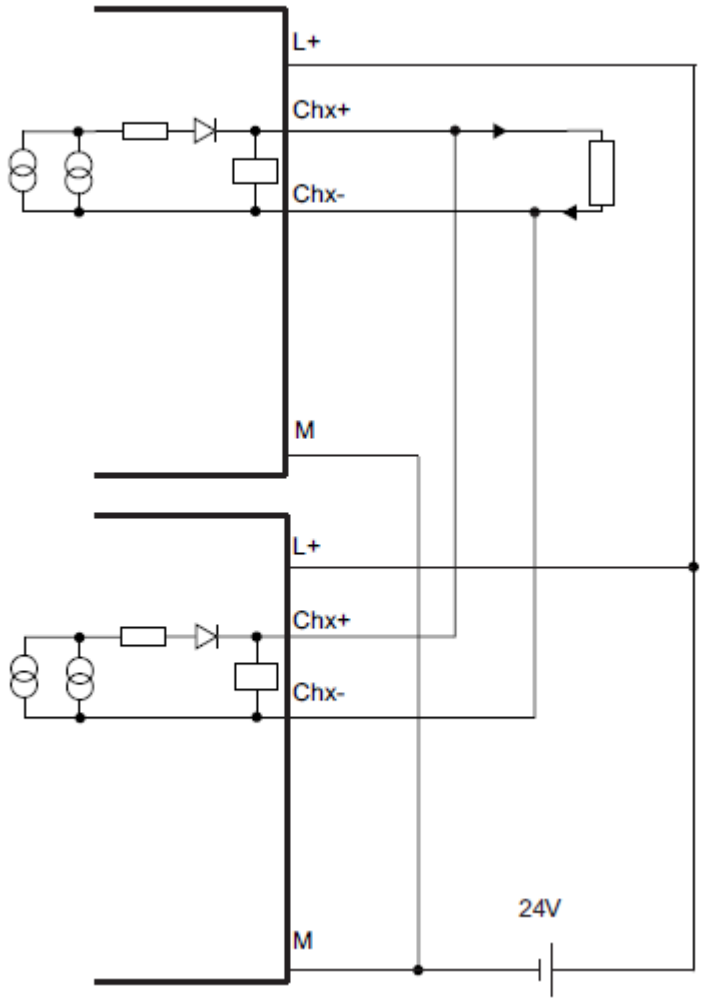

Figure 10-23 Connection example of redundant operation of the AO 8 x 16 Bit HART

Technical specifications AO 8 x 16 Bit HART

Technical specifications	
Dimensions and weight	
Dimensions W x H x D (mm)	40 x 125 x 117
Weight	Approx. 205 g
Module-specific data	
Number of inputs Number of supply outputs	8 8
Cable length, shielded	max. 800 m
Temperature range	

Technical specifications			
• Horizontal mounting position	0 °C to 60 °C		
• Vertical mounting position	0 °C to 40 °C		
Voltages, currents, potentials			
Rated load voltage L+ • Reverse polarity protection	24 V DC Yes		
Power supply of the 2-wire transducer • Short-circuit-proof	Yes Short-circuit current approx. 40 to 60 mA		
Electrical isolation			
• Between the channels and backplane bus	Yes		
• Between channels	Permissible common-mode voltage in the case of 4-wire transducer: 75 V DC 60 V AC		
• Between the channels and load voltage L+	For 2-wire transducer: No For 4-wire transducer: Yes		
• Between the backplane bus and load voltage L+	Yes		
Isolation, designed for basic isolation			
• Between the channels and backplane bus (U_{ISO})	75 V DC 60 V AC		
• Between channels and load voltage L+	For 4-wire transducer: 75 V DC 60 V AC		
• Between the backplane bus and load voltage L+	75 V DC 60 V AC		
Isolation tested			
• Channels from backplane bus and load voltage L+	500 V AC or 707 V DC, type test		
• Backplane bus from load voltage L+	500 V AC or 707 V DC, type test		
• Between channels	No		
Current consumption			
• From backplane bus	max. 120 mA		
• From load voltage L+ (supply current of all connected transducers)	Typ. 20 mA per transducer		
Power loss of the module	approx. 1.5 W		
Analog value formation			
Measuring principle	SIGMA-DELTA		
integration time/ interference frequency suppression (per channel)	60 Hz	50 Hz	10 Hz
• Configurable	Yes	Yes	Yes
• Integration time in ms	16.6	20	100
• Basic conversion time including integration time in ms (per channel)	55	65	305
• Basic execution time of the module (all channels enabled) in ms	440	520	2440

Technical specifications			
• Resolution in bits + sign (including overrange)	15 + sign	15 + sign	15 + sign
• Smoothing of the measured values	Yes, assignable in 4 levels:		
	Level: None weak medium Strong	Time constant: 1 x cycle time * 4 x cycle time * 32 x cycle time * 64 x cycle time *	
Noise suppression, error limits			
Interference voltage suppression for f = n x (f1 ± 1 %), (f1 = interference frequency)			
• Common-mode interference (only possible with 4-wire transducers (Ucm ≤ 20 V AC)	> 100 dB		
• Series-mode interference (peak value of disturbance < nominal value of input range)	> 40 dB		
Crosstalk attenuation between inputs (U_{ISO} < 60 V)	> 70 dB		
Operating error	± 0.15%		
Basic error	± 0.1%		
Temperature error (relative to input range)	± 0.001%/K		
Linearity error (relative to input range)	± 0.01 %		
Repeatability (in steady-state condition at 25 °C, relative to input range)	± 0.1%		
Influence of a HART signal modulated on the input signal in relation to the input range (in addition to the basic error) **			
Status, interrupts, diagnostics			
Status display	No		
Group error display (SF LED)	Yes		
Diagnostic interrupt	Configurable		
Diagnostic functions	Configurable		
HART communication			
Monodrop/multidrop operation	Monodrop only		
Primary / secondary master	Only primary master ***		
Characteristics of the transducer supply			
• Supply voltage for transducer with 22 mA transducer current (measurement resistance on module already taken into account)	≥ 18 V (when UN = 24 V)		
Sensor selection data			
Input ranges (rated values / input resistance)			
• Current	0 mA to 20 mA 4 mA to 20 mA ± 20 mA	140 Ω 140 Ω 140 Ω	
Permissible input current for current input (destruction limit)	40 mA		

* Cycle time = Basic conversion time per channel x number of enabled channels

** For HART use, an integration time of 100 ms is recommended. The parameter assignment of a smoothing level additionally improves the analog signal behavior.

*** In redundant operation the module with the higher address is the secondary master.

10.5.2.1 Parameters of the AO 8 x 16 Bit HART

Parameter assignment

The parameters are assigned using the parameter assignment dialog of HW Config.

Parameters of the AO 8 x 16 Bit HART

You can find an overview of the assignable parameters and their default settings for the AO 8 x 16 Bit HART in the following table.

The default settings apply when you have not assigned parameters in HW Config or you have not changed any parameters.

Table 10-25 Parameters of the AO 8 x 12 Bit

Parameter	Value range	Default	Scope
Diagnostic interrupt enable	Yes/No	Yes	Module
Diagnostics • Group diagnostics • Short-circuit test • HART group diagnostics • Discrepancy analysis *	 Yes/No Yes/No Yes/No Yes/No	 Yes Yes Yes No	 Channel Channel Channel Channel
Output type	Disabled I (current)	I (current)	Channel
Output range	0 to 20 mA 4 to 20 mA	4 mA to 20 mA	Channel
Reaction to CPU STOP	ASS Outputs have no current or voltage LWH Keep last value Use EWS substitute value	EWS	Channel
Substitute value	0/4 ... 20 mA	0 mA or 4 mA	Channel
HART • HART function ** • Repetitions	 Yes/No 0-10	 Yes 10	 Channel Channel

* Only for redundant operation of the AO 8 x 16 with the automation system S7-400H
** Can only be activated in the output range 4 to 20 mA

Output type / Output range

The resolution of the analog values is 15 bits + sign.

Selected output type	Measuring range
Current	0 mA to 20 mA 4 mA to 20 mA

Group diagnostics

The diagnostics parameter "Group diagnostics" enables the signaling of channel-specific errors to be switched off, with the exception of parameter assignment errors.

The wire-break check is set by adjusting the group diagnostics.

Wire break is detected if the current to be output cannot be driven by the module, e.g. because the impedance of the connected actuator is too high.

Short-circuit test

A short-circuit detection is possible for the current output ranges 0/4 to 20 mA.

Condition: A minimum output current of 4 mA must be set. Short-circuit detection applies when the connected burden is <30 Ω.

Discrepancy analysis

In the discrepancy analysis, the current output by the channel is read back and compared with the current to be output. If the values differ (conformity error > 1mA), there is an incorrect response or a defect of the module. The module reports "Readback error" and switches off the affected analog output.

Requirement:

- The HART function is not activated
- The module is used redundantly. In the "Redundancy" tab you can define the two modules that are to be operated redundantly.
- Group diagnostics is activated

10.5.2.2 Diagnostics of the AO 8 x 16 Bit HART

Introduction

Module faults and channel faults are displayed via the group error display (SF LED) and signaled via the diagnostic data records 0/1.

Diagnostic messages and possible corrective measures

Table 10-26 Diagnostics messages of the AO 8 x 16 Bit HART and possible remedial measures

Diagnostic message	Configurable	Possible cause of error	Corrective measure
No external auxiliary voltage	No	No supply voltage L+ of the module	Feed supply L+
Module parameters not assigned	No	Startup error	Reassign the module parameters
Incorrect parameters	No	One parameter, or the combination of parameters, is not plausible	Reassign the module parameters

Diagnostic message	Configurable	Possible cause of error	Corrective measure
Time monitoring tripped	No	Intermittently high electromagnetic interference	Eliminate the interference
EPROM error	No	Module defective	Replace the module
RAM error	No	Module defective	Replace the module
ADC/DAC error	No	Module defective	Replace the module
Parameter assignment error	No	One parameter, or the combination of parameters, is not plausible	Reassign the module parameters
Wire break	Yes (group diagnostics)	Encoder circuit / actuator is too high impedance	Use a different type of actuator, or modify the wiring, for example, use cables with larger cross-section
		Interruption of the cable between the module and the actuator	Establish the cable connection
		Channel not connected (open)	Check terminals
Short-circuit (possible as of product version 3)	Yes	Overload of the output	Eliminate overload
		Short-circuit of the output	Eliminate short-circuit
Readback error	Yes	Defect within the module	Replace the module
HART communication error	Yes (HART group diagnostics).	• HART field device is not responding • Timing error	• Check the process wiring • Correct the parameter assignment • Set output current of ≥4 mA • Increase the number of assigned repetitions

Diagnostic message	Configurable	Possible cause of error	Corrective measure
Primary variable outside of limits	Yes (HART group diagnostics).	• Incorrect parameters in the HART device • HART device has simulation and simulation is adjusted to "Primary variable outside of limits" • Incorrect measuring point • Primary variable assigned outside of limits	• Check the parameter assignment of the HART device • Correct the simulation • Check if the correct actuator is connected
Non-primary variable outside of limits	Yes (HART group diagnostics).	• Incorrect parameters in the HART device • HART device has simulation and simulation is adjusted to "Non-primary variable outside of limits" • Incorrect measuring point • Variable assigned outside of limits	
HART analog output current saturated	Yes (HART group diagnostics).	• Incorrect parameters in the HART device • HART device has simulation and simulation is set to a measured value that is too high • Incorrect measuring point	
HART analog output current specified	Yes (HART group diagnostics).	• Incorrect parameters in the HART device • HART device has simulation and simulation is set to a measured value that is too high • Incorrect measuring point	
HART additional status available *	Yes (HART group diagnostics).	HART device provides additional status.	
Maintenance demanded	Yes (HART group diagnostics).	Maintenance demanded pending	
HART re-parameterization, signaled by the connected field device	Yes (HART group diagnostics).	In the HART device status (= HART status bytes), the identifier for reconfiguration of the HART field device has been set.	
HART group error	Yes (HART group diagnostics).	Communication and command errors during HART operation that affect the connected HART field devices.	

* Is automatically deleted after 3 s

10.5.2.3 Readback option of the analog values of the AO 8 x 16 Bit HART

Readback capability

The analog outputs can be read in the user data area with a resolution of 8 bits (+ sign). Please note that the read back analog output is only available after a conversion time according to the accuracy.

Note

Please observe the following instructions for readability:

- The area of the readback values does not correspond to the STEP 7 system limits, but shows the readback value linearly depending on the current output range (see table below).
- If channels are deactivated or incorrectly parameterized, the respective readback value of the channel is written to the value "7FFF Hex".
- If the module is not parameterized, the 24-V-load voltage is missing or the module is defective, all readback values are written to the value "7FFF Hex".

Table 10-27 Readback value display

Readback value		Current output range	
Dec.	Hex.	0 mA to 20 mA	4 mA to 20 mA
32348	7E80	23.41 - 23.52 mA	22.72 - 22.81 mA
27648	6C00	20.00 mA	20.00 mA
0	0	0 mA	
- 6912	E500	-	0 mA

Note

A sufficient accuracy of the readback values is only guaranteed for measured values >16#0800.

10.6 Module diagnostic data

Module diagnostic data

Diagnostic data are provided by each diagnostics-capable ET 200PA SMART module for reading at any time.

Data records with diagnostic information

The diagnostic data of a module is contained in data records 0 and 1.

- Data record 0 contains 4 bytes of diagnostic data that describe the current state of the modules.
- Data record 1 contains the 4 bytes of diagnostic data, which are also contained in data record 0, and additionally module-specific diagnostic data, which describe the state of a channel or channel group.

Diagnostic interrupts

At released parameter "Diagnostic interrupt", the content of diagnostic data record 1 is transmitted as alarm information.

See section "Alarms".

Structure of the module diagnostic data

See additional alarm information in the section "Alarms".

10.7 HART

Overview

"HART" stands for "Highway Addressable Remote Transducer". HART is a registered trademark of the HART Communication Foundation (HCF), which owns all the rights to the HART protocol.

HART analog modules are analog modules that can perform HART communication in addition to their analog value.

HART analog modules can be used as HART interfaces for HART field devices. This means that HART field devices can be configured or diagnostic states read out for all the modules.

Advantages of HART

Using HART analog modules offers the following benefits:

- Connection compatibility with standard analog modules: Current loop 4 - 20 mA
- Additional digital communications via the HART protocol, e.g. for online change of field device parameters or for information, maintenance or diagnostic displays of field device states.
- Integrating field devices into the S7 system via the HART analog modules.

Use in the system

With a HART analog module, you can connect a field device to each channel. The module operates as a HART master, monodrop; the field devices as HART devices.

HART field devices with HART revision 5 to 7 are supported.

If the HART analog modules are operated redundantly, the modules with the higher address are addressed as secondary master and the modules with the lower address as primary master via the HART protocol.

Various software applications can transmit or receive data via a HART analog module, comparable to clients for which the HART analog module is used as a server:

- HART configuration tool:
  You can assign the HART parameters using an external hand-held device (HART hand-held) or a HART configuration tool (PDM). Whereas the configuration tool affects the entire HART analog module, the HART handheld is connected directly parallel to the field device. PDM (Process Device Manager) is available as a stand-alone unit or integrated in *STEP 7 HW Config*.
- HART system integration:
  The I/O module takes on the function of a "master" by receiving commands from the HART configuration tool, for example, forwarding them to the smart field device and sending back the responses. The interface of the HART analog module are data records that are transferred via the I/O bus. The data records must be created and interpreted by the HART configuration tool.

Reconfiguration of the field devices

The HART module generally accepts triggered reconfigurations for field devices. Access rights can only be allocated in the configuration tool.

Note that field devices usually signal each re-parameterization as configuration changed to the HART analog module. This causes a diagnostic interrupt in the automation system if enabled. During commissioning it is advisable to disable the diagnostic interrupt by configuring the HART analog module. A diagnostic interrupt can also be triggered, if enabled, when parameter reassignment is carried out with a hand-held device.

10.7.1 How HART works

Introduction

The HART protocol describes the physical form of the transfer: transfer procedures, message structure, data formats and commands.

HART signal

The figure below shows the analog signal with the modulated HART signal (FSK method), which consists of sine waves of 1200 Hz and 2200 Hz and has a mean value of 0. It can be filtered out using an input filter so that the original analog signal is available again.

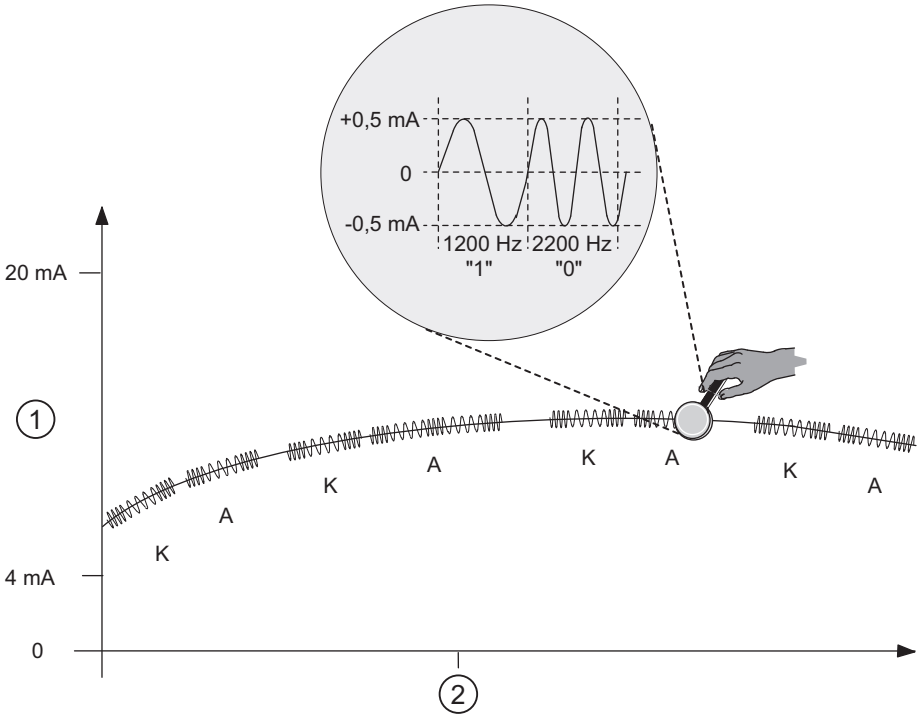

Figure 10-24 The HART signal

①	Analog signal
②	Time (seconds)
K	Command
A	Response

HART commands

The configurable properties of the HART field devices (HART parameters) can be set with HART commands and read out using HART responses. The HART commands and their parameters are divided into three groups with the following properties:

- Universal
- Common practice
- Device-specific

Universal commands must be supported by all manufacturers of HART field devices and common practice commands should be supported. There are also device-specific commands that apply only to the particular field device. The HART communication may only be handled by one client per channel. See section "HART communication data records".

Examples of HART commands

The following two tables show examples of HART commands:

Table 10-28 Examples of universal commands

Command	Function
0	Reads manufacturer and device type - only with this command 0 can field devices be addressed by means of a short frame address
11	Reads manufacturer and device type
1	Reads primary variable and unit
2	Reads current and percentage of range, digitally as floating-point number (IEEE 754)
3	Reads up to four pre-defined dynamic variables (primary variables, secondary variables, etc.)
13, 18	Reads or writes process tag name ("tag"), description and date (dates are also sent)

Table 10-29 Examples of common practice commands

Command	Function
36	Sets high range limit
37	Sets low range limit
41	Perform self-test
43	Sets the primary variable to zero

Structure of the HART protocol

Each HART frame sent from the I/O module to the connected field device (request frame) and each HART frame received by the field device (response frame) has the following basic structure.

PREAMBLE	STRT	ADDR	COM	BCNT	STATUS	DATA	CHK

PREAMBLE: Bytes (0xFF) for synchronizing,
default: 5 bytes (can be changed using DS131 - DS138)

STRT: Start character (start delimiter)

ADDR: Address of the field device (1 byte; short address or 5 bytes; long address)

COM: HART command number

BCNT: Byte count, number of bytes to follow without checksum

STATUS: HART device status (1st and 2nd status byte). Only present for a response frame. For structure of HART device status, see below.

DATA: Transferred user data / parameters, quantity depending on command (0…230 bytes)

CHK: Checksum

With the exception of the preamble bytes, this structure is contained in the communication data of the HART command interface. See section "HART communication data records".

HART responses always contain data. Status information (HART device status; 1st and 2nd status bytes) is always sent together with a HART response. status bytes) is always sent together with a HART response. You should evaluate these to make sure the response is correct.
The HART analog module evaluates the status information OFF and makes it available as S7 diagnostics in the system.

Structure of HART device status (1st and 2nd status bytes)

Table 10-30 1st status byte

Bit 7 = 1: "Communication error"	
Bit 6 = 1 Bit 5 = 1 Bit 4 = 1 Bit 3 = 1 Bit 2 = 0 Bit 1 = 1 Bit 0 = 0	Parity error Overflow Framing error Checksum error Reserved Overflow in the receive buffer Reserved
Bit 7 = 0: "No communication error" Bit 0...6: "Specific according to the response frame"	

Table 10-31 2nd status byte

Bit 7 = 1	Device fault
Bit 6 = 1	Configuration changed
Bit 5 = 1	Startup (cold start)
Bit 4 = 1	Additional status information available
Bit 3 = 1	Fixed analog output current setting
Bit 2 = 1	Analog output current saturated
Bit 1 = 1	Secondary variable outside the limits
Bit 0 = 1	Primary variable outside the range

Burst mode

The HART analog modules do not support burst mode. HART commands with set burst bit are ignored and are not forwarded to the connected field device.

Example of HART programming (HART command interface)

For HART channel 0, command 01 is to be sent in transparent message format to the HART field device with address "98 CF 38 84 F0".
A positive edge at input 4.0 of a digital input module leads to the writing of the HART command.

The following assumptions are made:

- The module address of the HART module is 512 (200_H)
- The data record is stored in DB80: starting at address 0.0, length 11 bytes.
- In this example, DB80 (request data record for channel 0) consists of 11 bytes.

Table 10-32 FC80: Writing the data record with SFC 58 into DB80

```
                                    Explanation
    U E 4.0
    FP M 101.0
    = M 104.0
m2: CALL SFC 58
    REQ :=M104.0                    Write request
    IOID :=B#16#54                  Address range identifier
    LADDR :=W#16#200                Module address for HART AI
    RECNUM :=B#16#50                Data record number 80Datensatz with length 11
    RECORD :=P#DB80.DBX0.0 BYTE 11  bytes (must correspond exactly to the length
                                    that is to be transmitted)
    RET VAL :=MW93                  RET_VAL from SFC 58 (OK/error/...)
    BUSY :=M51.0                    Write operation is not finished yet
    A M 51.0
    SPB m2
    BE
```

Table 10-33 DB80: Transparent message format

Byte	Initial value (hex)	Comment (Hex)
0	00	Req_Control (00 = Transparent message format. 40 = Transparent message format with SHC string)
1	05	Number of preamble bytes (05-14)
2	82	Start character (02 = Short frame with command 0) (82 = Long frame with other commands)
3	98	Address (with command 0, the address is exactly 1 byte long and has the value 0.)
4	CF	
5	38	
6	84	
7	F0	
8	01	Command (CMD)
9	00	Length in bytes
10	98	Checksum (CHK) (calculated as EXOR addition starting from byte 2 "Start character" up to the last byte of the command. The checksum must not be sent with the job.)

A HART command can also be sent in the compact message format. In this case, the data transmitted via DB 80 is reduced to 4 bytes.

Table 10-34 DB80: Compact message format

Byte	Initial value (hex)	Comment (Hex)
0	20	Req_Control (20 = Compact message format 60 = Compact message format with SHC string)
1	05	Number of preamble bytes (5…20, 255)
2	01	Command (CMD)
3	00	Length in bytes

You can learn when the response from the field device was received by cyclically reading data record DS81 for HART channel 0. The response is always supplied in transparent message format.

Table 10-35 FC81: Reading of the response to DB81 with SFC 59

```
                                        Explanation
m3: CALL SFC 59
    REQ :=1                             Read request
    IOID :=B#16#54                      Address range identifier
    LADDR :=W#16#200                    Module address for HART AI
    RECNUM :=B#16#51                    Data record number 81
    RECORD :=P#DB81.DBX0.0 BYTE 75      Data record
    RET_VAL :=MW100                     RET_VAL from SFC 59 (OK/error/...)
    BUSY :=M49.1                        Read operation is not finished yet
    A M 49.1
    SPB m3
    BE
```

The program part UM 49.1 to SPB m3 is only required if reading is to occur synchronously.

As long as "0x03" is in byte 0 of DB81, the response has not been received from the field device. Positive response data that you can evaluate is available from the field device as soon as bit 2 = 1 in byte 0.

If response data is incorrect, see the tables "HART group error indications in response byte 1 (Extended Response Control)" or "HART protocol error in response byte 2 when responding from the field device to the module (error code)" in this manual.

Successive HART command

HART analog modules support the processing of HART commands as SHC string (Succesive HART Command).

This means that if the module detects a HART command with a set SHC bit on a channel, the complete HART command processing on the HART module is reserved for this channel for approx. 2 seconds. For all other channels of the modules, no HART commands are processed during this period.

With each additional HART command with set SHC bit, the module reserves the HART command processing for this channel again for a further 2s. If a HART command without SHC bit set is detected for this channel or if no other command for this channel occurs within 2s after the previous HART command, the module returns to "normal" HART command processing. This means that all HART channels are processed again.

As of V6.0 SP5, PDM supports the processing of HART jobs with SHC string. To do this, you must also activate "HART RIO SHC-Mode" in the "Communications" tab in PDM under "Options -> Settings".

Note

- The HART variables of all HART channels are no longer updated while a HART channel of the module is processing an SHC string, and the complete HART processing of the module is thus reserved for this channel. They remain unchanged in terms of value and quality code.
- HART commands for other channels are not processed and are acknowledged correspondingly.

10.7.2 Configuring HART variables

Introduction

Numerous HART field devices make available additional measured quantities (e.g. sensor temperature). These can be read out if they are adjusted accordingly in the field device configuration in PDM. The HART variables can be used to transfer the set measured values directly from the field device to the I/O area of your automation system.

The HART analog modules independently read the HART variables (dynamic variables) supported by the connected HART field devices.

You can use the properties dialog of the module, regardless of the number of configured channels, to configure up to 8 HART variables in the input data.

Address assignment

The HART module occupies 16 input/output bytes. If you configure HART variables, the module occupies an additional 5 bytes in the input range for each HART variable.

If you use all 8 HART variables, the HART module occupies a total of 56 input bytes (16 bytes + 8 x 5 bytes = 56 bytes).

The configuration "none" does not occupy any additional input byte.

Configuration of HART variables

You assign parameters to the HART variables in STEP 7 HW-Config.

You can configure up to 4 HART variables for a channel.

- PV (Primary Variable)
- SV (Secondary Variable)

- TV (Tertiary Variable)
- QV (Quaternary Variable)

If you want to assign the HART variable later in the user program, use the CiR parameter. CiR is a placeholder and reserves the address space for a HART variable. HART variables that you do not use must be configured with the parameter "none".

Structure of the HART variables

The HART variables are structured as follows:

4 bytes HART data	1 byte QC

Structure of the "quality code" byte

The quality code (QC) can have the following values:

Quality code (QC)	Meaning
0x4C or 0	Initialization: 0 value from IM650 and 0x4C from module
0x18	Communication abort / no communication
0x0C	Error in the HART device
0x47	HART device is busy
0x84	OK "Configuration changed"
0x80	OK

Reconfigure HART variables in RUN

In CiR-capable automation systems S7-400 and in the S7-400H system you may reconfigure the HART variables in RUN.

10.7.3 HART communication data records

Transfer data records

The HART communication may only be handled by one client per channel. Each channel has a separate transfer area available. Each transfer area consists of the command and response data record.

If a channel is handled by several clients, the response made available by the module cannot be allocated to one client with certainty. The module does not support client management.

Coordination rules for HART communications

- Each client/channel is assigned fixed data record numbers:

Channel	Client	Data record
0	Command	80
0	Response	81
1	Command	82
1	Response	83
2	Command	84
2	Response	85
3	Command	86
3	Response	87
4	Command	88
4	Response	89
5	Command	90
5	Response	91
6	Command	92
6	Response	93
7	Command	94
7	Response	95

- After writing a command record, a client must read the response record before it is allowed to write another command record.
- The client can evaluate the "processing status" in the response data record: If the "processing status" indicates "successful" or "error", the data record contains current response data or error indications.
- The data record must always be read in full as the data record can be changed by the module after it is first read with a successful or error status.
- The status component in the response frame (= HART status bytes) provides information on whether errors have occurred and, if so, which errors.

Structure of data record for command

The figure below shows the command data record with which you can write a command in the transfer area of a client. The HART analog module sends the command to the connected HART field device.

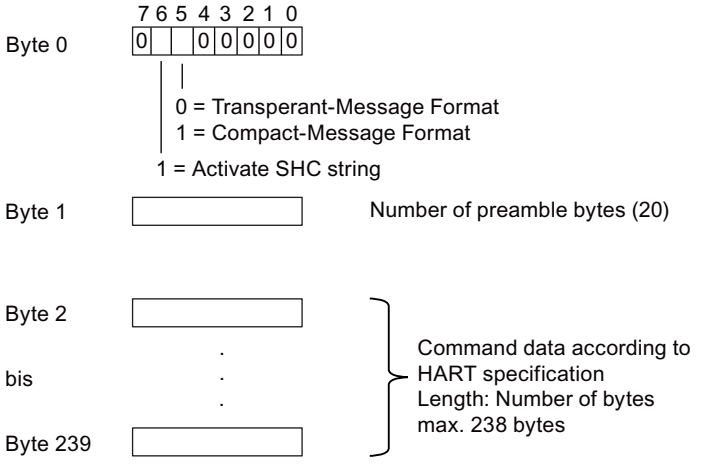

Figure 10-25 Command data record of the HART analog module

HART commands are processed both in transparent message format and in compact message format (see Technical Specification for HART). However, the response data from the module is always made available in transparent message format.

Notes on the command

The same client may not transmit a command again until it has read the response to the previous command.

Notes on response

When reading the response record, you must ensure that a current response record has arrived:

- If the processing status in the response data record indicates "successful" or "incorrect", the data record contains current response data or error indications.

Structure of data record for response

The figure below shows the structure of the response data record, which contains the response to the previously sent HART command and error or status.

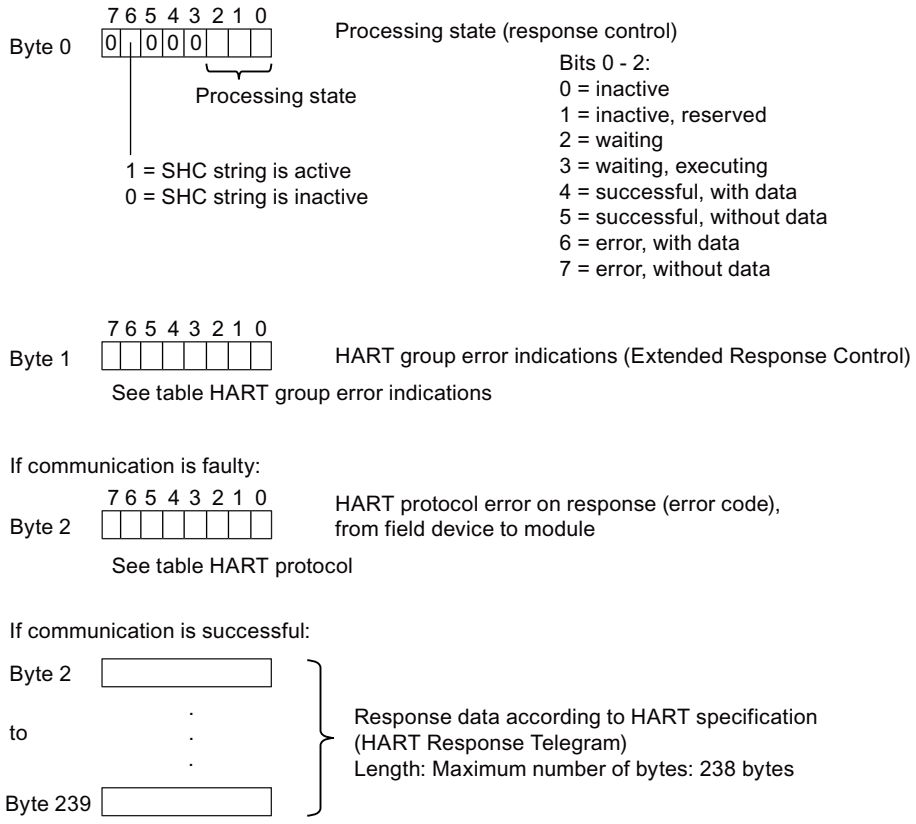

Figure 10-26 Response data record of the HART analog modules

Evaluation of the response data

If you have a current response record in front of you, you can perform the following checks:

- By specifying "last command" you ensure that the response belongs to the command sent.
- By evaluating the "Group error displays" (see table below) you can localize error cases.
- Further error messages are included in "HART protocol error on response" (see table below) and the two HART status bytes.
- In the group error bytes,the events are set to bit "1" in the error state.

Table 10-36 HART group error indications in response byte 1 (Extended Response Control)

Bit no.	HART group fault display	Meaning
0	Additional status information available	Corresponds to bit 4 in the channel-specific error bytes in diagnostic data record 1 (2nd HART status byte). The HART command 48 provides you with further status information if required.
1	Erro with HART communication--> Entry "HART communication error" in diagnostic data record 1	In this case the field device has detected a communication error when receiving the command. The error information is located in the 1st HART status byte (in the response data record or diagnostic data record 1), which is accepted unchanged.
2	Parameter check	0: HMD parameters unchanged 1: Check HMD parameters
3	always 0	Reserved
4-7	HART protocol error at response --> Entry "HART communication error" in diagnostic data record 1	Error during HART communication from the field device to the module, i.e. the response was received incorrectly. 0: Unspecified error 1: HMD error 2: Channel fault 3: Command error 4: Query error 5: Response error 6: Query rejected 7: Profile query rejected 8: Manufacturer-specific query rejected 9 - 15: Not used Information about the cause of the error is in response byte 2. See the table below.

Table 10-37 HART protocol error in response byte 2 on response from field device to module (error code)

Error	HART protocol error in byte 2	Meaning
3	Command error	0-127: HART protocol, Bit 7=0
4	Query error	HART protocol, bit 7=1 bit 0: Reserved Bit 1: Receive buffer overflow Bit 2: reserved Bit 3: Checksum error Bit 4: Framing error Bit 5: Overflow error Bit 6: Parity error Bit 7: 1
5	Response error	HART protocol, bit 7=1 bit 0: GAP timout Bit 1: Receive buffer overflow Bit 2: Timeout Bit 3: Checksum error Bit 4: Framing error Bit 5: Overflow error Bit 6: Parity error Bit 7: 1
6	Query rejected	0: Unspecified 1: Short format not supported 2: SHC not supported 3: Impermissible command 4: No resources
7	Profile query rejected	0: Not specified (not supported)
8	Manufacturer-specific query rejected	0: Not specified (not supported)

10.8 Dimensional drawings of the signal modules

Signal module

The following figure shows the dimension drawing of an ET 200PA SMART I/O module.
The appearance of the module can be different. The specified dimensions are always the same.

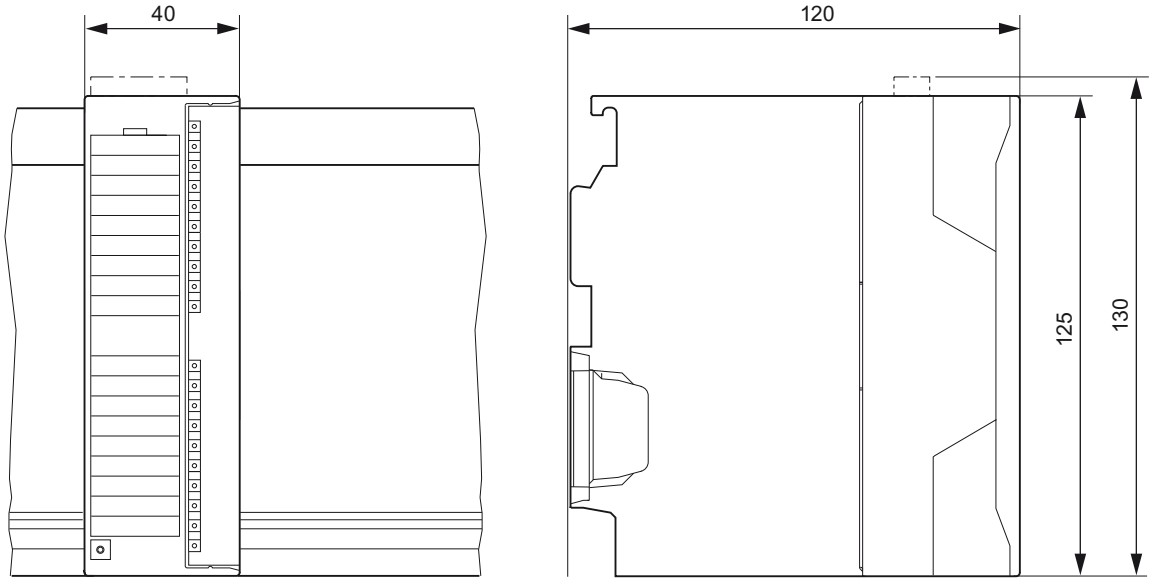

Standards and approvals 11

11.1 Currently valid markings and approvals

Introduction

This section contains the technical specifications of the system:

- The standards and test values that the ET 200PA SMART complies with and fulfills.
- The test criteria according to which the ET 200PA SMART was tested.

Validity of the information on the components

NOTICE
Markings and approvals In the manual, you can find the markings and approvals which are generally possible or planned in the system. The marking or approval that is printed on the components of the ET 200PA SMART system continues to be exclusively valid!

Reference

The certificates for the markings and approvals can be found on the Internet under Service&Support (https://support.industry.siemens.com/cs/ww/en/).

Safety information

⚠ WARNING
Explosion hazard If the electric circuit is live, the following must be observed: • Do not disconnect the ET 200PA SMART components in a flammable or combustible atmosphere. • Do not open the ET 200PA SMART components in a flammable or combustible atmosphere.

WARNING

Field of application

This ET 200PA SMART components are intended for use only in Class I, Division 2, Groups A, B, C, D; Class I, Zone 2, Group IIC environments or non-hazardous locations.

WARNING

Ambient conditions

The ET 200PA SMART components may only be used in areas with a pollution degree of not more than 2 according to IEC 60664-1.

WARNING

Enclosure and cables

The ET 200PA SMART system is intended for installation in an enclosure / control cabinet. The internal operating temperature of the enclosure / control cabinet corresponds to the maximum permissible ambient temperature of the module.

Cables must be used whose maximum permissible operating temperature is at least 30 °C above the maximum permissible ambient temperature.

WARNING

Ambient temperature of the device

The temperature of the ET 200PA SMART system housing can be higher than 70 °C if the device is operated at an ambient temperature of more than 50 °C. The device must therefore be installed so that it is only accessible to service technicians or users who are aware of the reason for the restricted access and the necessary safety measures at an ambient temperature of over 50 °C.

WARNING

Safety functional extra low voltage

Ensure that the supply and input voltages of the IO system are generated safely separately U_{rated}= 24 V DC +-20% (⎓).

Power supply according to the following standards:

- IEC/UL 61010-2-201
  This safety functional extra-low voltage with the required protection is referred to as SELV (Safety Extra Low Voltage) / PELV (Protective Extra Low Voltage).

or

- NEC Class 2, as in National Electrical Code (r) (ANSI / NFPA 70)

If the device is connected to a redundant power supply (two separate power supplies), both power supplies must meet these requirements.

NOTICE

Removal and replacement

If you replace components, compliance with Class I, DIV 2 can become invalid.

Replacing components may affect the usability of the device.

NOTICE

Risk of injury

Read the manual before use to avoid injury.

11.2 CE marking

Introduction

The ET 200PA SMART components fulfill the requirements and protective aims of the following EC directives and conforms with the harmonized European standards (EN) that have been

published for programmable logic controllers in the Official Journals of the European Community:

- Low-Voltage Directive
- EMC Directive
- Explosion Protection Directive

The EC Declaration of Conformity can be downloaded from the Internet (keyword "declaration of conformity").

Low-Voltage Directive

2014/35/EU "Electrical equipment designed for use within certain voltage limits" (Low Voltage Directive). According to the requirements of EN 61010-2-201, the components of the distributed I/O system ET 200PA SMART have been tested in compliance with the low voltage directive.

EMC Directive

2014/30/EU "Electromagnetic Compatibility" (EMC Directive)

Use in industry

SIMATIC products are designed for industrial applications.

Area of application	Requirements for interference emission	Requirements for interference immunity
Industry	EN 61000-6-4	EN 61000-6-2

Use in residential areas

Note

The ET 200PA SMART components are intended for use in industrial areas. If used in residential areas, it may interfere with radio/TV reception.

If you use the ET 200PA SMART components in residential areas, you must ensure compliance with EN 61000-6-3 regarding the emission of radio frequency interference.

Suitable measures to achieve limit class B for radio frequency interference include:

- Installation of the ET 200PA SMART components in grounded control cabinets / switch boxes
- Use of interference filters in the supply lines

Use in the area of power stations

The ET 200PA SMART components fulfill the EMC requirements according to EN 61000-6-5.

11.3 Explosion protection

ATEX approval

Type Examination Certificate Number	DEKRA 19ATEX0114X
Standards	EN 60079-0
	EN 60079-7
Identification	II3G Ex ec IIC T4 Gc
The certificate is valid for the "DEKRA 19ATEX0114X (https://support.industry.siemens.com/cs/document/109779298/for-use-in-hazardous-locations-atex-ec-type-examination-certificate-dekra?dti=0&lc=en-WW)" products listed in the certificate.	

Note

Special conditions

1. The ET 200PA SMART components may only be used in areas with a pollution degree of not more than 2 according to EN 60664-1.
2. ET200PA SMART must be installed in a suitable enclosure which provides a degree of protection of at least IP54 in accordance with EN 60079-7, taking into account the ambient conditions of use.
3. Measures must be taken to protect against exceeding the rated operating voltage by transient interference voltages of more than 119 V.

IECEx - approval

Type Examination Certificate Number	IECEx DEK 19.0023X
Standards	IEC 60079-0
	IEC 60079-7
Identification	Ex ec IIC T4 Gc
The certificate is valid for the "IECEx DEK 19.0023X (https://support.industry.siemens.com/cs/ww/en/view/109768662)" products listed in the certificate.	

Note

Special conditions

1. The ET 200PA SMART components may only be used in areas with a pollution degree of not more than 2 according to EN 60664-1.
2. ET200PA SMART must be installed in a suitable enclosure which provides a degree of protection of at least IP54 in accordance with EN 60079-7, taking into account the ambient conditions of use.
3. Measures must be taken to protect against exceeding the rated operating voltage by transient interference voltages of more than 119 V.

Use in hazardous area Zone 2

- A permissible installation location is below the maximum permissible installation height of 2000 m above sea level.
- A manufacturer declaration in accordance with EN 60079-0 or a manufacturers declaration for zone 2 in accordance with EN 60079-15 must be available for the enclosure.

Contact

12

Introduction

Range	Contact
Repair service	Name: Mr. Yu Ming Yang E-mail: mingyang.yu@siemens.com Org.: DF FA MF SEWC QM QR Tel.: +86 28 6238 7267 Address: Siemens Electronic Works Chengdu No. 99 Tianyuan Road, West Park Chengdu Hi-Tech Zone, 611730 Chengdu, Sichuan Province, China
Manufacturer	Siemens AG Org.: DF FA MF SEWC PU ENG1 Tel: +86 28 6238 7267 E-mail: dajun.wen@ad011.siemens.com Address: Siemens Electronic Works Chengdu No. 99 Tianyuan Road, West Park Chengdu Hi-Tech Zone, 611730 Chengdu, Sichuan Province, China

Index

2

24 V DC supply, 23

A

Access aids in the operating instructions, 5
Active bus module, 15, 20
    Installing, 35
Address assignment, 245
AI 16 x 16 Bit
    Diagnostic messages, 201
    Properties, 192
    Technical specifications, 197
    Wiring diagram, 192, 193
AI 16 x 16 Bit
    Parameters, 200
AI 8 x 16 Bit
    Diagnostic messages, 175, 189
    Parameters, 173
    Properties, 165, 176
    Technical specifications, 171
    Wiring diagram, 166
AI 8 x TC/4 x RTD, 202
    Diagnostic messages, 216
    Parameters, 213
    Properties, 202
    Technical specifications, 208
    Thermocouples, 214
    Wire break check, 214
    Wiring diagram, 204
Ambient temperature
    permissible, 18
Analog input module AI 16 x 16 Bit, 192
Analog input module AI 8 x 16 Bit, 165
Analog input modules
    SM 331, AI 8 x 13 Bit, 152
Analog module
    Dimension drawing, 252
Analog output module
    Short-circuit to ground, 225, 235
    Wire break, 225
Analog output module AO 8 x 12 Bit, 217
AO 8 x 12
    Properties, 218
    Wiring diagram, 220
AO 8 x 12 Bit
    Diagnostic messages, 225, 234
    Parameters, 224
Article no.
    6ES7 650-8AK60-0AA0, 165
    6ES7 650-8AK60-1AA0, 165
    6ES7 650-8AK70-0AA0, 192
    6ES7 650-8AK70-1AA0, 192
    6ES7 650-8AR60-0AA0, 202
    6ES7 650-8AR60-1AA0, 202
    6ES7 650-8AT60-1AA0, 176
    6ES7 650-8BK60-0AA0, 217
    6ES7 650-8BK60-1AA0, 217
    6ES7 650-8DK70-0AA0, 130
    6ES7 650-8DK70-1AA0, 130
    6ES7 650-8DK80-0AA0, 126
    6ES7 650-8DK80-1AA0, 126
    6ES7 650-8EK70-0AA0, 142
    6ES7 650-8EK70-1AA0, 142
    6ES7 650-8EK80-1AA0, 137
    6ES7650-8AE60-0AA0, 152
    6ES7650-8AE60-1AA0, 152

B

Backplane bus cover, 15, 36
Block diagram
    IM 650, 120
Burst mode, 242
Bus cable, 16
Bus connector
    Connecting, 42
Bus module
    Active, 15, 20
    Installing, 35
    Replacing, 65
Bus module cover, 15, 36

C

Cable cross-sections, 42
Channel-related diagnostics, 99
    Error messages, 101
Channel-related error messages, 101
Clearances, 18
Commissioning
    Requirements, 53
Components of an ET 200PA SMART, 15

Configuration
HART variable, 245
horizontal, 17
Number of active bus modules, 21
Number of modules, 21
vertical, 17
Configuration message frame
Look on the Internet under ..., 5
Configuration with active bus modules, 35
Connecting comb, 43
Current consumption
Rules, 24

D

Delay time
ET 200PA SMART, 120
Device status, 242
Device-related diagnostics, 115
DI 16 x DC 24 V
Diagnostic messages, 136
Parameters, 134
Redundant sensor supply, 131
Resistance circuit of the sensors, 132
Technical specifications, 133
Wiring diagram, 131
DI 16 x DC 24 V, with hardware and diagnostic interrupts
Properties, 130
DI 32 x DC 24 V
Properties, 126
Technical specifications, 128
Wiring diagram, 127
Diagnostic blocks, 87
Diagnostic interrupt, 105, 115
Diagnostic messages
AI 16 x 16 Bit, 201
AO 8 x 12 Bit, 225, 234
DI 16 x DC 24 V, 136
DO 16 x DC 4 V/0.5 A, 147
of the AI 8 x 16 Bit, 175, 189
of the AI 8 x TC/4 x RTD, 216
Diagnostics, 92
Channel-related, 99
Channel-related error messages, 101
Device-related, 115
Expanded, 92
H-status, 103
Interrupts, 105
Module status, 98
Structure, 92
Digital input module
DI 16 x DC 24 V, with hardware and diagnostic interrupts, 130
DI 32 x DC 24 V, 126
Digital module
Dimension drawing, 252
Digital output module
DO 32 x DC 24 V/0.5 A, 137
Digital output module DO 16 x DC 24 V/0.5 A, 142
Dimension drawing
Analog module, 252
Digital module, 252
IM 650, 119
Signal module, 252
Discharging interference
via integrated RC network, 27
Discharging of interference
via integrated RC network, 27
Distributed I/O device, 13
DO 16 x DC 24 V/0.5 A
Diagnostics, 147
Properties, 142
Technical specifications, 144
Wiring diagram, 143
DO 32 x DC 24 V/0.5 A
Properties, 138
Technical specifications, 140
Wiring diagram, 139
DP address
See PROFIBUS address, 39
DP master, 13
DP slave, 13
Driver blocks, 87

E

Electrical influences
Protection from, 23
Electrical installation
Configuring, 22
Electrically isolated modules, 29
EMERGENCY STOP devices, 22
End of cycle interrupt, 105
End sleeves, 42
Equipment
open, 31
Error messages
Channel-related, 101
ET 200PA SMART
Accessories, 15
Components, 15

Installing, 31
Wiring, 42
Ex partition, 15
Installing, 36

F

Fixing bracket
for shield connection clamp, 49
Front connector
Wiring, 47
Wiring position, 47
Front connector coding, 49
Fuse
Replacing, 66

G

General technical specifications
See Module Data Reference Manual, 117
Grounded supply, 24

H

Hardware interrupt, 105
of IM 650, 113
Time stamping, 113
HART
Command interface, 242
Commands, 240
Definition, 238
Device status, 242
Operating principle, 239
Programming, 242
Protocol, 238, 241
Signal, 240
Variables, 245
HART variables
Configuring, 245
H-status, 103

I

I/O, 87
Interfacing with driver blocks, 87
I/O device
distributed, 13
I/O module, 16
Identifier-related diagnostics, 96
Identifying of modules
with slot numbers, 38
IM 650, 16
Block diagram, 120
Dimension drawing, 119
LEDs, 89
Manufacturer ID, 95
Parameters, 81, 117
Replacing, 60
Setting the PROFIBUS address, 39
Startup with time stamping, 56
Technical specifications, 118
Time synchronization, 80
Wiring, 43
Input delay, 121
Installation
of the modules on rail for active bus modules, 35
Installing
of ET 200PA SMART, 31
Interfacing, 87
I/O with driver blocks, 87
Interrupt
Diagnostic, 105
End of cycle, 105
from device-related diagnostics, 115
Hardware, 105
Plugging, 105
Pulling, 105
Isolation stripping lengths, 42

L

Labeling plate, 48
LEDs
IM 650, 89
Line voltage, 23
Line voltage disconnect switch, 23
Load power supply
Properties, 25

M

Maintenance, 59
Manufacturer ID, 95
Master PROFIBUS address, 94
Measurement types and measuring ranges
SM 331, AI 8 x 13 Bit, 161
Measuring ranges
Resistance measurement, 214
Voltage measurement, 214
Module drivers, 87

Module overview
Analog input modules, 150
Analog output module, 216
Digital input modules, 125
Digital output modules, 137
Module plugged interrupt, 105, 114, 115
Module pulled interrupt, 105, 114, 115
Module status, 98
Modules
Identifying with slot numbers, 38
isolated, 29
Non-isolated, 30
Mounting rail
Fixing holes, 33
for active bus modules, 15, 32
for module replacement in runtime, 32
Lengths, 19
Protective conductor connection, 35

N

Network
PROFIBUS DP, 14
Non-isolated modules, 30
Number wheel, 38

O

Open equipment, 31
Order numbers, 3
Output delay, 121
Overall configuration
in the TN-S system, 26
Overvoltage protection, 148

P

Parameter assignment message frame
Look on the Internet under ..., 5
Parameters
AI 16 x 16 Bit, 200
AI 8 x 16 Bit, 173
AI 8 x TC/4 x RTD, 213
AO 8 x 12 Bit, 224
DI 16 x DC 24 V, 134
IM 650, 117
Parameters of modules
DO 16 x DC 24 V/0.5 A, 146
SM 331; AI 8 x 13 Bit, 162
Power loss
Rules, 24
Power supply, 15
Replacing, 59
Wiring, 43
Product version, 3
PROFIBUS address
setting, 39
PROFIBUS DP, 13
Network, 14
Properties
AI 16 x 16 Bit, 192
AI 8 x 16 Bit, 165, 176
Protection from electrical influences, 23
Protective conductor connection
on mounting rail, 35
Purpose of the operating instructions, 3

Q

Quality code, 246

R

Radio interference radiation, 22
Range of validity of these operating instructions, 3
RC network
integrated, 27
Recycling, 5
Redundancy
Switchover time, 121
Time stamping, 79
Reference potential
ungrounded, 27
Replacing
Active bus module, 65
IM 650, 60
Response time, 120
Rules
General, for operation of the ET 200PA
SMART, 22

S

Shield connection clamp, 49
Shield connection element, 49
Short-circuit to ground
Analog output module, 225, 235
Signal module
Dimension drawing, 252
Slave diagnostics, 92
Slot numbers, 38

SM 331, AI 8 x 13 Bit
Measurement types and measuring ranges, 161
Properties, 152
Technical specifications, 157
Wiring diagram, 153
SM 331; AI 8 x 13 Bit
Parameters, 162
Specifications
For operation of the ET 200PA SMART, 22
Startup
IM 650 with time stamping, 56
of the system, 22
Station status 1 to 3, 93
Strain relief, 47
Supply
24 V DC, 23
Grounded, 24
Switchover time
For redundancy, 121
Synchronization interval, 78, 81

T

Technical specifications
AI 16 x 16 Bit, 197
AI 8 x 16 Bit, 171
AI 8 x TC/4 x RTD, 208
General, see Module Data Reference
Manual, 117
IM 650, 118
Thermocouple
AI 8 x TC/4 x RTD, 214
Time stamping
For redundancy, 79
Hardware interrupt, 113
Startup of the IM 650, 56
Time synchronization, 80
TN-S system, 26

U

Ungrounded reference potential, 27

V

Voltage measurement
AI 8 x TC/4 x RTD, 214

W

Wire break
Analog output module, 225
Wire break check
AI 8 x TC/4 x RTD, 214
Wiring, 42
Wiring diagram
AI 16 x 16 Bit, 192, 193
AI 8 x 16 Bit, 166
AI 8 x TC/4 x RTD, 204
Wiring of power supply and IM 650, 43
Wiring position
of the front connector, 47
Wiring rules, 42