MANUFACTURER DOCUMENT PACKAGE

Manufacturer's Manual

Reference package for procurement and maintenance review

SIEMENS

6ES7138-4CA01-0AA0

DIAGNOSED LOAD POWER MODULE

Used with the applicable SIMATIC ET 200S PM-E 24 VDC configuration.

REFERENCE PACKAGE

OFFICIAL DOCUMENT

Selected official manufacturer pages follow this cover.

Source: Siemens PM-E 24 VDC, A5E00514527-01, section 2.3

Diagnostics: Fuse blown

Use this parameter to enable a diagnostic message because of a blown fuse.

If a fuse has blown only the diagnostic message of the affected power module is sent to the DP master. The SF error LEDs of all modules in the relevant potential group light.

Voltage type

Use this parameter to select the load voltage that is connected to the power module: direct voltage or alternating voltage.

If the load voltage fails or a fuse blows the correct diagnosis is returned.

2.3 PM-E 24 VDC power module (6ES7138-4CA01-0AA0)

Properties

- The PM-E 24 VDC power module monitors the supply voltage for all the electronic modules in the potential group. The supply voltage is fed in by means of the TM-P terminal module.
- You can use any electronic module in the potential group of the PM-E 24 VDC power module except the 2DI 120 VAC Standard, 2DI 230 VAC Standard and 2DO 24 VAC to 230 VAC/1 A.
- The current status of the power module is stored in the status byte in the process input image (PII). This is updated irrespective of whether the "No Load Voltage" diagnosis has been enabled.
- The PM-E 24 VDC to 48 VDC power module is suitable for fail-safe modules.



Caution

Only connect the specified rated load voltage of 24 VDC to the TM-P terminal module of the power module.

The connected rated load voltage must correspond to the supply voltage of the electronic modules in the voltage group.

General terminal assignment

Note

Terminals A4 and A8 are only available at specified terminal modules.

Terminal assignment for PM-E 24 VDC (6ES7138-4CA01-0AA0)				
Terminal	**Assignment**	**Terminal**	**Assignment**	**Notes**
2	L+	**6**	L+	• L+ Rated load voltage 24 VDC • M: Ground • AUX1: Protective-conductor terminal or potential bus (freely usable up to 230 VAC)
3	M	**7**	M	
A4	AUX1	**A8**	AUX1	

Usable terminal modules

Usable terminal modules for PM-E 24 VDC (6ES7138-4CA01-0AA0)			
TM-P15C23-A1 (6ES7193-4CC30-0AA0)	TM-P15C23-A0 (6ES7193-4CD30-0AA0)	TM-P15C22-01 (6ES7193-4CE10-0AA0)	← Spring terminal
TM-P15S23-A1 (6ES7193-4CC20-0AA0)	TM-P15S23-A0 (6ES7193-4CD20-0AA0)	TM-P15S22-01 (6ES7193-4CE00-0AA0)	← Screw terminal
TM-P15N23-A1 (6ES7193-4CC70-0AA0)	TM-P15N23-A0 (6ES7193-4CD70-0AA0)	TM-P15N22-01 (6ES7193-4CE60-0AA0)	← Fast Connect
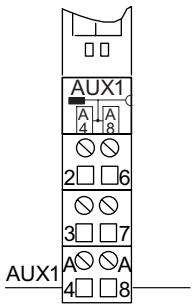	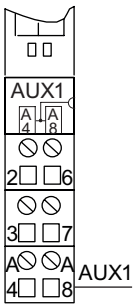	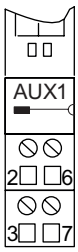	Wiring examples 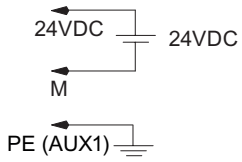

Block diagram

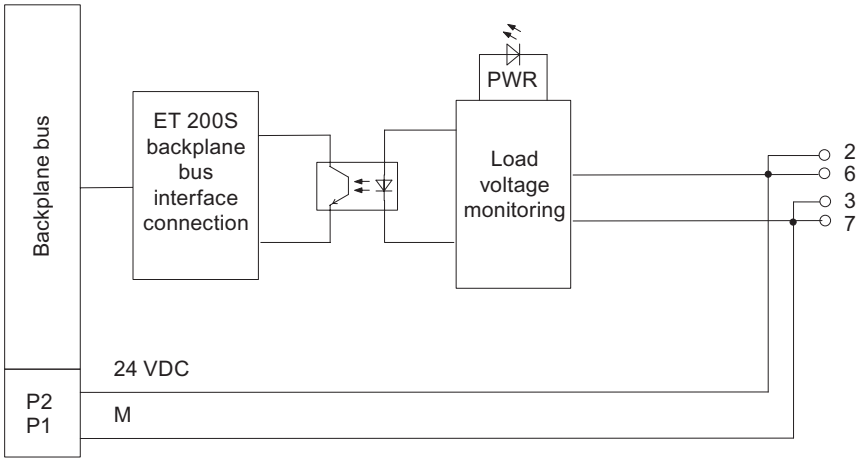

Figure 2-2 Block diagram of the PM-E 24 VDC power module

PM-E 24 VDC power module technical specifications (6ES7138-4CA01-0AA0)

Dimensions and Weight	
Dimensions W × H × D (mm) (the total dimensions depend on the selected terminal module)	15 × 81 × 52
Weight	Approx. 35 g
Voltages, currents, potentials	
Rated load voltage	24 VDC
• Overvoltage protection	no
Protection with automatic circuit breakers	yes, tripping characteristic B, C
Max. current-carrying capacity (up to 60° C)	10 A
• Short-circuit protection	no
Galvanic isolation	
• Between rated load voltage and backplane bus	Yes
• Between the power modules	Yes
Insulation test voltage	500 VDC
Current consumption	
• From the load voltage L+ (no load)	max. 4 mA
Power dissipation of the module	typ. 100 mW
Parameter length	3 bytes
Status, interrupts, diagnostics	
Diagnostic function	Yes
• General fault • Load voltage monitoring	Red "SF" LED Green "PWR" LED
• Diagnostic information readable	Yes

8.5 Specifications concerning insulation tests, protection class, and rated voltage for ET 200S

Test voltage

The insulation resistance is tested during routine tests using the following test voltage according to IEC 61131-2:

Circuits with a rated voltage of U_e relative to other circuits or ground	Test voltage
< 50 V	500 VDC
< 150 V	2500 VDC
< 250 V	4000 VDC

Degree of Pollution / Overvoltage Category to IEC 61131

- Pollution level 2
- Overvoltage category
  - When U_N = 120 / 230 VAC: III
  - at U_N = 24 VDC: II

Protection Class

Protection class I in accordance with IEC 60536

Protection class IP 20

Protection class IP 20 according to IEC 60529 for all ET 200S modules i.e.:

- Protection against touch with standard test fingers
- Protection against foreign bodies with a diameter greater than 12,5 mm
- No specific protection against water

Rated voltage for operation

The ET 200S distributed I/O system works with the rated voltage and corresponding tolerances shown in the following table.

ET 200S modules	Rated voltage	Tolerance range
Everything except motor starters	24 VDC	20.4 to 28.8 VDC [1]
		18.5 to 30.2VDC[2]
	120 VAC	93 to 132 VAC (47 to 63 Hz)
	230 VAC	187 to 264 VAC (47 to 63 Hz)

[1] Static value: Generation as functional extra-low voltage with safety isolation in accordance with IEC 60364-4-41

[2] Dynamic value: Including ripple, e.g., during three phase current bridge rectification