MANUFACTURER DOCUMENT PACKAGE

Manufacturer's Manual

Reference package for procurement and maintenance review

EMERSON

KJ3225X1-BA1 12P4174X032

EIGHT-CHANNEL RTD INPUT CARD

Used with the applicable DeltaV Series 2 configuration.

REFERENCE PACKAGE

OFFICIAL DOCUMENT

Selected official manufacturer pages follow this cover.

Source: Emerson KJ3225-cert

DeltaV™ Scalable Process System Zone 2 Installation Instructions

Emerson Process Management

12P2046 Rev. AE

11 Jun 2013

Emerson Process Management
Meridian East
Meridian Business Park
Leicester, LE19 1UX, UK

Emerson a.s.
European System and Assembly
Piešťanská 1202/44
Nové Mesto nad Váhom 91528
Slovakia

Fisher-Rosemount Systems, Inc. – an Emerson Process Management company
1100 W. Louis Henna Blvd.
Round Rock, TX 78681

© 1999 – 2013 Fisher-Rosemount Systems, Inc. All Rights Reserved.

DeltaV and the DeltaV design are marks of one of the Emerson Process Management group of companies. All other marks are the property of their respective owners.

Introduction and System Definition

The system described below represents a typical DeltaV Series-1 or Series-2 System. This comprises of Unspecified Safe Area Apparatus and I/O Modules and all other necessary apparatus such as power supplies, carriers, carrier extenders, etc. A system may be configured in a horizontal or vertical position depending on the type of carriers used. Each system has a maximum length of 6.5 meters (including interconnections) and may include up to 64 I/O modules.

General installation instructions of these components, the hardware specifications and the environmental specifications are covered in the **Hardware Manual, Installing Your DeltaV™ Digital Automation System**. Special installation requirements, applicable to the use in Zone 2 hazardous location are covered here and are defined below. This system may also be placed in a Safe Area and have its field wiring enter a Zone 2 hazardous area as long as all criteria listed in this document are met.

Applicable Standards

- EN 60079-0:2012
- IEC 60079-0 (Ed. 6, 2011)
- EN 60079-11:2012
- IEC 60079-11 (Ed. 6, 2011)
- EN 60079-15:2010; EN 60079-15:2005
- IEC 60079-15 (Ed. 4, 2010); IEC 60079-15 (2005)

Reference to further documentation

Laws, standards, or directives applicable to the intended use must be observed. In relation to hazardous areas, Directive 1999/92/EC must be observed. The corresponding EC type examination certificates and IECEx certificates are an integral part of this document.

Due to constant revisions, documentation is subject to permanent change. Please refer only to the most up-to-date version available from Fisher Rosemount Systems / Emerson Process Management.

Marking

For marking details refer to the individual ATEX Instruction Sheet for each module.

Notes, Warnings and Limitations

1. Provision shall be made external to the system to prevent the rated voltage being exceeded by transient disturbances of more than 40%. The system must be mounted in an enclosure in accordance to EN 60079-15, or one of the protections listed in Clause 1 in EN 60079-0 with at least a degree of protection IP54 according to EN 60529:1991 and pollution degree 2, as defined in IEC 60664-1. When the system is installed in an enclosure, the enclosure must have a label that reads, “Before opening please confer the Zone 2 Installation Document”. Metal enclosures, which are rated IP-54, pass the required impact specification by default. Consult the hardware manual for temperature de-rating calculations for system components when located in an enclosure.
2. The System consists of the items noted in Figure 1 and in Table 1.

   Ambient Temperature: -40°C < Ta < +70°C (unless noted in Table 1). See the **Hardware Manual, Installing Your DeltaV™ Digital Automation System** for complete specifications.

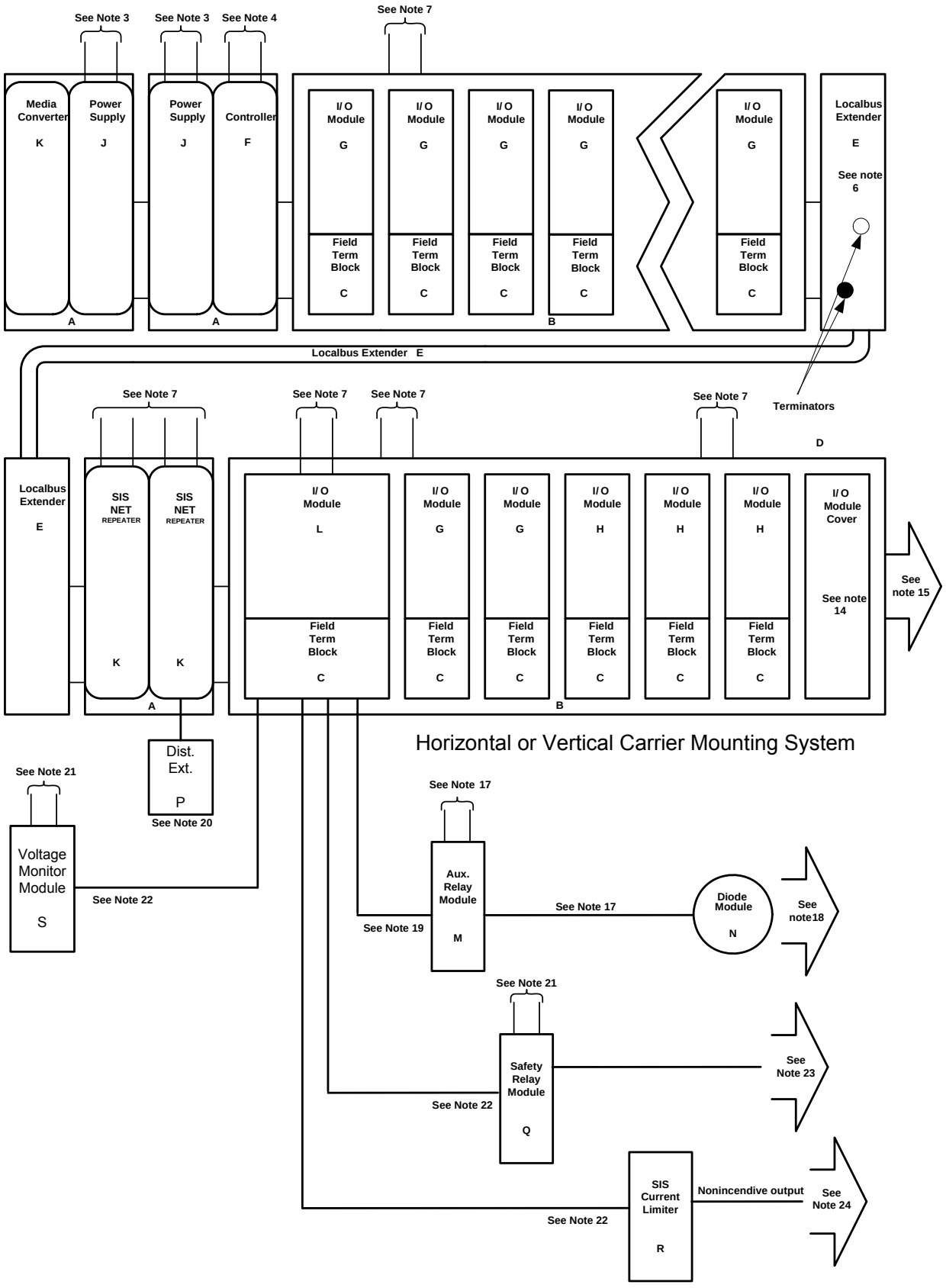
See Note 3
See Note 3
See Note 4
See Note 7
Media Converter K
Power Supply J
Power Supply J
Controller F
I/O Module G
Field Term Block C
Localbus Extender E
See note 6
A
A
B
Localbus Extender E
Terminators
D
See Note 7
See Note 7
See Note 7
See Note 7
Localbus Extender E
SIS NET REPEATER K
I/O Module L
I/O Module G
I/O Module H
I/O Module Cover
See note 14
See note 15
Horizontal or Vertical Carrier Mounting System
Dist. Ext. P
See Note 20
See Note 21
Voltage Monitor Module S
See Note 22
See Note 17
Aux. Relay Module M
See Note 19
See Note 17
Diode Module N
See note18
See Note 21
Safety Relay Module Q
See Note 22
See Note 23
SIS Current Limiter R
See Note 22
Nonincendive output
See Note 24

Figure 1

3. The voltage source to the power supply must not generate or contain in normal operation, a source of potential in excess of
    a. 12.6VDC and supply no more than 16 Amps maximum when power supply is configured in 12-volt pass- through mode.
    b. 30 VDC when power supply in configured 24-volt mode.
4. The Communication Network connected to the DeltaV Controller must not be connected to a source, which generates or contains, under normal condition a potential in excess of 60 VAC or 75 VDC.
5. Bussed field power must not be connected to a supply, which generates or contains, under normal condition, a source of potential in excess of 30VDC.
6. 12V-system power must be de-energized before disconnecting any carriers or local bus extender cables or terminators where applicable.
7. Field Power supplied to the I/O modules either at the field terminal or as bussed field power via the I/O carrier or direct connection must be removed before removing or connecting I/O modules from the carrier.
8. Modules H, F, J, K, and L may NOT be replaced while the 12V-system power is energized.
9. I/O modules G may be replaced while the 12V system power is energized.

WARNING: For a module, which may be removed and inserted with the 12V system power energized (See Table 1) – Only one module is to be removed or inserted at a time.

10. The specific output characteristics for the energy limited I/O modules are listed in Table 1. Definitions for output characteristics are as follows:

    Energy-Limited Circuits

    An energy-limited circuit is one in which any arc, spark, or thermal effect produced during normal operation is prevented by energy limitation from igniting the surrounding flammable atmosphere.

    Non-Sparking Circuit

    A non-arcing circuit is one in which any arc, spark, or thermal effect capable of igniting the surrounding flammable atmosphere is prevented from occurring by mechanical design. Non-sparking circuits are typically not energy-limited and can contain energy levels capable of igniting the flammable atmosphere if interrupted without further means of protection.

    Normal Operation

    Apparatus is said to be in normal operation when it conforms electrically and mechanically with its manufacturer's published specification and performs without any fault.

11. Loop Assessment
    a) For I/O modules labelled (Ex nL IIC T4), an I/O loop assessment MUST be completed on all energy-limited nodes.
    b) If a loop assessment is not possible or practical, a nonincendive component marked (Ex nL) may be used as an Ex nA part so far as the live making and breaking of circuits is excluded. In addition provisions must be made to prevent possible transients exceeding the supply voltage by more than 40% as prescribed in the standard 60079-15. When a supply [Ex nL] is used it is assumed the Ex nL component is sufficiently protected from transients by the supply.
12. Each I/O Module interfaces to the field via a Terminal Block assembly.

WARNING: A Terminal Block fuse may NOT be removed with field power energized for non-sparking circuits. To determine field circuit status see Table 1.

13. A rotary keying system ensures compatibility between I/O Modules and Terminal blocks after installation is complete (see figure 2 below). The exception: the SLS Terminal blocks do not have keys. They physically can only connect to the SLS 1508 controller.

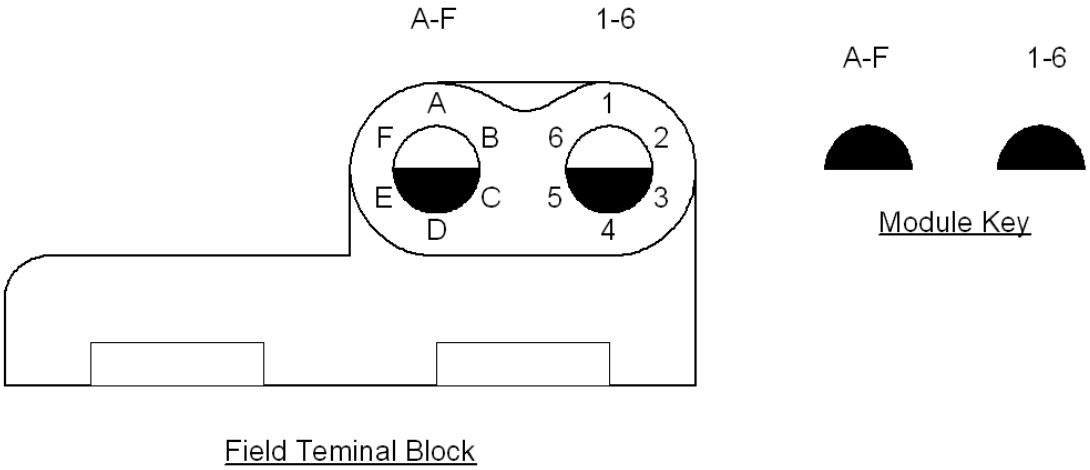

Figure 2

14. A Module Cover KJ4001-FA1 must be fitted to any permanently unoccupied location on an I/O Module Carrier. (Permanently unoccupied implies no I/O Module AND no Terminal Block are intended for that particular location.)
15. Additional I/O Carriers or a Local Bus Extender may be used to further distribute the system power provided:
    a) The combination of up to eight I/O Carriers and Local Bus Extenders shall not exceed maximum length of 6.5 m (21.3 ft).
    b) The interconnecting cable between enclosures must be in conduit.

CAUTION: Carriers, Extenders, Extension Cables must NOT be unplugged unless either

A. The System has been de-energized, or

B. The area is known to be non-hazardous.

16. When using a KJ3004X1-BA1 in a safe area and connecting to energy limited field circuits, use the KJ4020X1-BA1, Fieldbus Power Supply Conditioner KJ4020X1-BD1. Please refer to Figure 3.
17. Field Power supplied to the KJ2231X1-BA1 or BB1 Auxiliary Relay Modules must be removed (power de-energized) before removing or inserting Relay Module Power connectors.
18. Field Power must be removed (power de-energized) before removing or connecting the customer load to the KJ2231X1-BC1 Diode Module.
19. Field Power to the KJ2201X1-BA1 SLS Module (Module L) must be de-energized before removing or connecting the I/O connections to the KJ2231X1-BA1 or BB1 Relay Module.
20. Field Power supplied to the KJ2222X1-BA1 SISNet Distance Extender (Module P) must be removed (power de-energized) before removing or inserting the SISNet Distance Extender power connector.

21. Field Power supplied to the KJ2231X1-EA1 SIS Relay Module or EB1 Voltage Monitor Module must be removed (power de-energized) before removing or inserting Module Power connectors.
22. Field Power to the KJ2201X1-BA1 SLS Module (Module L) must be de-energized before removing or connecting the I/O connections to the KJ2231X1-EA1 or EB1 Modules.
23. Field Power must be removed (power de-energized) before removing or connecting the customer load to the KJ2231X1-EA1 SIS Relay Module.
24. Output of Module R is an Energy Limited Circuit (Nonincendive output) acceptable for use in Zone-2 installations.
25. **WARNING:** Substitution of components may impair intrinsic safety

Intended Use

The device is only approved for appropriate and intended use. Ignoring these instructions will void any warranty and absolve the manufacturer from any liability.

The device must only be operated in the ambient temperature range and at the relative humidity (non-condensing) specified.

The input and output modules listed in Table 1 act as an interface between signals from the hazardous area (Ex area) and the safe area (NON-Ex area).

The modules listed in this document are used in C&I (control and instrumentation) technology for the galvanic isolation of C&I signals such as 20 mA and 10 V standard signals or alternatively for adapting or standardizing signals. Devices that incorporate intrinsically safe circuit are used for operating intrinsically safe field devices in hazardous areas.

Avoid improper use

Protection of the operating personnel and the overall system is not ensured if the product is not being used according to its intended purpose.

Mounting and Installation Instructions

Prior to mounting, installation, and commissioning of the device the installer should be familiar with the device and carefully read the instruction manual.

The installation instructions specified by IEC/EN 60079-14 must be observed.

The EC type examination certificate, certificates and/or declarations of conformities have to be observed - if applicable – especially the special conditions of use.

If the device has already been operated in general electrical systems, it is not allowed to install it in electrical systems used in combination with hazardous areas.

The device fulfils a degree of protection IP 20 according to IEC/EN 60529.

To ensure the IP degree of protection all seals of the device housing (ultrasonic welding) and the housings themselves must be undamaged and correctly fitted.

The device may only be installed and operated in Zone 2 if it has been mounted in an enclosure with degree of protection IP 54 according to IEC/EN 60529. The enclosure must have a declaration of conformity according to 94/9/EC for at least category 3G.

The System must be supplied with a SELV / PELV or class 2 power supply with a maximum DC voltage of Um = 40VDC at the edge connectors.

Carrier terminals can be used to connect a cable screen of the field wiring. The screen bar itself must be connected to the equipotential bonding system of the hazardous area.

Model	Ref. Fig. 1	Description	Removal or Insertion with System Power Energized	Key Pos.	Field Circuit Class For Definitions please refer to Item 10.
KJ3222X1 - BA1	G	Analog Input Card with HART, Series-2 2-Wire	YES[1]	A 1	Energy limited field circuits Uo = 28.7V, Io = 33mA, Po = 607mW Co=.17uF, Lo=11mH
		Analog Input Card with HART, Series-2 4-Wire	YES[1,2]		NON-SPARKING
KJ3222X1 - EA1	C	Redundant Analog Input Terminal Block	N/A		N/A
KJ3223X1 - BA1	G	Analog Input, 16-Channel 4-20mA, 2-Wire with HART, Series-2	YES[1]	A 2	Energy limited field circuits Uo = 28.7V, Io = 33mA, Po = 607mW Co=.17uF, Lo=11mH
KJ3223X1 - EA1	C	16-Channel Analog Terminal Block	N/A1		N/A
KJ3224X1 - BA1	G	Thermocouple Card 8 Channel, Series-2	YES[1]	C 1	Energy limited field circuits Uo = 5.5, Io = 0.3mA/Ch, 0.3 mA/Card Po = 0.8mW Co=1000µF, Lo=1000mH
KJ3224X1 - EA1	C	Series-2 Thermocouple Terminal Block	N/A		N/A
KJ3225X1 - BA1	G	RTD Card 8 Channel, Series-2	YES[1]	C 1	Energy limited field circuits Uo = 5.5, Io = 0.6mA/Ch, 4.8 mA/Card Po = 0.4mW Co=1000µF, Lo=1000mH
KJ3231X1 - BA1	H	Isolated Analog Input Card, Series-2	NO	C 2	Energy limited field circuits Uo = 5.5, Io = 0.3mA/Ch, 0.3 mA/Card Po = 0.8mW Co=1000µF, Lo=1000mH
KJ3231X1 - EA1	C	Isolated Terminal Block	N/A		N/A
KJ3241X1 - BA1	H	Serial Interface Card, Series-2	NO	D 4	NON-SPARKING
KJ3241X1 - EA1	C	Redundant Serial Interface Terminal Block	N/A		N/A
KJ3242X1 - BA1	H	Fieldbus H1 Card, Series-2	NO	D 6	Energy limited field circuits Ui = 40, Ii = 165 mA, Ci = 0.022 uF, Li = 480 uH Pi = 520mW (Groups A, B, C, D) [3] Ui = 40, Ii = 225 mA, Ci = 0.022 uF, Li = 480 uH (Groups A, B) [3]
		When used with KJ3242X1-GA1 Term. Block			NON-SPARKING
		When used with KJ3242X1-HA1 Term. Block			NON-SPARKING
KJ3242X1 - GA1	C	Simplex H1 Terminal Block	N/A	D 6	NON-SPARKING
KJ3242X1 - HA1	C	Redundant H1 Terminal Block	N/A	D 6	NON-SPARKING
KJ3242X1 - EA1	C	Simplex Fieldbus H1 Terminal Block	N/A	D 6	N/A
KJ3242X1 - FA1	C	Redundant Fieldbus H1 Terminal Block	N/A	D 6	N/A
KJ3243X1 - BA1	H	Profibus DP Card Series 2	NO	D 3	NON-SPARKING
KJ3243X1 - BB1	H	Redundant Profibus DP Card, Series 2	NO	D 3	NON-SPARKING
KJ3243X1 -EA1	C	Redundant Profibus Terminal Block	N/A	D 3	NON-SPARKING
KJ3244X1 - BA1	H	DeviceNet Card Series 2	NO	D 5	NON-SPARKING
KJ3245X1 - BA1	H	AS-i Card, Series 2 (-25°C to +70°C)	NO	D1	NON-SPARKING
KJ4001X1 - BA2	A	2 wide Carrier	NO	N/A	N/A
KJ4001X1 - BA3	A	2 wide Carrier	NO	N/A	N/A
KJ4001X1 - BB1	B	8-Wide I/O Interface Carrier	NO	N/A	N/A
KJ4001X1 - BE1	B	8-Wide I/O Interface Carrier with Shield Bar	NO	N/A	N/A
KJ4001X1 - BH1	A	2-Wide Power Carrier	NO	N/A	N/A
KJ4001X1 - CA1	C	I/O Terminal Block	N/A		N/A
KJ4001X1 - CB1	C	Fused I/O Terminal Block	N/A		N/A
KJ4001X1 - CC1	C	4- Wire I/O Terminal Block	N/A	A 1	N/A
KJ4001X1 - CD1	C	Mass Termination 10 Pin Assembly	N/A	B 6	N/A
KJ4001X1 - CE1	C	Mass Termination 16 Pin Assembly	N/A	A 1	N/A
KJ4001X1 - CF1	C	Mass Termination 24 Pin Assembly	N/A	A 1	N/A