MANUFACTURER DOCUMENT PACKAGE

Manufacturer's Manual

Reference package for procurement and maintenance review

SIEMENS

6SL3055-0AA00-3AA1

TERMINAL EXPANSION MODULE

Used with the applicable SINAMICS TM31 configuration.

REFERENCE PACKAGE

OFFICIAL DOCUMENT

Selected official manufacturer pages follow this cover.

Source: Siemens 6SL3055-0AA00-3AA1 technical data and applicable product instructions

6SL3055-0AA00-3FAx	Unit	Value
Voltage drop, output (I/O power supply to the output)	V_{DC}	0.5
Max. summed current of outputs (per group) up to 60°C up to 50°C up to 40°C	 A_{DC} A_{DC} A_{DC}	 2 3 4
Response time	The response time of the digital inputs/outputs comprises the following: • Response time on the component itself (approx. 1/2 DRIVE-CLiQ cycle). • Transfer time via the DRIVE-CLiQ connection (approx. 1 DRIVE-CLiQ cycle). • Evaluation on the Control Unit (see function diagram) Additional information can be taken from the following references: Reference: /LH1/ SINAMICS S120/S150 List Manual, Chapter "Function diagrams/Terminal Module 15"	
PE/ground connection	At the housing with M4 screw	
Weight	kg	1.0

5.3 Terminal Module TM31

5.3.1 Description

The Terminal Module TM31 is a terminal expansion that is snapped onto a EN 60715 standard mounting rail. Terminal Module TM31 can be used to increase the number of available digital inputs/digital outputs and also the number of analog inputs/analog outputs within a drive system.

The TM31 contains the following interfaces:

Table 5- 9 Interface overview of the TM31

Type	Quantity
DRIVE-CLiQ interfaces	2
Digital inputs	8
Bidirectional digital inputs/outputs	4
Analog inputs	2
Analog outputs	2
Relay outputs	2
Temperature sensor input	1

5.3.2 Interface description

5.3.2.1 Overview

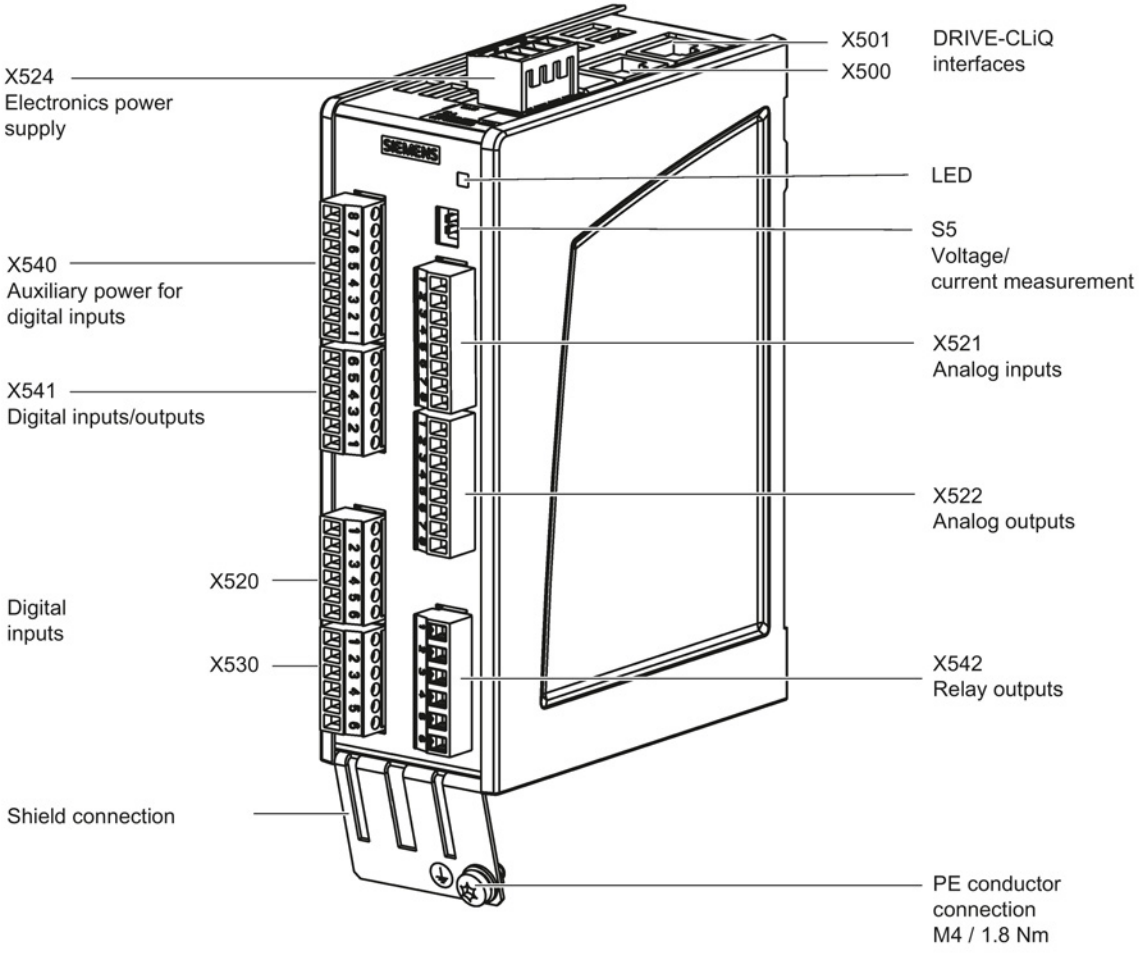

Figure 5-7 Interface overview TM31

5.3.2.2 X500/X501 DRIVE-CLiQ interfaces

Table 5- 10 X500/X501: DRIVE-CLiQ interfaces

	Pin	Signal name	Technical data
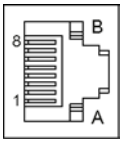	1	TXP	Transmit data +
	2	TXN	Transmit data -
	3	RXP	Receive data +
	4	Reserved, do not use	
	5	Reserved, do not use	
	6	RXN	Receive data -
	7	Reserved, do not use	
	8	Reserved, do not use	
	A	+ (24 V)	Power supply
	B	M (0 V)	Electronics ground

The blanking covers for the DRIVE-CLiQ interfaces are included in the scope of delivery.
Blanking covers (50 x) Article No.: 6SL3066-4CA00-0AA0

Note

The maximum DRIVE-CLiQ cable length is 100 m.

5.3.2.3 X520 digital inputs

Table 5- 11 X520: Digital inputs

	Terminal	Designation[1)]	Technical data
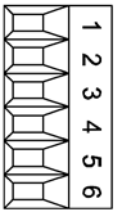	1	DI 0	Voltage: -3 … +30 V Electrical isolation: Yes Reference potential: M1 Input characteristic acc. to IEC 61131-2, type 1 Input voltage (including ripple) "1" signal: 15 … 30 V "0" signal: -3 … +5 V Input current at 24 V DC: type. 9 mA for "1" signal: > 0.5 mA Input delay for "0" → "1": typ. 50 µs max. 100 µs For "1" → "0": typ. 130 µs/max. 150 µs
	2	DI 1	
	3	DI 2	
	4	DI 3	
	5	M1	
	6	M	
Type: Screw terminal 1 (Page 331)			

[1)] DI: Digital input; M: Electronics ground; M1: reference potential

Note

Ensuring the function of digital inputs

An open input is interpreted as "low".

Terminal M1 must be connected so that the digital inputs (DI) can function.

This is achieved by using one of the following measures:

1. Providing the ground reference of the digital inputs
2. A jumper to terminal M
   Note: This removes isolation for these digital inputs.

5.3.2.4 X521 analog inputs

Table 5- 12 X521: Analog inputs

	Terminal	Designation[1)]	Technical data
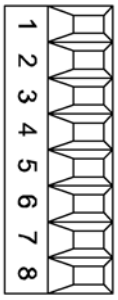	1	AI 0+	The analog inputs can be toggled between current and voltage input using switches S5.0 and S5.1. **As voltage input**: -10 ... +10 V; R_i > 100 kΩ Resolution: 11 bits + sign **As current input**: -20 ... +20 mA; R_i = 250 kΩ Resolution: 10 bits + sign
	2	AI 0-	
	3	AI 1+	
	4	AI 1-	
	5	P10	**Auxiliary voltage**: P10 = 10 V N10 = -10 V Current-carrying capacity: max. 3 mA Continuously short-circuit proof
	6	M	
	7	N10	
	8	M	
Type: Screw terminal 1 (Page 331)			

[1)] AI: analog inputs; P10/N10: auxiliary voltage; M or GND: ground reference

NOTICE
Damage or malfunctions through impermissible voltage values If a current exceeding ±35 mA flows through the analog current input, then the component could be destroyed. The common mode range must not be violated in order to avoid incorrect analog-digital conversion results. • The input voltage may only be in the range between -30 V and +30 V (destruction limit). • The common mode voltage may only be in the range between -10 V and +10 V (error limit). • The back EMF at the auxiliary voltage connections may only be in the range between -15 V and +15 V.

Note

The power supply for the analog inputs can be taken internally or from an external power supply unit

5.3.2.5 S5 current/voltage changeover switch for analog inputs

Table 5- 13 Current/voltage selector S5

	Switch	Function
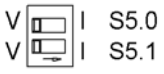	S5.0	Selector voltage (V)/current (I) AI0
	S5.1	Selector voltage (V)/current (I) AI1

5.3.2.6 X522 analog outputs/temperature sensor

Table 5- 14 X522: Analog outputs/temperature sensor

	Terminal	Designation[1)]	Technical data
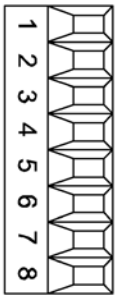	1	AO 0V+	You can set the following output signals using parameters: **Voltage**: -10 … +10 V (max. 3 mA) **Current 1**: 4 … 20 mA (max. load resistance ≤ 500 Ω) **Current 2**: -20 … +20 mA (max. load resistance ≤ 500 Ω) **Current 3**: 0 … 20 mA (max. load resistance ≤ 500 Ω) Resolution: 11 bits + sign Continuously short-circuit proof
	2	AO 0-	
	3	AO 0C+	
	4	AO 1V+	
	5	AO 1-	
	6	AO 1C+	
	7	+ Temp[2)]	Temperature sensor KTY84-1C130 / PT1000 / PTC Measuring current via temperature sensor connection: 2 mA
	8	- Temp[2)]	
Type: Screw terminal 1 (Page 331)			

1) AO xV: analog output voltage; AO xC: analog output current

2) Accuracy of the temperature measurement:
- KTY: ±7 °C (including evaluation)
- PT1000: ±5 °C (PT1000 tolerance class B according to DIN EN 60751 including evaluation)
- PTC: ±5 °C (including evaluation)

NOTICE

Damage or malfunctions through impermissible voltage values

If the back EMF is impermissible then damage and malfunctions may occur on the components.

- The back EMF at the outputs may only be in the range between -15 V and +15 V.

NOTICE

Damage to motor in the event of incorrectly connected KTY temperature sensor

If a KTY temperature sensor is connected with incorrect polarity, it is not possible to detect when the motor overheats. Overheating can cause damage to the motor.

- Connect a KTY temperature sensor with the correct polarity.



⚠WARNING

Danger to life due to electric shock in the event of voltage flashovers at the temperature sensor

Voltage flashovers in the signal electronics can occur in motors without safe electrical separation of the temperature sensors.

- Use temperature sensors that comply with the specifications relating to protective separation.
- If safe electrical separation cannot be guaranteed (for linear motors or third-party motors, for example), use a Sensor Module External (SME120 or SME125) or Terminal Module TM120.

5.3.2.7 X524 Electronics power supply

Table 5- 15 X524: Electronics power supply

	Terminal	Designation	Technical data
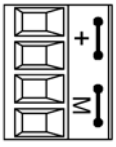	+	Electronics power supply	Voltage: 24 V DC (20.4 ... 28.8 V) Current consumption: max. 1.7 A[1)] Max. current through the jumper in the connector: 20 A (15 A according to UL/CSA)
	+	Electronics power supply	
	M	Electronics ground	
	M	Electronics ground	
Type: Screw terminal 2 (Page 331)			

[1)] Including the current consumption for the digital outputs and for supplying the sensor

The maximum cable length that can be connected is 30 m.

Note

The two "+" or "M" terminals are jumpered in the connector. This ensures that the supply voltage is looped through.

The current consumption increases by the value for the DRIVE-CLiQ node and digital outputs.

5.3.2.8 X530 digital inputs

Table 5- 16 X530: Digital inputs

	Terminal	Designation[1)]	Technical data
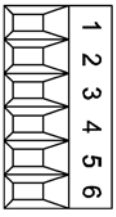	1	DI 4	Voltage: -3 … +30 V DC Electrical isolation: Yes Reference potential: M2 Input characteristic acc. to IEC 61131-2, type 1 Input voltage (including ripple) "1" signal: 15 … 30 V "0" signal: -3 … +5 V Input current at 24 V DC: typ. 9 mA for "1" signal: > 0.5 mA Input delay for "0" → "1": typ. 50 µs/max. 100 µs for "1" → "0": typ. 130 µs/max. 150 µs
	2	DI 5	
	3	DI 6	
	4	DI 7	
	5	M2	
	6	M	
Type: Screw terminal 1 (Page 331)			

[1)] DI: digital input; M: electronics ground; M2: reference potential

Note

Ensuring the function of digital inputs

An open input is interpreted as "low".

To enable the digital inputs (DI) to function, terminal M2 must be connected.

This is achieved by using one of the following measures:

1. Providing the ground reference of the digital inputs
2. A jumper to terminal M
   Note: This removes isolation for these digital inputs.

5.3.2.9 X540 auxiliary voltage for the digital inputs

Table 5- 17 X540: Auxiliary voltage for digital inputs

	Terminal	Designation	Technical data
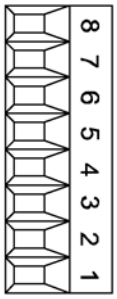	8	+24 V	Voltage: +24 V DC Max. total load current of +24 V auxiliary voltage for terminals X540 and X541 combined: 150 mA
	7	+24 V	
	6	+24 V	
	5	+24 V	
	4	+24 V	
	3	+24 V	
	2	+24 V	
	1	+24 V	
Type: Screw terminal 1 (Page 331)			

Note

This voltage supply is only for powering the digital inputs.

Note

If the 24 V supply is briefly interrupted, the auxiliary voltage for the digital inputs is deactivated for this time.

5.3.2.10 X541 bidirectional digital inputs/outputs

Table 5- 18 X541: Bidirectional digital inputs/outputs

	Terminal	Designation[1)]	Technical data
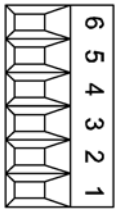	6	M	**As input**: Voltage: -3 … +30 V DC Electrical isolation: no Reference potential: M Input characteristic acc. to IEC 61131-2, type 1 Input voltage (including ripple) "1" signal: 15 … 30 V "0" signal: -3 … +5 V Input current at 24 V DC: typ. 9 mA for "1" signal: > 0.5 mA Input delay: for "0" to "1": Typ. 50 µs for "1" to "0": typ. 100 µs **As output**: Voltage: 24 V DC Electrical isolation: no Reference potential: M Output voltage "1" signal, with load: > X524.+ -2 V Output current For each output: ≤ 0.5 A Sum of all 4 outputs: ≤ 2 A Residual current for "0" signal: < 0.5 mA Short-circuit protection, automatic restart after a short-circuit Load types: ohmic, capacitive, inductive Output delay for "0" → "1": typ. 150 µs / max. 500 µs (ohmic load) for "1" → "0": typ. 50 µs (ohmic load) Switching frequency for ohmic load: max. 100 Hz for inductive load: max. 0.5 Hz for lamp load: max. 10 Hz Lamp load: max. 5 W
	5	DI/DO 11	
	4	DI/DO 10	
	3	DI/DO 9	
	2	DI/DO 8	
	1	+24 V	Auxiliary voltage: Voltage: +24 V DC Max. Total load current of +24 V auxiliary voltage for terminals X540 and X541 combined: 150 mA
Type: Screw terminal 1 (Page 331)			

1) DI/DO: Bidirectional digital input/output; M: Electronics ground

Note

An open input is interpreted as "low".

Note

If the 24 V supply is briefly interrupted, then the digital outputs are deactivated during this time.

5.3.2.11 X542 relay outputs

Table 5- 19 X542: Relay outputs

	Terminal	Designation[1]	Technical data
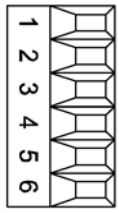	1	DO 0.NC	Contact type: Two-way contact max. load current: 8 A Max. switching voltage: 250 V_{AC}. 30 V_{DC} Max. switching capacity at 250 V_{AC}: 2000 VA (cos φ = 1) Max. switching capacity at 250 V_{AC}: 750 VA (cos φ = 0.4) Max. switching capacity at 30 V_{DC}: 240 W (resistive load) Required minimum current: 100 mA Output delay: ≤ 20 ms [2] Overvoltage category: Class II acc. to EN 61800-5-1
	2	DO 0.COM	
	3	DO 0.NO	
	4	DO 1.NC	
	5	DO 1.COM	
	6	DO 1.NO	
Type: Screw terminal 3 (Page 331) Maximum switching frequency at full load: 6 rpm			

[1] DO: digital output, NO: normally-open contact, NC: normally-closed contact, COM: mid-position contact

[2] Depending on the parameterization and the supply voltage (P24) of the TM31

5.3.3 Connection example

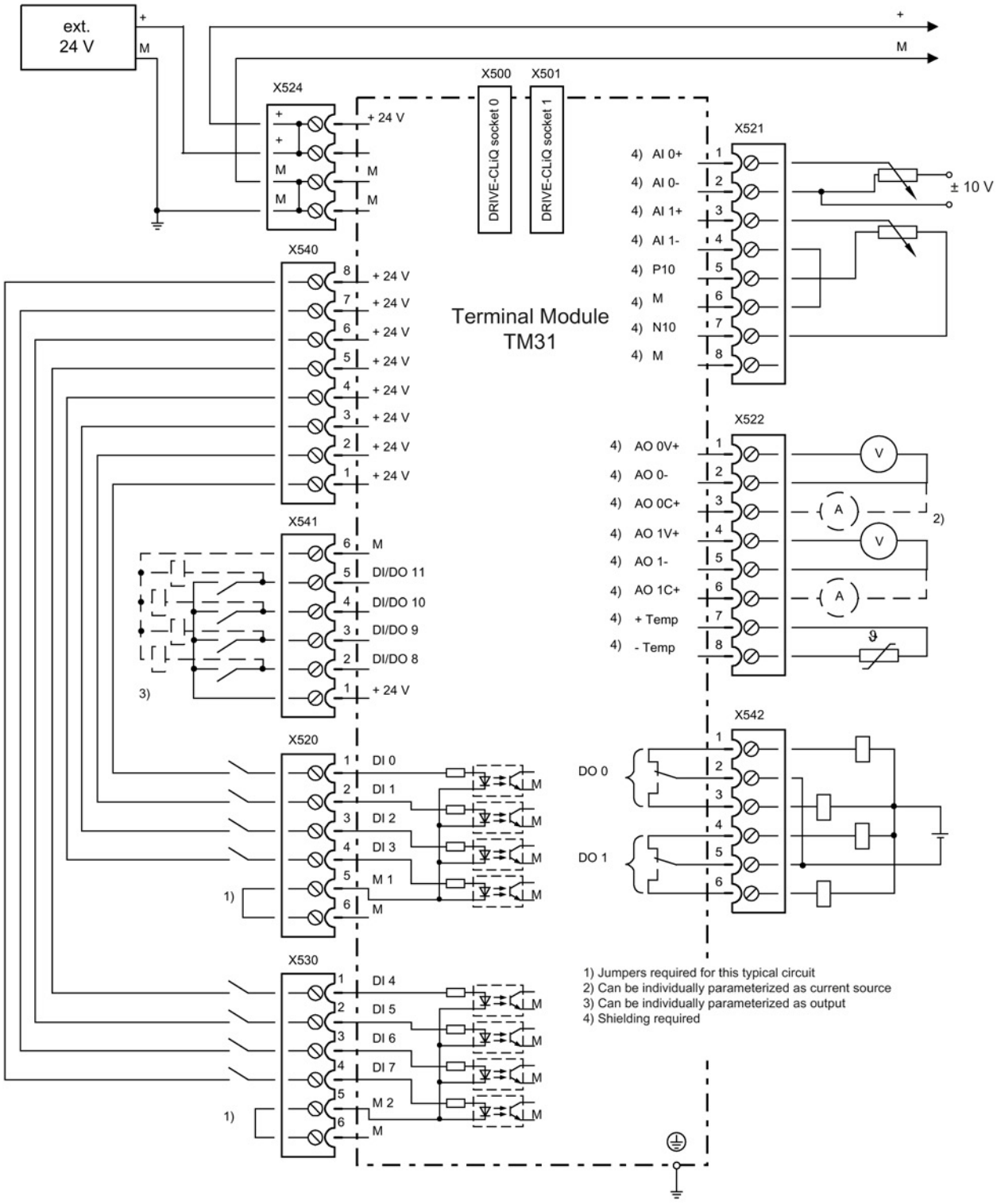

Figure 5-8 Connection example of TM31

5.3.4 Meaning of the LED

Table 5- 20 Meanings of the LEDs on the Terminal Module TM31

LED	Color	Status	Description, cause	Remedy
READY	-	Off	The electronics power supply is missing or outside the permissible tolerance range.	–
	Green	Continuous light	The component is ready for operation. Cyclic DRIVE-CLiQ communication is taking place.	–
	Orange	Continuous light	DRIVE-CLiQ communication is being established.	–
	Red	Continuous light	This component has at least one fault. **Note:** The LED is activated irrespective of whether the corresponding messages have been reconfigured.	Remove and acknowledge the fault.
	Green/ red	Flashing light 0.5 Hz	Firmware is being downloaded.	–
		Flashing light 2 Hz	Firmware download is complete. The system waits for POWER ON.	Carry out a POWER ON.
	Green/ orange or Red/ orange	Flashing light	Component recognition via LED is activated[1]. **Note:** Both options depend on the LED status when component recognition is activated.	–

[1] The parameters for activating component recognition using LEDs can be taken from the following reference:
Reference: /LH1/ SINAMICS S120/S150 List Manual

Cause and rectification of faults

Additional information about the cause and resolving faults can be taken from the following references:

- Reference:/LH1/SINAMICS S120/S150 List Manual
- Reference: /IH1/ SINAMICS S120 Commissioning Manual with STARTER

5.3.5 Dimension drawing

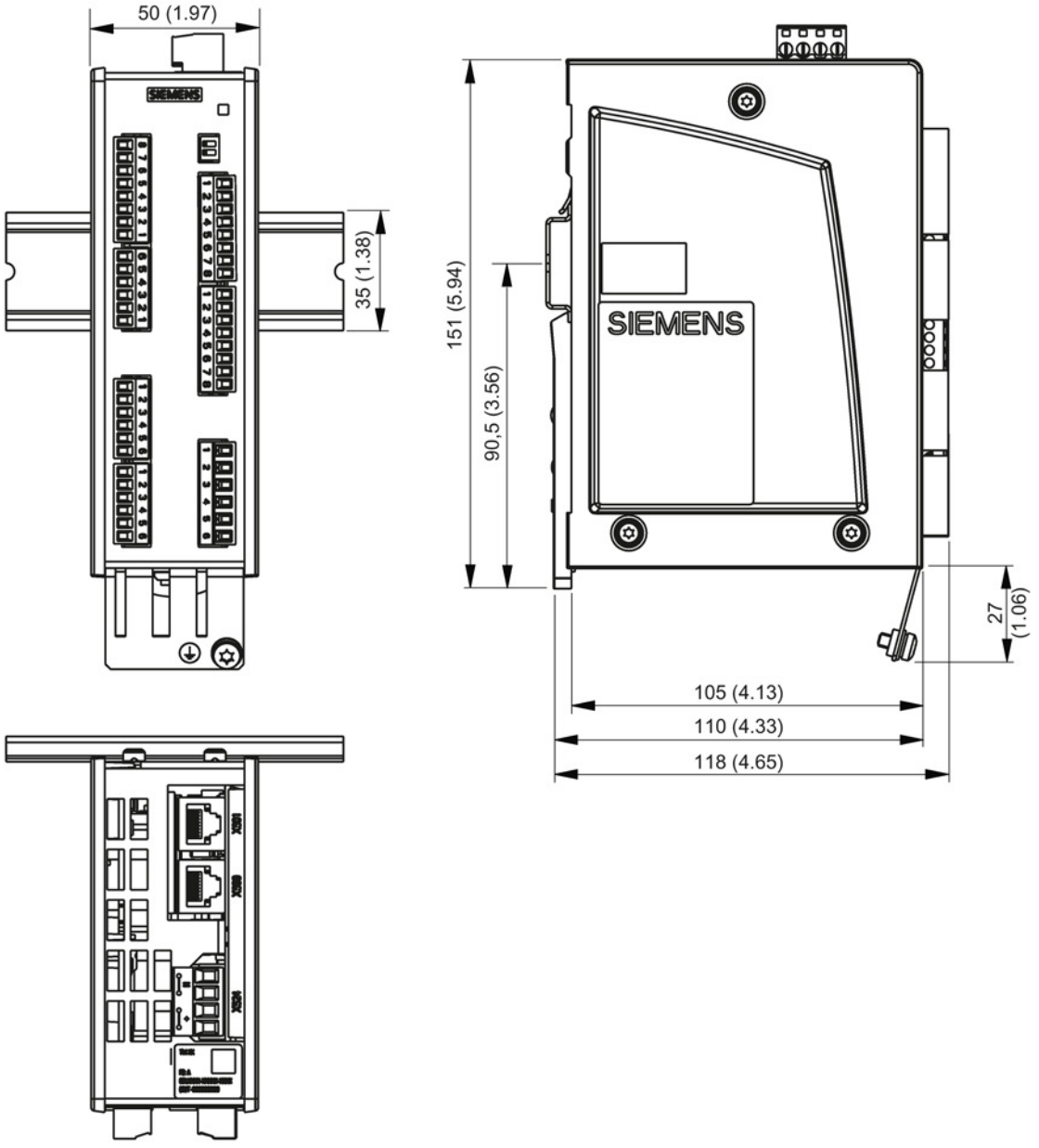

Figure 5-9 Dimension drawing of Terminal Module TM31, all data in mm and (inches)

5.3.6 Installation

Installation

1. Tilt the component backwards slightly and attach it to the DIN rail using the hooks.
2. Swivel the component onto the DIN rail until you hear the mounting slide at the rear latch into position.
3. Slide the components along the mounting rail to either the left or right up to their final position.

Removal

1. First shift the mounting slide downwards at the lug to release the interlocking with the mounting rail.
2. Swivel the component to the front and withdraw it upwards from the DIN rail.

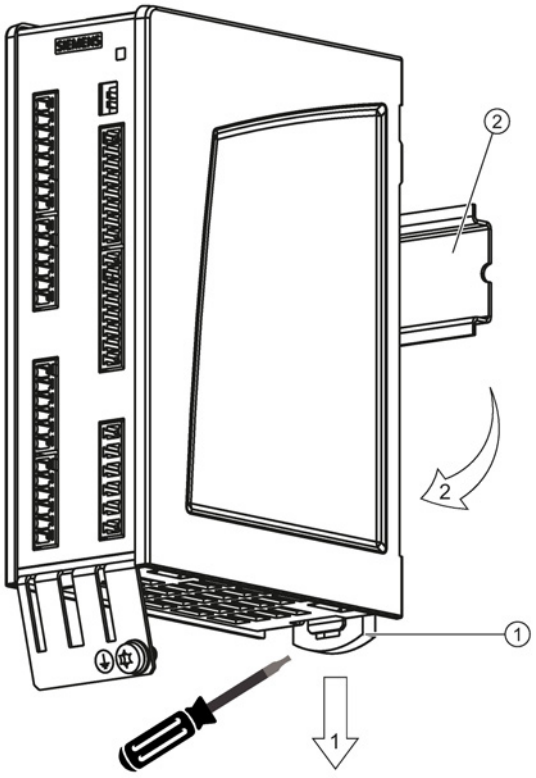

① Mounting slide
② Mounting rail

Figure 5-10 Removing from a DIN mounting rail

5.3.7 Protective conductor connection and shield support

It is always advisable to shield the digital input/output wiring.

The following diagram shows a typical Weidmüller shield connection clamp for the shield supports.

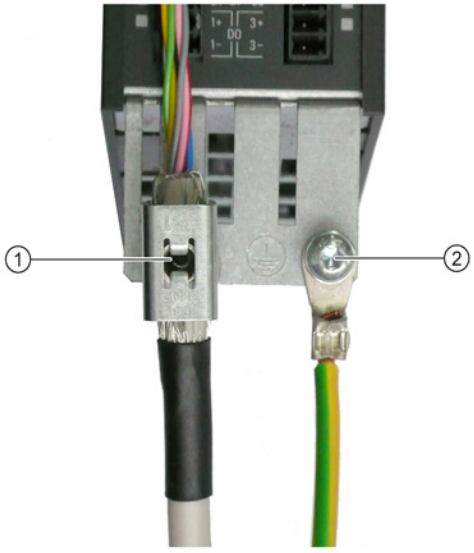

① Shield connection terminal, Weidmüller company, type: KLBUE CO1, Article number: 1753311001

② Protective conductor connection M4 / 1.8 Nm

Figure 5-11 Protective conductor connection and shield support

NOTICE
Damage or faulty operation due to incorrect shielding or inadmissible cable lengths If the correct shielding procedures or the permissible cable lengths are not observed, it can cause damage or the machine may malfunction. • Only use shielded cables. • Do not exceed the cable lengths stated in the technical data.

5.3.8 Connector coding

To ensure that identical connectors are assigned correctly on the TM31, the connecters are encoded as shown in the following diagram.

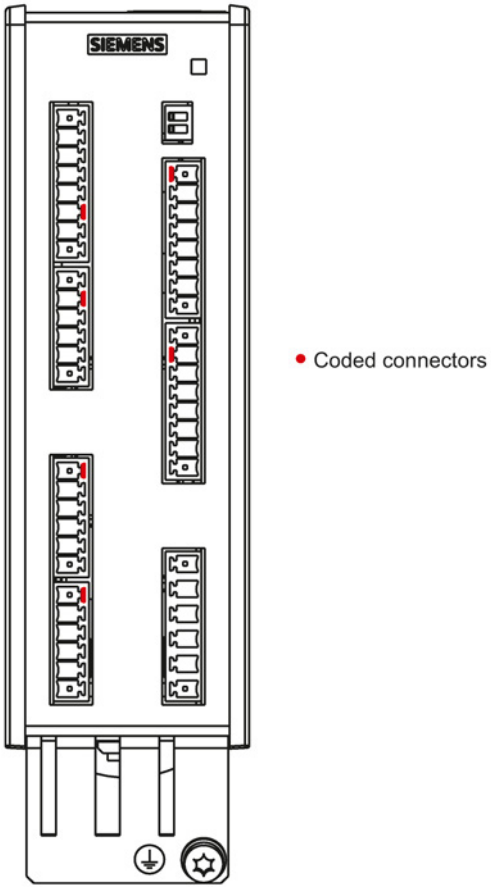

Figure 5-12 Example of connector coding at the TM31

The bending radii of the cables must be taken into account (see description of MOTION-CONNECT).

5.3.9 Technical data

Table 5- 21 Technical data

6SL3055-0AA00-3AA1	Unit	Value
Electronics power supply		
Voltage	V_{DC}	24 (20.4 … 28.8)
Current (without DRIVE-CLiQ and digital outputs)	A_{DC}	0.5
Power loss	W	< 10
Response time	The response time of the digital inputs/outputs and the analog inputs/outputs comprise the following: • Response time on the component itself (approx. 1/2 DRIVE-CLiQ cycle). • Transfer time via the DRIVE-CLiQ connection (approx. 1 DRIVE-CLiQ cycle). • Evaluation on the Control Unit (see function diagram). Additional information can be taken from the following references: Reference: /LH1/ SINAMICS S120/S150 List Manual, Chapter "Function diagrams/Terminal Module 31"	
PE/ground connection	At the housing with M4 screw	
Maximum cable lengths:		
electronics power supply	m	30
DRIVE-CLiQ cables	m	100
inputs/outputs	m	30
Weight	kg	0.49

5.4 Terminal Module TM41

5.4.1 Description

The Terminal Module TM41 is an expansion module that is snapped onto an EN 60715 standard mounting rail.
The encoder interface of the TM41 can be used to emulate an incremental encoder. The TM41 can also be used to connect analog controls to SINAMICS.

The TM41 contains the following interfaces:

Table 5- 22 Interface overview of the TM41

Type	Quantity
DRIVE-CLiQ interfaces	2
Digital inputs, floating	4
Bidirectional digital inputs/outputs	4
Analog inputs	1
TTL encoder output	1