MANUFACTURER DOCUMENT PACKAGE

Manufacturer's Manual

Reference package for procurement and maintenance review

ABB

SPAJ140C-CA

OVERCURRENT AND EARTH-FAULT RELAY

Used with the applicable SPACOM SPAJ 140 C Relays configuration.

REFERENCE PACKAGE

OFFICIAL DOCUMENT

Selected official manufacturer pages follow this cover.

Source: ABB SPAJ 140 C Product Guide 1MRS 750361-MBG, April 1999; pages 1-8 including CA ordering definition.

Combined overcurrent and earth-fault relay

SPAJ 140 C

1MRS 750361-MBG
Page 1
Issued: April 1999
Status: New
Data subject to change without notice



Features

- Three-phase, low-set phase overcurrent unit with definite time or inverse definite minimum time (IDMT) characteristic
- Three-phase, high-set phase overcurrent unit with instantaneous or definite time operation
- Low-set earth-fault unit with definite time or inverse definite minimum time (IDMT) characteristic
- High-set earth-fault unit with instantaneous or definite time operation
- Built-in circuit-breaker failure protection
- Two heavy-duty and four signal output relays
- Output relay matrix allowing start or trip signals from the protection stages to be routed to the desired output relay
- Local display of measured and set values and data recorded at the moment of a fault
- Reading and writing of setting values either via local display and front panel push-buttons or from higher-level systems over the serial interface and the fibre-optic bus
- Self-supervision system continuously monitoring the operation of the electronics and the microprocessor
- Powerful software support for parameterization of the relay, for reading measured and recorded values, events, etc., and for storing readings
- Member of the SPACOM product family, ABB's Distribution Automation system and ABB's Panorama concept
- CE marking according to the EC directive for EMC

Application

The combined overcurrent and earth-fault relay SPAJ 140 C is intended to be used for the selective short-circuit and earth-fault protection of radial feeders in solidly earthed, resistance earthed or impedance earthed power systems. The integrated protection relay includes an overcurrent unit and an earth-fault unit with flexible tripping and signalling facilities. The overcurrent and earth-fault relays can also be used for other applications requiring single-, two-, or three-phase overcurrent protection. The combined overcurrent and earth-fault relay includes a circuit-breaker failure protection unit.

The combined overcurrent and earth-fault relay SPAJ 140 C is part of ABB's Distribution Automation concept, which is a product segment of Panorama, the complete ABB solution for the control and management of electric power systems.

Design

The combined overcurrent and earth-fault relay is a secondary relay to be connected to the current transformers of the object to be protected. The three-phase overcurrent unit and the earth-fault unit continuously measure the phase currents and the neutral current of the object. On detection of a fault the relay starts, trips the circuit breaker, provides an alarm signal, records fault data, etc., in accordance with the requirements of the application and the relay configuration.

When the phase current exceeds the set start current of the low-set stage I>, the overcurrent unit starts and, after a preset start time, it delivers a start signal. When the set operate time, at definite time operation, or the calculated operate time, at inverse time operation, elapses, the overcurrent unit operates. In the same way, the high-set stage I>> of the overcurrent unit starts when the set start current is exceeded and delivers a start signal after the preset (~40 ms) start time. When the set operate time has elapsed, the overcurrent unit operates.

When the earth-fault current exceeds the set start current of the low-set stage I_0>, the earth-fault unit starts and, after a preset start time, it delivers a start signal. When the set operate time, at definite time operation, or the calculated operate time, at inverse time operation, elapses, the earth-fault unit operates. In the same way, the high-set stage I_0>> of the earth-fault unit starts, when the set start current is exceeded, and delivers a start signal after the preset (~50 ms) start time. Once the set operate time has elapsed, the earth-fault unit operates.

The low-set stage of the overcurrent unit and the low-set stage of the earth-fault unit may be given definite time or inverse definite minimum time (IDMT) characteristic. The IDMT characteristic includes six time/current curve sets. Four of the curve sets comply with the BS 142 and IEC 255 and are named “Normal inverse”, “Very inverse”, “Extremely inverse” and “Long-time inverse”. The two additional inverse time curve sets comply with ABB standards and are called “RI” and “RXIDG”.

By appropriate configuration of the output relay matrix, the start signals of the overcurrent and earth-fault units are obtained as contact functions. The start signals can be used for blocking co-operating protection relays, and for signalling.

The relay includes one external binary input, which is controlled by an external control voltage. The function of the control input is determined by a selector switch in the protection relay module. The control input can be used for blocking the operation of one or more protection stages, for resetting a latched output relay in the manual reset mode or for switching between main and second setting banks.

Data communication

The relay is provided with a serial interface on the rear panel. By means of a bus connection module type SPA-ZC 17 or SPA-ZC 21 the relay can be connected to the fibre-optic SPA bus. The bus connection module type SPA-ZC 21 is powered from the host relay, whereas the bus connection module SPA-ZC 17 is provided with a built-in power unit, which can be fed from an external secured power source. The relay communicates with higher-level data acquisition and control systems over the SPA bus.

Self-supervision

The relay incorporates a sophisticated self-supervision system with auto-diagnosis, which increases the availability of the relay and the reliability of the system. The self-supervision system continuously monitors the hardware and the software of the relay. The system also supervises the operation of the auxiliary supply module and the voltages generated by the module.

When a permanent internal relay fault is detected, the IRF indicator on the relay front panel is lit. At the same time the output relay of the self-supervision system operates and a fault message is transmitted to the higher-level system over the serial bus. Further, in most fault situations, a fault code is shown in the display of the protection relay module. The fault code indicates the type of the fault that has been detected.

Auxiliary supply voltage

The auxiliary supply of the relay is obtained from an internal plug-in type power supply module. Two auxiliary power module versions are available: type SPTU 240R1 for the supply voltage range 80…265 V ac/dc and type SPTU 48R1 for the supply voltage range 18…80 V dc. The power supply module forms the internal voltages required by the protection relay and the I/O module.

Technical data

Table 1: Energizing inputs, overcurrent unit

Terminals		1-3, 4-6, 7-9	1-2, 4-5, 7-8
Rated current I_n		1 A	5 A
Thermal withstand capability	continuously	4 A	20 A
	for 10 s	25 A	100 A
	for 1 s	100 A	500 A
Dynamic current withstand capability	Half-wave value	250 A	1250 A
Input impedance		<100 mΩ	<20 mΩ
Rated frequency f_n, according to order		50 Hz or 60 Hz	

Table 2: Energizing inputs, earth-fault unit

Terminals		25-26	25-27
Rated current I_n		1 A	5 A
Thermal withstand capability	continuously	4 A	20 A
	for 10 s	25 A	100 A
	for 1 s	100 A	500 A
Dynamic current withstand capability	Half-wave value	250 A	1250 A
Input impedance		<100 mΩ	<20 mΩ
Rated frequency f_n, according to order		50 Hz or 60 Hz	

Table 3: Output contact ratings

Type of contact		Tripping	Signalling
Terminals		65-66, 74-75	70-71-72, 68-69, 77-78, 80-81
Rated voltage		250 V ac/dc	
Continuous carry		5 A	5 A
Make and carry for 0.5 s		30 A	10 A
Make and carry for 3 s		15 A	8 A
Breaking capacity for dc, when the control/ signalling circuit time constant L/R ≤ 40 ms, at the control voltages	220 V dc	1 A	0.15 A
	110 V dc	3 A	0.25 A
	48 V dc	5 A	1 A
Contact material		$AgCdO_2$	

Technical data (cont'd)

Table 4: Control input, communication and power supply

External control input	Terminals		10-11
	Control voltage level		18…265 V dc or 80…265 V ac
	Current drain at activated input		2…20 mA
Data communication	Transmission mode		Fibre-optic serial bus
	Data code		ASCII
	Selectable data transfer rates		4800 or 9600 Bd
	Bus connection module, powered from the host relay	for plastic core cables	SPA-ZC 21BB
		for glass fibre cables	SPA-ZC 21MM
	Bus connection module, powered from the host relay or from an external power source	for plastic core cables	SPA-ZC 17BB
		for glass fibre cables	SPA-ZC 17MM
Auxiliary supply modules	Power supply and I/O modules, rated voltages and operative range	SPTU 240R1	110/120/230/240 V ac, 110/125/220 V dc, 80…265 V ac/dc
		SPTU 48R1	24/48/60 V dc, 18…80 V dc
	Power consumption	under quiescent conditions	~4 W
		under operating conditions	~6 W

Table 5: Relay module SPCJ 4D29, overcurrent unit

Features		Stage I>	Stage I>>
Start current	at definite time	0.5…5.0 × I_n	0.5…40.0 × I_n and ∞
	at inverse time	0.5…2.5 × I_n	–
Start time, typically		50 ms	40 ms
Operate time at definite time characteristic		0.05…300 s	0.04…300 s
Time/current characteristic at inverse mode		Extremely inverse Very inverse Normal inverse Long-time inverse RI type inverse RXIDG type inverse	–
Time multiplier k		0.05…1.0	–
Reset time, typically		40 ms	40 ms
Retardation time		<30 ms	
Reset ratio, typically		0.96	
Operate time accuracy at definite time mode		±2% of set value or ±25 ms	
Accuracy class index E at inverse time mode		5	–
Operation accuracy		±3% of set value	±3% of set value

Table 6: Relay module SPCJ 4D29, earth-fault unit

Features	Stage I_0>	Stage I_0>>
Start current	0.1…0.8 × I_n	0.1…10.0 × I_n and ∞
Start time, typically	60 ms	40 ms
Operate time at definite time characteristic	0.05…300 s	0.05…300 s
Time/current characteristic at inverse time mode	Extremely inverse Very inverse Normal inverse Long-time inverse RI type inverse RXIDG type inverse	–
Time multiplier k	0.05…1.0	–
Reset time, typically	40 ms	40 ms
Retardation time	<30 ms	–
Reset ratio, typically	0.96	0.96
Operate time accuracy at definite time mode	±2% of set value or ±25 ms	
Accuracy class index E at inverse time mode	5	–
Operation accuracy	±3% of set value	±3% of set value

Table 7: Tests and standards

Test voltages	Dielectric test voltage (IEC 255-5)	2.0 kV, 50 Hz, 1 min
	Impulse test voltage (IEC 255-5)	5 kV, 1.2/50 µs, 0.5 J
	Insulation resistance (IEC 255-5)	>100 MΩ, 500 V dc
Interference tests	High-frequency (1 MHz) disturbance test (IEC 255-22-1), common mode	2.5 kV
	High-frequency (1 MHz) disturbance test (IEC 255-22-1), differential mode	1.0 kV
	Fast transients (IEC 255-22-4, class III and IEC 801-4, level 4), power supply inputs	4 kV, 5/50 ns
	Fast transients (IEC 255-22-4, class III and IEC 801-4, level 4), other inputs	2 kV, 5/50 ns
	Electrostatic discharge (IEC 255-22-2 and IEC 801-2, class III), air discharge	8 kV
	Electrostatic discharge (IEC 255-22-2 and IEC 801-2, class III), contact discharge	6 kV
	RF electromagnetic field test (IEC 1000-4-3 and ENV 50140)	10 V/m, f = 80…1000 MHz
	Conducted RF disturbance test (IEC 1000-4-6 and ENV 50141)	10 V, f = 150 kHz…80 MHz
Power supply test, power supply variation	Variation voltage	68…265 V
	Interruption 80 V - 50%	0…200 ms
	Interruption 80 V - 100%	0…30 ms
	Interruption 255 V - 100%	0…160 ms

Block diagram (cont'd)

Table 7: Tests and standards

Mechanical test	Seismic test (ANSI/IEEE C37.98-1987), operating basis earthquake test	0.5…5.25 g
	Seismic test (ANSI/IEEE C37.98-1987), safe shut down earthquake test	0.5…7.5 g
	Vibration test	2…13.2 Hz, ±1.0 mm 13.2…100 Hz, ±0.7 g
	Shock/bump test (IEC 255-21-2)	20 g, 1000 bumps/direction
	Corrosion test	Battelle test
Environmental conditions	Service temperature range	-10…+55°C
	Transport and storage temperature range (IEC 68-2-8)	-40…+70°C
	Damp heat test (IEC 68-2-3)	<95%, +40°C, 96 h
	Degree of protection by enclosure when panel mounted	IP 54
	Weight	~3.5 kg

Block diagram

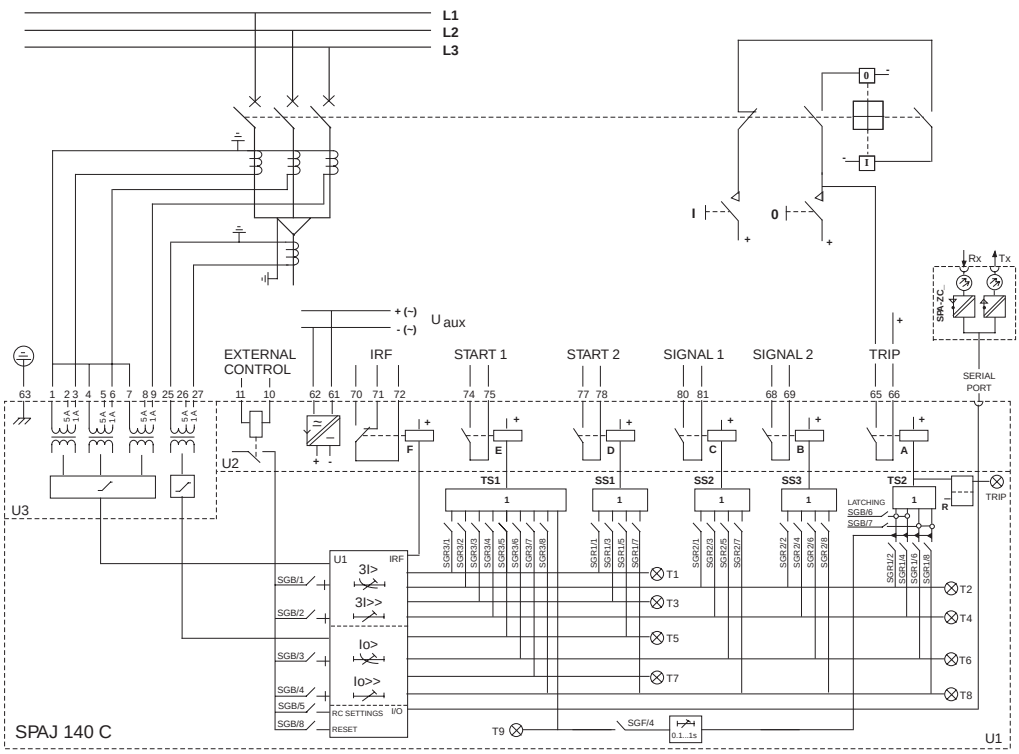

Fig. 1 Block diagram and sample connection diagram

Mounting and dimensions

Flush mounting

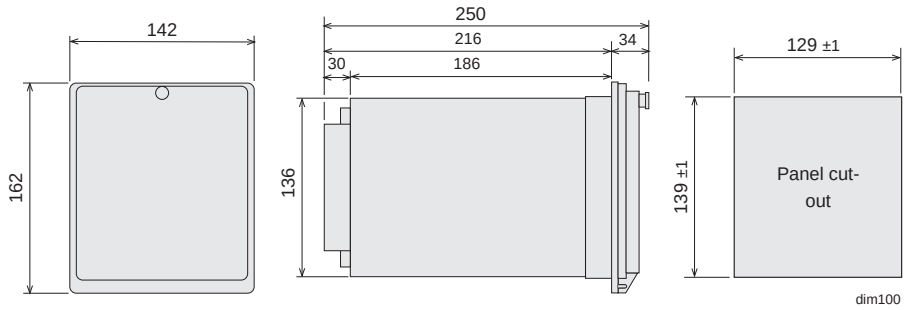

Fig. 2 Flush-mounting relay case (dimensions in mm)

Semi-flush mounting

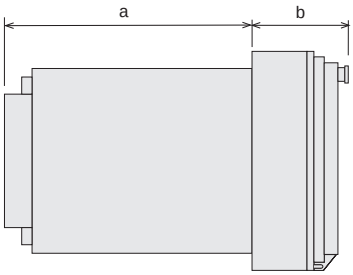

Raising frame	a	b
SPA-ZX 111	176	74
SPA-ZX 112	136	114
SPA-ZX 113	96	154

Fig. 3 Semi-flush mounting relay case (dimensions in mm)

Mounting in 19 inch cabinets and frames

An ancillary mounting plate, height 4U (~177 mm), is recommended to be used when the protection relays are to be mounted in 19 inch frames or cabinets. The ancillary mounting plate type SPA-ZX 104 accommodates three relays, type SPA-ZX 105 two relays and type SPA-ZX 106 one relay.

Projecting mounting

When projecting mounting is preferred, a relay case type SPA-ZX 110 is used. The relay case for projecting mounting is provided with front connectors.

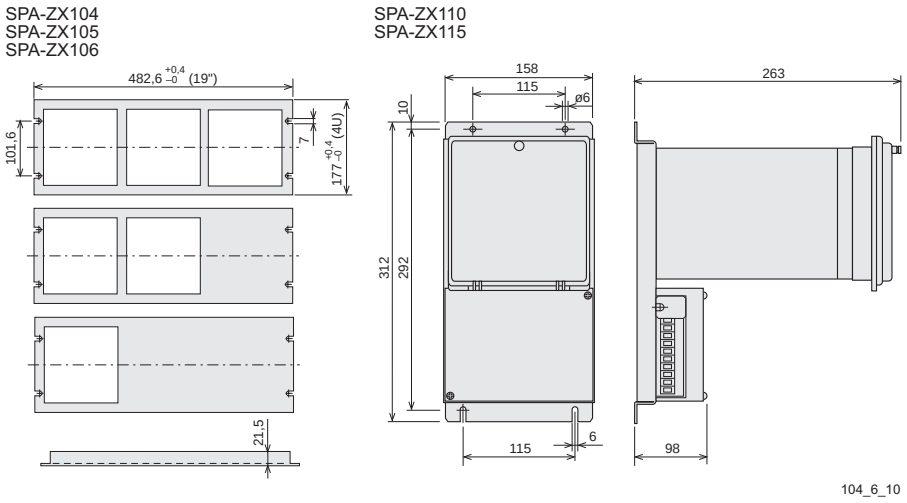

Fig. 4 Mounting cabinets and frames as well as projecting mounting (dimensions in mm)

Ordering

When ordering, please specify:

Ordering information	Ordering example
1. Type designation and quantity	SPAJ 140 C, 5 pieces
2. Order number	RS 611 006-AA
3. Rated values	I_n=5 A, f_n=50 Hz
4. Auxiliary voltage	U_{aux} =110 V dc
5. Accessories	-
6. Special requirements	-

Order numbers

Combined overcurrent and earth-fault relay SPAJ 140 C without test adapter	RS 611 006-AA, CA, DA, FA
Combined overcurrent and earth-fault relay SPAJ 140 C including test adapter RTXP 18	RS 611 206-AA, CA, DA, FA
The last two letters of the order number indicate the rated frequency f_n and the auxiliary voltage U_{aux} of the relay as follows:	AA equals f_n = 50 Hz and U_{aux} = 80…265 V ac/dc
	CA equals f_n = 50 Hz and U_{aux} = 18…80 V dc
	DA equals f_n = 60 Hz and U_{aux} = 80…265 V ac/dc
	FA equals f_n = 60 Hz and U_{aux} = 18…80 V dc

References

Additional information

Brochure “Combined overcurrent and earth-fault relays”	1MRS 750190-MDS EN
User’s manual and technical description “Combined overcurrent and earth-fault relay SPAJ 140 C”	1MRS 750629-MUM EN

ABB Substation Automation Oy
P.O. Box 699
FIN-65101 Vaasa
Finland
Telephone: +358 10 224 000
Fax: +358 10 224 1094