MANUFACTURER DOCUMENT PACKAGE

Manufacturer's Manual

Reference package for procurement and maintenance review

ABB

AINT-14C 68685826

MAIN CIRCUIT INTERFACE BOARD

Used with the applicable ACS800 main-circuit interface configuration.

REFERENCE PACKAGE

OFFICIAL DOCUMENT

Selected official manufacturer pages follow this cover.

Source: ABB ACS800-67 Hardware Manual, pages 29, 36 and 86; AINT-14C layout and interface status.

Converter module layout is presented in the following drawing.

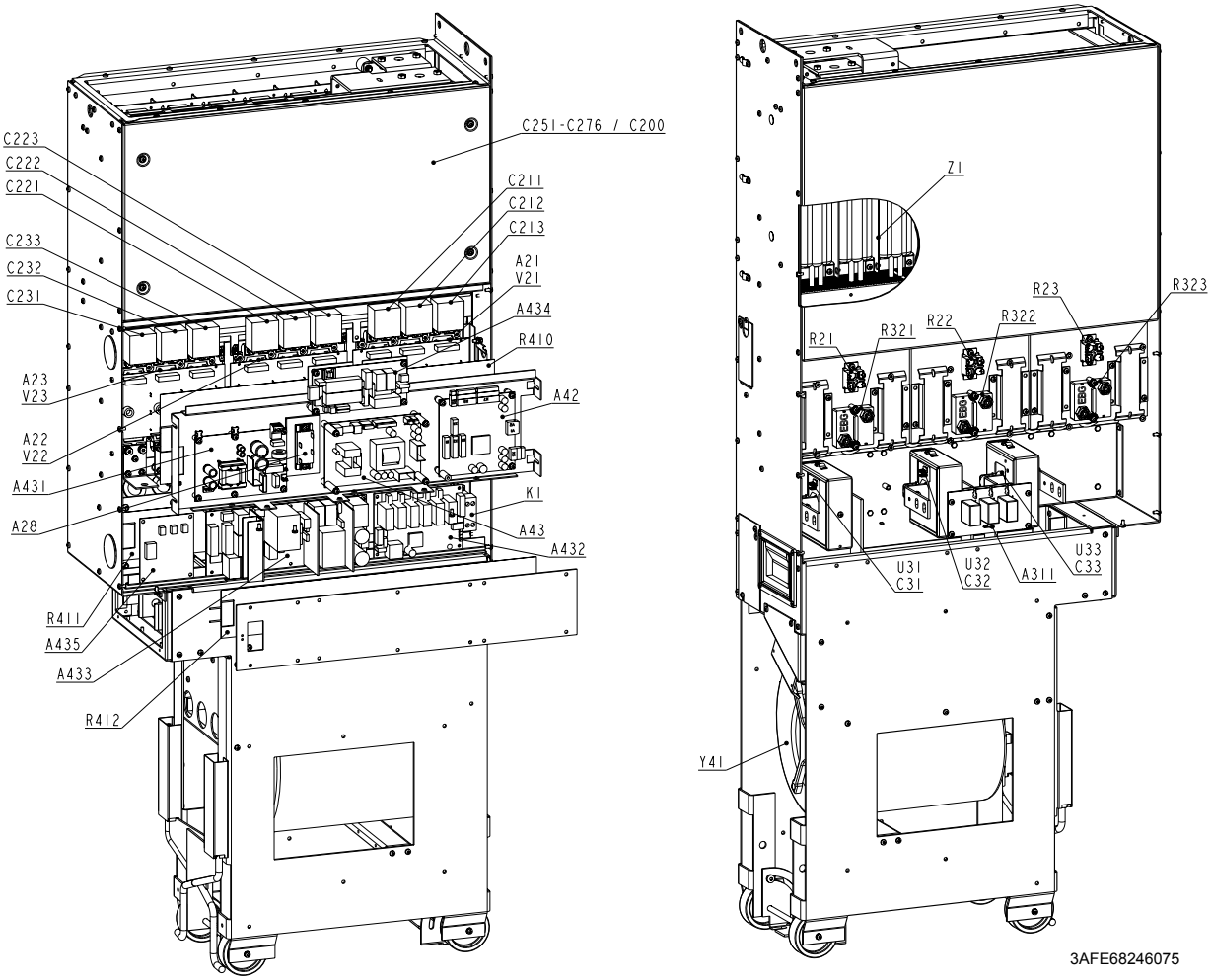

A21-23	AGDR-6x/7x Gate Driver Board (A23 is not used with 400 kVA units)	A433	AFPS-11C Fan Power Supply 1 kW	V21-23	IGBT module (V23 is not used with 400 kVA units)
A28*	AFCB-01 Protection board or NRED-16	A435	AHCB-01C Heating Control Board	R21-23	Discharging resistor
A42	AINT-14C Main Circuit Interface Board	C31-33	Filter capacitor set	R321-323	Output filter resistor
A43*	APOW-11C/01 Power Supply Board	C200	DC link capacitor (C251-276 are not used)	R410-413	Heating element
A46	AGBB-01C Gate Driver Branching Board (only with 400 kVA units)	C211-213	Clamp capacitor	U31-33	Current transducer
A311	AOFC-02 Output Filter Board	C221-223	Clamp capacitor	Y41	Fan
A432	AFIN-01C Fan Inverter 1 kW	C231-233	Clamp capacitor	Z1	AOFI-61 Output Filter Inductor

* Allowed combinations are:
NRED-16 and APOW-01
AFCB-01 and APOW-11C

Interboard connection diagram

The diagram below shows the principal interboard optical connections of the converter. For details, see the circuit diagrams delivered with the converter.

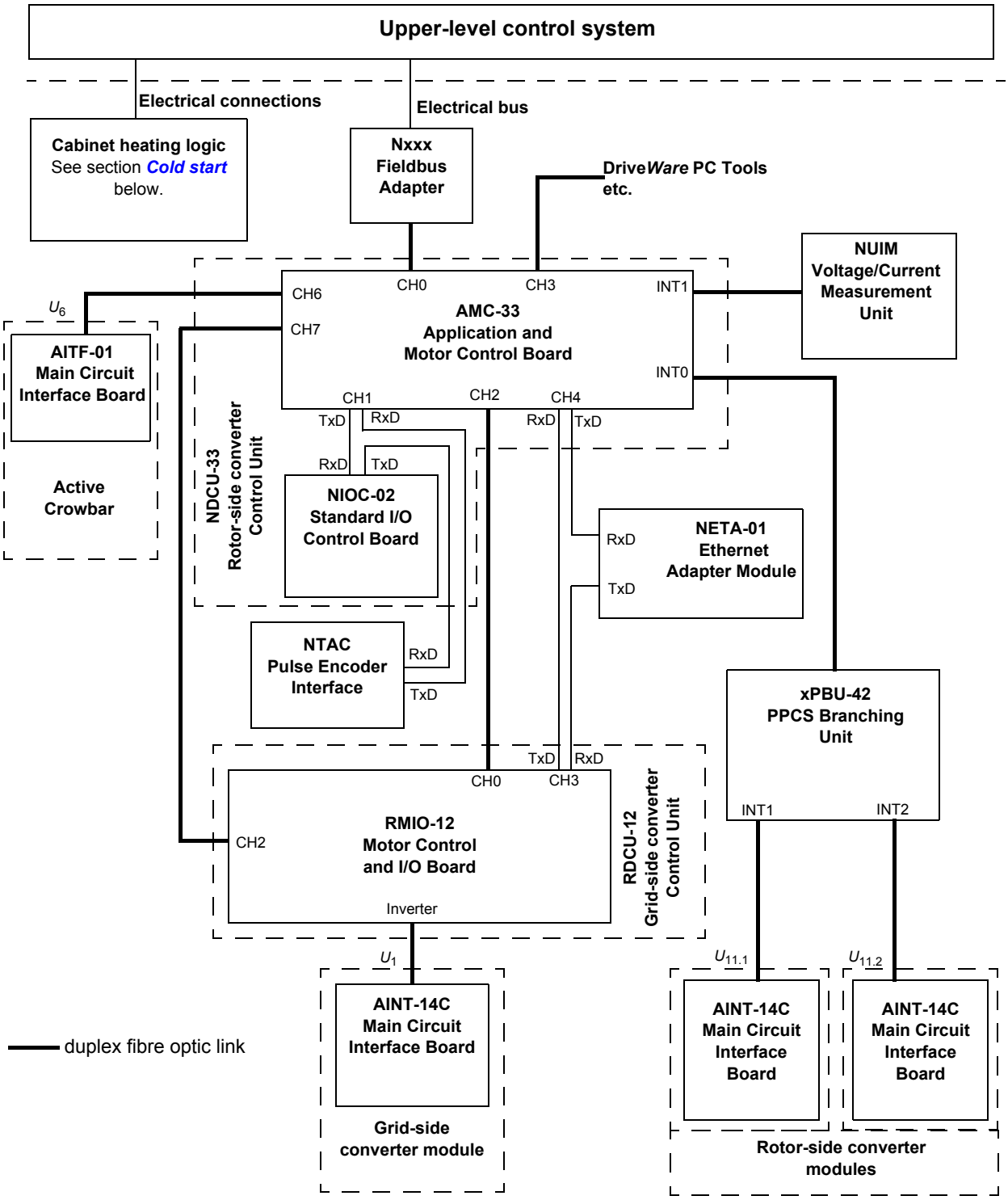

Capacitors

The converter modules employ several film capacitors. The lifespan depends on the operating time of the converter, loading and ambient temperature. Capacitor life can be prolonged by lowering the ambient temperature.

It is not possible to predict capacitor failure. Capacitor failure is usually followed by damage to the unit and an input cable fuse failure, or a fault trip. Contact ABB if capacitor failure is suspected.

Capacitor replacement

Contact an ABB service representative.

Other maintenance actions

Power module replacement

To replace converter modules, follow the instructions on module removal and refitting given in section *Connection procedure* in chapter *Electrical installation*.

LEDs

This table describes the LEDs.

Location	LED	When LED is lit
RMIO-12		
V30	Red	Converter in fault state
V22	Green	The 5 V power supply on the board is OK.
Control panel mounting platform		
	Red	Converter in fault state
	Green	The main 24 VDC power supply for the control panel and the RMIO board is OK.
AINT-14		
V203	Green	The 5 V power supply on the board is OK.
V309	Green	Converter operation is enabled.
V310	Red	Prevention of unexpected start is ON.
V311	Green	The 24 V power supply for the gate drivers is OK.
AITF-01C*		
V203	Green	The 5 V power supply on the board is OK.
V309	Green	Converter operation is enabled.
V310	Red	Prevention of unexpected start is ON.
V311	Green	The 24 V power supply for the gate drivers is OK.
AFIN-01		
V13	Green	The 5 V power supply on the board is OK.
V14	Green	The converter is running.
V15	Yellow	Motor thermal switch is active (open).
V16	Red	Motor overcurrent
APOW-11		
V16	Green	The 24 V output voltage is ON.