MANUFACTURER DOCUMENT PACKAGE

Manufacturer's Manual

Reference package for procurement and maintenance review

SIEMENS

6ES7134-4MB02-0AB0

HIGH FEATURE CURRENT INPUT

Used with the applicable SIMATIC ET 200S 2AI I 2/4WIRE HF configuration.

REFERENCE PACKAGE

OFFICIAL DOCUMENT

Selected official manufacturer pages follow this cover.

Source: Siemens 2 AI I 2/4WIRE HF Manual A5E01076111-01, April 2007, exact module properties, parameters and connections.

Properties

1

1.1 2AI 2/4WIRE HF analog electronic module (6ES7134-4MB02-0AB0)

Properties

- 2 inputs for measuring current
- Input ranges:
  - ± 20 mA, resolution 15 bits + sign
  - 4 mA to 20 mA, resolution 15 bits
- Isolated from the load voltage L+
- Permitted common-mode voltage between the channels 100 VAC
- Supports two-wire or four-wire measuring transducers
- Supports isochronous operation
  - Minimum time for the isochronous DP cycle (T_{DPmin}): 0.7 ms
  - Minimum conversion time of the input modules: (T_{WEmin}): 0.5 ms
- Supports I&M functions
- Extended temperature range from 0 to 50°C with vertical installation

General terminal assignment

Note

Terminals 4, 8, A4, A8, A3 and A7 are only available at specified terminal modules.

Terminal assignment for the 2 AI I 2/4WIRE HF (6ES7134-4MB02-0AB0)				
Terminal	**Assignment**	**Terminal**	**Assignment**	**Notes**
1	M_{0+}	**5**	M_{1+}	**for 2-wire transducer:** • M_{n+}: Input signal "-", Channel n • M_{n-}: Connect to L- • L+: Input signal "+", Channel n • AUX1: Protective-conductor terminal or potential bus (freely usable up to 230 VAC) **For 4-wire transducer:** • M_{n+}: Input signal "+", Channel n • M_{n-}: Input signal "-", Channel n • L+: Power supply for four-wire measuring transducer • L-: Return circuit for measuring transducer supply • AUX1: Protective-conductor terminal or potential bus (freely usable up to 230 VAC)
2	M_{0-}	**6**	M_{1-}	
3	L+	**7**	L+	
4	L-	**8**	L-	
A4	AUX1	**A8**	AUX1	
A3	AUX1	**A7**	AUX1	

Usable terminal modules

Usable terminal modules for the 2 AI I 2/4WIRE HF (6ES7134-4MB02-0AB0)		
TM-E15C26-A1 (6ES7193-4CA50-0AA0)	TM-E15C24-01 (6ES7193-4CB30-0AA0)	← Spring terminal
TM-E15S26-A1 (6ES7193-4CA40-0AA0)	TM-E15S24-01 (6ES7193-4CB20-0AA0)	← Screw-type terminal
TM-E15N26-A1 (6ES7193-4CA80-0AA0)	TM-E15N24-01 (6ES7193-4CB70-0AA0)	← Fast Connect
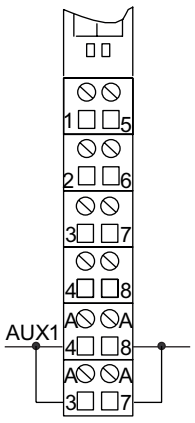	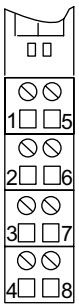	Wiring examples 2-wire 2-wire transducer M + mA M- L+ L- 4-wire 4-wire transducer mA

Block diagram

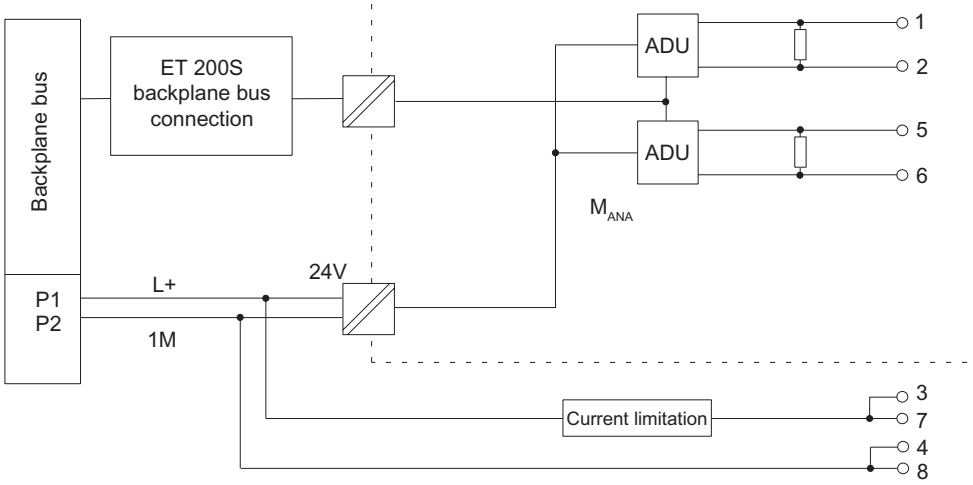

Figure 1-1 Block diagram of the 2AI I 2/4WIRE HF

2 AI I 2/4WIRE HF (6ES7134-4MB02-0AB0) technical data

Dimensions and weight	
Width (mm)	15
Weight	Approx. 45 g
Module-specific data	
Supports isochronous operation [1]	Yes
Supports I&M functions	Yes
Number of inputs	2
Cable length	
• Shielded	Max. 200 m
Parameter length	12 bytes
Address space	4 bytes
Analog value representation	S5 and S7 format
[1] Supported if no interference frequency suppression or smoothing is configured.	
Voltages, currents, potentials	
Rated load voltage L+ (from the power module)	24 VDC
• Reverse polarity protection	Yes
Power supply of the transducers	Yes
• Short-circuit protection	Yes, 60 mA (for both channels)
Electrical isolation	
• Between the channels and backplane bus	Yes
• Between the modules and load voltage L+	No, with 2WIRE Yes, with 4WIRE
• Between the channels	No

Permissible potential difference			
• Between channels (U_{CM})	140 VDC/100 VAC (with isolated power supply for the measuring transducer)		
• Between M_{ANA} and the central grounding point (U_{ISO})	75 V DC/60 V AC		
• Insulation tested	500 VDC		
• Current consumption			
• From the load voltage L+ (no encoder supply)	Max. 48 mA		
Power dissipation of the module	Typically 1.2 W		
Status, interrupts, diagnostics			
Diagnostics function			
• Group error	Red "SF" LED		
• Diagnostic functions readable	Yes		
• Process interrupts [2]	Configurable, violation of upper and lower limits		
[2] Process interrupts are only sent if the process interrupt mechanism is not overloaded.			
Analog value generation			
Measuring principle	Sigma-Delta		
Conversion and cycle time:			
Integration time can be assigned parameters	Yes		
• Interference frequency suppression in Hz	60	50	No
• Conversion time in ms (per channel)	17	20	0,04
• Cycle time of the module in ms (per module)	18	21	0,5
• Resolution	±20 mA/15 bits + sign 4 to 20 mA/15 bits		
Suppression of interference, limits of error			
Noise suppression for f = n x (f1 ± 0.5%), (f1 = interference frequency)			
• Common-mode interference (U_{SS}) • Series-mode interference (peak interference value < rated value of input range)	Min. 100 dB Min. 90 dB		
Crosstalk between the inputs	Min. -100 dB		
Operational limit (in the entire temperature range, with reference to the input range)	±0.1% with interference frequency suppression ±0.2% without interference frequency suppression		
Intrinsic error limit (operational limit at 25°C)	±0.05% with interference frequency suppression ±0.1% with interference frequency suppression		
Temperature error (with reference to the input range)	± 0.003 %/K		
Linearity error (with reference to the input range)	± 0,01 %		
Repeatability (in steady state at 25°C with reference to input range)	± 0,01 %		

Data for selecting a sensor		
Input range (rated value)/input resistance		
• Current	Approx. 44 Ω	
Permitted input current (destruction limit)	Approx. 50 mA (can be limited electronically)	
Load of the two-wire transmitter:	Max. 750 Ω	
Smoothing of the measured values	Yes, can be assigned parameters in 4 steps by means of digital filtering	
	Step	**Time constant**
	None	1 x cycle time
	Weak	4 x cycle time
	Medium	16 x cycle time
	Strong	32 x cycle time

I&M functions

The I&M data can be read from the module using interface modules with the following order numbers or firmware/product versions (or higher):

Interface module	Order number	Firmware version	Product version
IM151-1 HIGH FEATURE	6ES7151-1BA01-0AB0	V2.0	02
IM151-3 PN	6ES7151-3AA20-0AB0	V4.0	01
IM151-3 PN HIGH FEATURE	6ES7151-3AA20-0AB0	V4.0	01
IM151-3 PN FO	6ES7151-3BB21-0AB0	V4.0	01

Parameters

2

2.1 Parameters

Table 2-1 Parameters for analog input module

2AI I 2/4WIRE HF	Range of values	Default setting	Applicability
Group diagnostics (parameter assignment error, internal error)	• Disable • Enable	Disable	Module
Diagnostics: Overflow/underflow	• Disable • Enable	Disable	Module
Diagnostics: Wire break[1]	• Disable • Enable	Disable	Channel
Smoothing [2]	• None • Weak • Medium • Strong	None	Channel
Type/range of measurement	• Deactivated • 4 to 20 mA, 2-wire transmitter • 4 to 20 mA, 4-wire transmitter • ± 20 mA	4 to 20 mA, 4-wire transmitter	Channel
Interference frequency suppression[2]	• Disable • Enable	Disable	Module
[1] Only in the measuring range 4 to 20 mA [2] Not with isochronous mode			

2.2 Parameter description

Smoothing

The individual measured values are smoothed by digital filtering. The smoothing can be adjusted in four steps, in which the smoothing factor k multiplied with cycle time of the electronic module equals the time constant of the smoothing filter. The greater the smoothing, the greater the time constant of the filter.

The following diagrams show the step response with the various smoothing factors in relation to the number of module cycles.

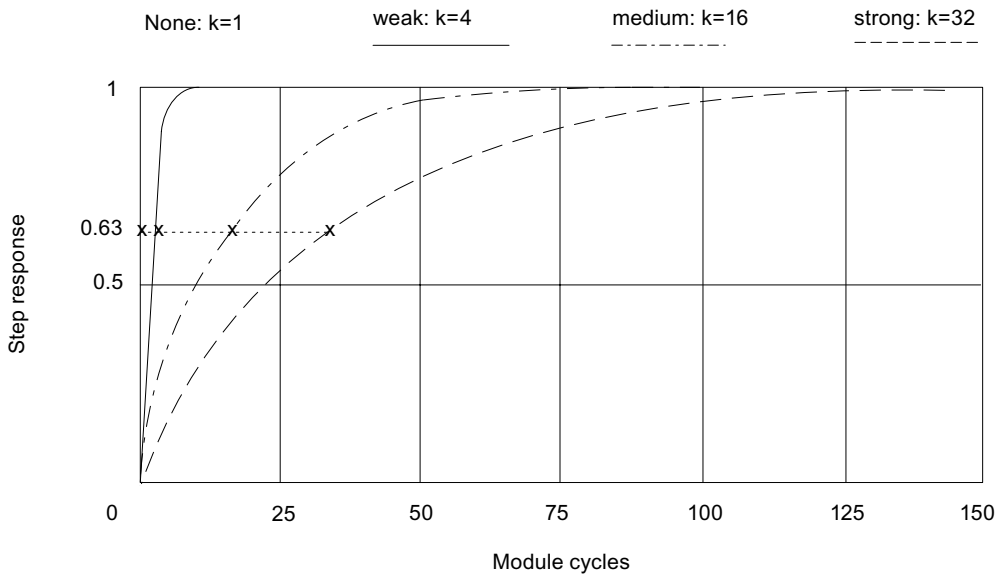

Interference frequency suppression

The 2 AI I 2/4WIRE HF analog input module supports the setting of interference frequency suppression (50 Hz or 60 Hz) on the interface module. This analog input module (HIGH FEATURE) also enables the interference frequency suppression to be disabled; i.e., this setting can be ignored on the interface module. Disabling interference suppression improves the conversion and cycle times in these modules.

Diagnostics

3

3.1 Diagnostics using LED display

LED display

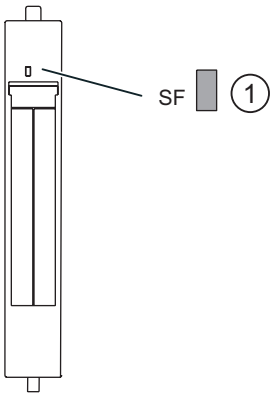

① Batch error (red)

Status and error displays

Event (LED)	Cause	Remedy
SF		
On	No configuration or incorrect module plugged in. No load voltage.present There is a diagnostic message.	Check the parameter assignment. Check the load voltage. Evaluate the diagnostics.

3.2 Error types

Analog input module error types

Table 3-1 Error types

Error type		Meaning	Remedy
16_D	10000: Parameter assignment error	Module cannot use the parameter for the channel: Inserted module does not match the one configured. Incorrect parameter assignment.	Correct the configuration (align actual and set configuration). Correct the parameter assignment (wire break diagnostics only parameterized for the permitted measuring ranges).
9_D	01001: Error	Internal module error (diagnostic message at channel 0 applies to the entire module)	Replace the module.
7_D	00111: Upper limit exceeded	Value is above the overshoot range.	Correct the module/final controlling element tuning.
8_D	01000: Lower limit value undershot	Value is below the underrange.	Correct the module/final controlling element tuning.
6_D	00110: Open circuit	Line to the encoder interrupted.	Correct the process wiring.

Analog value representation

4

4.1 Introduction

Electronic modules with analog outputs

With the electronic module with analog inputs, continuously variable signals, such as those occurring in temperature measurement and resistance measurement, can be acquired, evaluated, and converted to digital values for further processing.

4.2 Analog value representation for measuring range with SIMATIC S7

Analog value representation

With the same nominal range, the digitized analog value is the same for input and output values. Analog values are represented in two's complement.

The following table shows the analog value representation of the analog electronic modules.

Table 4-1 Analog value representation (SIMATIC S7 format)

Resolution	Analog value															
Bit number	15	14	13	12	11	10	9	8	7	6	5	4	3	2	1	0
Significance of the bits	S	2^{14}	2^{13}	2^{12}	2^{11}	2^{10}	2^{9}	2^{8}	2^{7}	2^{6}	2^{5}	2^{4}	2^{3}	2^{2}	2^{1}	2^{0}

Sign

The sign (S) of the analog value is always in bit number 15:

- "0" → +
- "1" → –

Output value

The following table shows the representation of the binary analog values and the corresponding decimal and hexadecimal representation of the units of the analog values.

The table below shows the resolutions 11, 12, 13, and 15 bit + sign. Each analog value is entered left aligned in the ACCU. The bits marked with "x" are set to "0".

Table 4-2 Output values (SIMATIC S7 format)

Resolution in bits	Units		Analog value	
	Decimal	Hexadecimal	High byte	Low byte
11+S	16	10_H	S 0 0 0 0 0 0 0	0 0 1 x x x x
12+S	8	8_H	S 0 0 0 0 0 0 0	0 0 0 1 x x x
13+S	4	4_H	S 0 0 0 0 0 0 0	0 0 0 0 1 x x
15 + sign	1	1_H	S 0 0 0 0 0 0 0	0 0 0 0 0 0 1

4.3 Measuring ranges

Introduction

The following tables contain the digitized analog values for the measuring ranges of the analog input modules.

Since the binary representation of the analog values is always the same, these tables only compare the measuring ranges with the units.

Measuring ranges for voltage and current: 4 to 20 mA

Table 4-3 SIMATIC S7 format: Measuring range 4 to 20 mA

Measuring range 4 to 20 mA	Units		Range
	Decimal	Hexadecimal	
> 22,8142	32767	$7FFF_H$	Overflow
22,8142 : 20,0005	32511 : 27649	$7EFF_H$: $6C01_H$	Overshoot range
20,0000 16,0000 : 4,0000	27648 20736 : 0	$6C00_H$ 5100_H : 0_H	Nominal range
3,9995 . 1,1852	-1 : -4864	$FFFF_H$: $ED00_H$	Underrange
< 1,1852	-32768	8000_H	Underflow

Current measuring range: ± 20 mA

Table 4-4 SIMATIC S7 format: Measuring range ± 20 mA

Measuring range ± 20 mA	Units		Range
	Decimal	Hexadecimal	
> 23,5150	32767	$7FFF_H$	Overflow
23,5150 : 20,0007	32511 : 27649	$7EFF_H$: $6C01_H$	Overshoot range
20,0000 14,9980 : -14,9980 -20,0000	27648 20736 : -20736 -27648	$6C00_H$ 5100_H : $AF00_H$ 9400_H	Nominal range
-20,0007 : -23,5160	-27649 : -32512	$93FF_H$: 8100_H	Underrange
< -23,5160	-32768	8000_H	Underflow

Measured values in the event of a wire break in relation to enabled diagnostics

The following additional information applies to the current measuring range 4 to 20 mA:

Table 4-5 Measured values in the event of a wire break in relation to enabled diagnostics

Format	Parameter assignment[1]	Measured values		Description
		Decimal	Hexadecimal	
S7	• "Wire break" diagnostics enabled	32767	$7FFF_H$	• "Open circuit" diagnostic message
	• "Wire break" diagnostics disabled • "Overflow/underflow" diagnostics enabled	-32767	8000_H	• Measured value after leaving the underrange • "Lower limit value undershot" diagnostic message
	• "Wire break" diagnostics disabled • "Overflow/underflow" diagnostics disabled	-32767	8000_H	• Measured value after leaving the underrange
[1] Measuring range limits for wire break and underflow detection: At 1.185 mA				

4.4 Effect on analog value representation

4.4.1 Effect of the supply voltage and the operating state on analog input values

The input values of the analog modules are dependent on the supply voltage for electronics/encoders and on the operating state of the PLC (CPU of the DP master). This is illustrated by the table below.

Table 4-6 Relationship between the analog input values for the operating state of the PLC (CPU of the DP master) and the supply voltage L+

Operating state of the PLC (CPU of the DP master)		Supply voltage L+ on ET 200S (power module)	Input value of the electronic module with analog inputs (evaluation possible on the CPU of the DP master)
POWER ON	RUN	L+ present	Process values
			$7FFF_H$ until first conversion after startup, or after assignment of parameters for the module is completed.
		L+ missing	$7FFF_H$
POWER ON	STOP	L+ present	Process value
		L+ missing	$7FFF_H$
POWER OFF	-	L+ present	-
		L+ missing	-

4.4.2 Effect of the value range on the 2 AI I 2/4WIRE HF analog input

The way electronic modules respond to analog inputs depends on where the input values fall within the value range. This is illustrated by the table below.

Table 4-7 Response of the analog modules, depending on where the analog input value falls within the range of values

Measured value within ...	Input value in SIMATIC S7 format	Input value in SIMATIC S5 format
Nominal range	Measured value	Measured value
Over-/underrange	Measured value	Measured value
Overflow	$7FFF_H$	End of the overshoot range +1 plus overflow bit
Underflow	8000_H	End of the underrange -1 plus overflow bit
Prior to parameter assignment, or incorrect parameter assignment	$7FFF_H$	$7FFF_H$

Connecting

5

5.1 Connecting measuring sensors

Introduction

You can connect different measuring encoders to the analog input module:

- Current transmitters as:
  - 2-wire transmitters
  - 4-wire transmitters

In this chapter you will find out how to connect the measuring encoders and what to watch out for when doing so.

Cables for analog signals

You should use shielded and twisted-pair cables for the analog signals. This reduces the effect of interference. You should ground the shield of the analog cables at both ends. If there are differences in potential between the cable ends, an equipotential bonding current that may interfere with the analog signals will flow across the shield. If this is the case, you should only ground the shield at one end of the cable.

Analog input modules

The analog input modules are electrically isolated:

- Between the logic and backplane bus
- Between the load voltage and the channels.
  - Electrical isolation: No link between M_{ANA} and the central grounding point (U_{ISO})

Note

Ensure that this difference in potential U_{ISO} does not exceed the permitted value. If there is a possibility of exceeding the permitted value, establish a connection between terminal M_{ANA} and the central grounding point.

Connecting measuring encoders to analog inputs

There can only be a limited potential difference U_{CM} (common mode) between the measuring lines of the input channels. To ensure that the permitted value is not exceeded, you must take different steps depending on the whether the encoders are isolated or non-isolated. The steps you have to take are described in this chapter.

Abbreviations used

The meanings of the abbreviations in the figures below are as follows:

M+:	Measuring line (positive)
M-	Measuring line (negative)
M	Ground connection
L+	Rated load voltage 24 V DC
U_{CM}	Potential difference between inputs and reference potential of the measuring circuit M_{ANA}
U_{ISO}	Potential difference between M_{ANA} and central grounding point

Isolated measuring encoders

The isolated measuring encoders are not connected to the local ground potential. These can be potential-free. Depending on local conditions or interference, potential differences U_{CM} (static or dynamic) can occur between the measuring lines M- of the input channels and the reference point of the measuring circuit M_{ANA}.

The permitted value for U_{CM} must not be exceeded, even in environments with strong EMC interference.

The following schematic representation illustrates the connection of isolated measuring encoders to the optically isolated analog input modules.

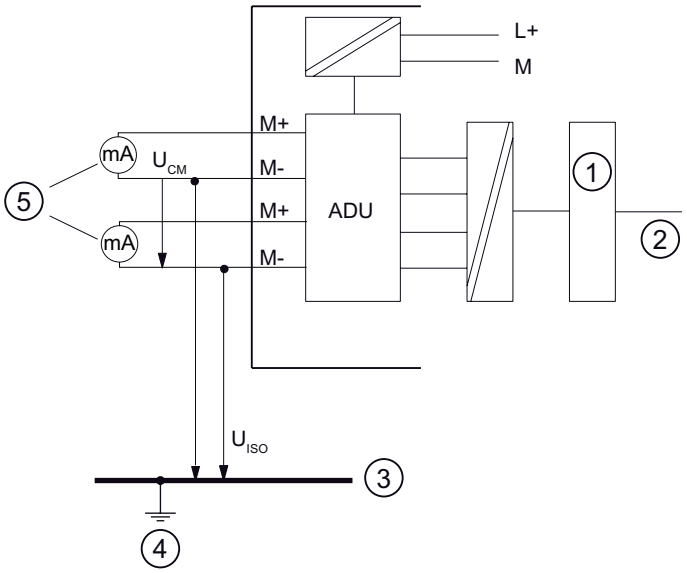

① Logic
② Backplane bus
③ Ground bus
④ Central grounding point
⑤ Isolated measuring encoders

Non-isolated measuring encoders

The non-isolated measuring encoders are connected to the local ground potential. Depending on local conditions or interference, potential differences U_{CM} (static or dynamic) can occur between the locally distributed measuring points.

If the permitted value for U_{CM} is exceeded, there must be equipotential bonding conductors between the measuring points.

The following schematic representation illustrates the connection of non-isolated measuring encoders to an optically isolated analog input module.

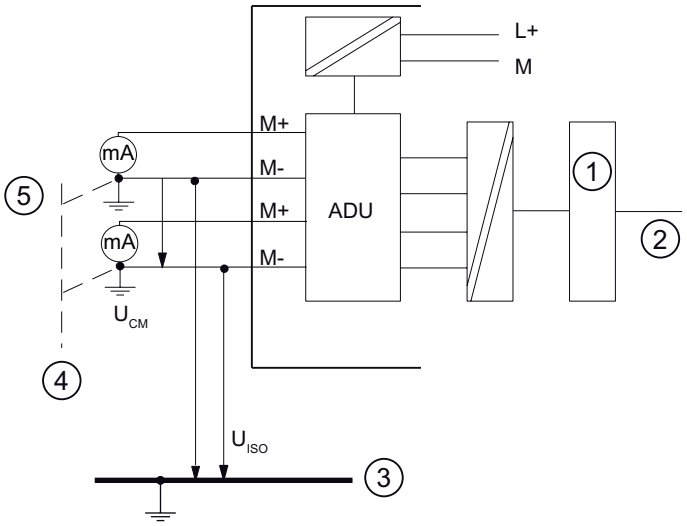

① Logic
② Backplane bus
③ Ground bus
④ Equipotential bonding conductor
⑤ Non-isolated measuring encoders

Operating four-wire transmitters on an external voltage supply

If there is electrical isolation between the output and the transmitter supply, you can connect the transmitter to the 2 AI I 2/4WIRE without the need for additional connections.

5.2 Wiring unused channels of the analog input modules

Rules

Pay attention to the following instructions when wiring unused channels:

- "Deactivate" unused input channels when assigning parameters.
- A deactivated channel always returns the value $7FFF_H$.

5.3 Using the shield connection

Rules

To prevent interference we recommend the following for analog electronic modules:

- Use shielded wires to the sensors and actuators.
- Lay out the wire shields on the shield connection.
- Connect the shield connection to the ground bus with low impedance.