MANUFACTURER DOCUMENT PACKAGE

Manufacturer's Manual

Reference package for procurement and maintenance review

BENTLY NEVADA

128276-01F 131151-01

HALF-HEIGHT FRONT RACK COVER

Used with the applicable 3500/05 Rack Spares configuration.

REFERENCE PACKAGE

OFFICIAL DOCUMENT

Selected official manufacturer pages follow this cover.

Source: Bently Nevada 3500/05 rack specification 141525-01 Rev. J; half-height blank front cover ordering entry, page 3; original part markings.

3500/05 System Rack

Bently Nevada* Asset Condition Monitoring

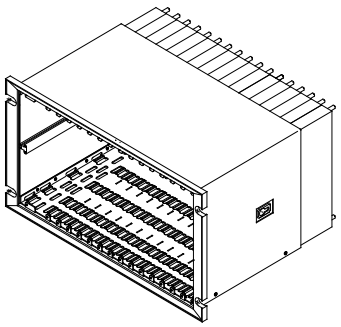

Description

The 3500 System rack design holds all 3500 monitor modules and rack power supplies. It allows the various 3500 modules to communicate with one another and the power supplies to distribute power to each module as required.

3500 Racks are available in two sizes:

1. **Full-size Rack** – 19-inch EIA rack with 14 available module slots
2. **Mini-Rack** – 12-inch rack with 7 available module slots

3500 racks are available in three formats:

1. **Panel mount –** This rack format mounts to rectangular cut-outs in panels, and secures to the panel using clamps supplied with the rack. Wiring connections and I/O modules are accessible from the rear of the rack.
2. **Rack mount** – This rack format mounts the 3500 rack on 19-inch EIA rails. Wiring connections and I/O modules are accessible from the rear of the rack.
3. **Bulkhead mount** – This rack format mounts the rack against a wall or panel when it is not possible to access the rear of the rack. Wiring connections and I/O modules are accessible from the front of the rack. The 3500/05 Mini-Rack is not available in this format.

The Power Supplies and Rack Interface Module must occupy the far left rack positions. The remaining 14 rack positions (7 rack positions for the Mini-Rack) are available for any combination of modules. If you plan to install internal barriers in the 3500 rack, consult our document part number 141495-01, Specifications and Ordering Information for 3500 Internal Barriers.

Power Supply Blank Cover Kit

Order the following

131150-01

Power Supply Blank Front Panel (Qty 1)

128085-01

Power Supply Input Connector Cover (Qty 1)

04310251

Screw for Power Supply Input Cover (Qty 2)

Full-height Blank Monitor Cover Kit

Order as 130768-01 which *includes*

130944-01

Full-height Monitor Blank Front Panel (Qty 1)

128031-01

I/O Module Cover (Qty 1)

04310251

Screw for I/O Module Cover (Qty 2)

Half-height Blank Monitor Cover Kit

Order the Following

131151-01

Half-height Blank Front Panel Cover (Qty 1)

Misc Components

00561941

TMR/SIM jumper (installed on the 3500 backplane)

144863-01

Adapter Panel, Mini-rack, 19-inch

129766-01

Rack Installation and Maintenance Manual

130432-01

Field Wiring Diagrams