MANUFACTURER DOCUMENT PACKAGE

Manufacturer's Manual

Reference package for procurement and maintenance review

ABB

V18345-2010421001

ELECTRO-PNEUMATIC VALVE POSITIONER

Used with the applicable TZIDC configuration.

REFERENCE PACKAGE

OFFICIAL DOCUMENT

Selected official manufacturer pages follow this cover.

Source: ABB TZIDC Data Sheet 10/18-0.22-EN Rev. C; specifications and ordering table.

Data Sheet
10/18-0.22-EN

Electro-Pneumatic Positioner TZIDC

for 4 … 20 mA two-wire technology

- **Low operating cost**
- **Compact design**
- **Well-proven technology**
- **Robust and environmentally ruggedized**
- **Wide operating temperature range**
  -40 ... 85 °C (-40 ... 185 °F)
- **Easy to commission, “single pushbutton” operating philosophy**
- **Mechanical position indicator**
- **ATEX, FM, CSA, GOST and IECEx approvals**
- **For SIL2 safety loops**



HART® FIELD COMMUNICATIONS PROTOCOL

Compact, well-proven, and flexible

1 Description

The TZIDC is an electronically configurable positioner with communication capabilities designed for mounting to pneumatic linear or rotary actuators. It features a small and compact design, a modular construction, and an excellent cost-performance ratio.

Fully automatic determination of the control parameters and adaptation to the final control element yield considerable time savings and an optimal control behavior.

1.1 Pneumatics

An I/P module with subsequent pneumatic amplifier is used to control the pneumatic actuator. The well-proven I/P module proportionally converts the permanent electrical positioning signal from the CPU into a pneumatic signal used to adjust a 3/3-way valve.

The air flow for pressurizing or depressurizing the actuator is continuously adjusted. As a result, excellent control is achieved. When reaching the set point, the 3/3-way valve is closed in center position to minimize the air consumption.

Four different pneumatics versions are available: for single-acting or double-acting actuators, each with “fail-safe” or “fail-freeze” function.

1.1.1 “Fail-safe” function

If the electrical power supply fails, the positioner output 1 is depressurized, and the pneumatic actuator’s return spring moves the valve to the defined safe position. In case of a double-acting actuator the second output 2 is additionally pressurized.

1.1.2 “Fail-freeze” function

If the electrical power supply should fail, the positioner output 1 (and 2, if applicable) is closed and the pneumatic actuator stops (“freezes”) the valve in the current position. If compressed air supply should fail, the positioner depressurizes the actuator.

1.2 Operation

The positioner has a built-in operating panel providing a 2-line LCD and 4 pushbuttons for optimal local configuration, commissioning and operational monitoring.

Alternatively, the appropriate configuration program and the available communication option can be used.

1.3 Communication

The standard TZIDC model has a local communication interface (LKS connector). Additionally, a “HART communication” option for communication via the 20 mA signal is available. Both communications are based on the HART Protocol.

1.4 Inputs and outputs

In addition to its input for the analog position set point the TZIDC positioner is equipped with a digital input which can be used to activate various protective functions in the device via the process control system. A digital output allows you to output collective alarms or fault messages.

1.5 Modular design

The TZIDC basic model can be enhanced at any time by retrofitting optional equipment. Option modules for analog or digital position feedback or a shutdown-module can be installed. Additionally, a mechanical position indicator, proximity switches or 24 V microswitches are available for indicating the position independently of the mother board function.

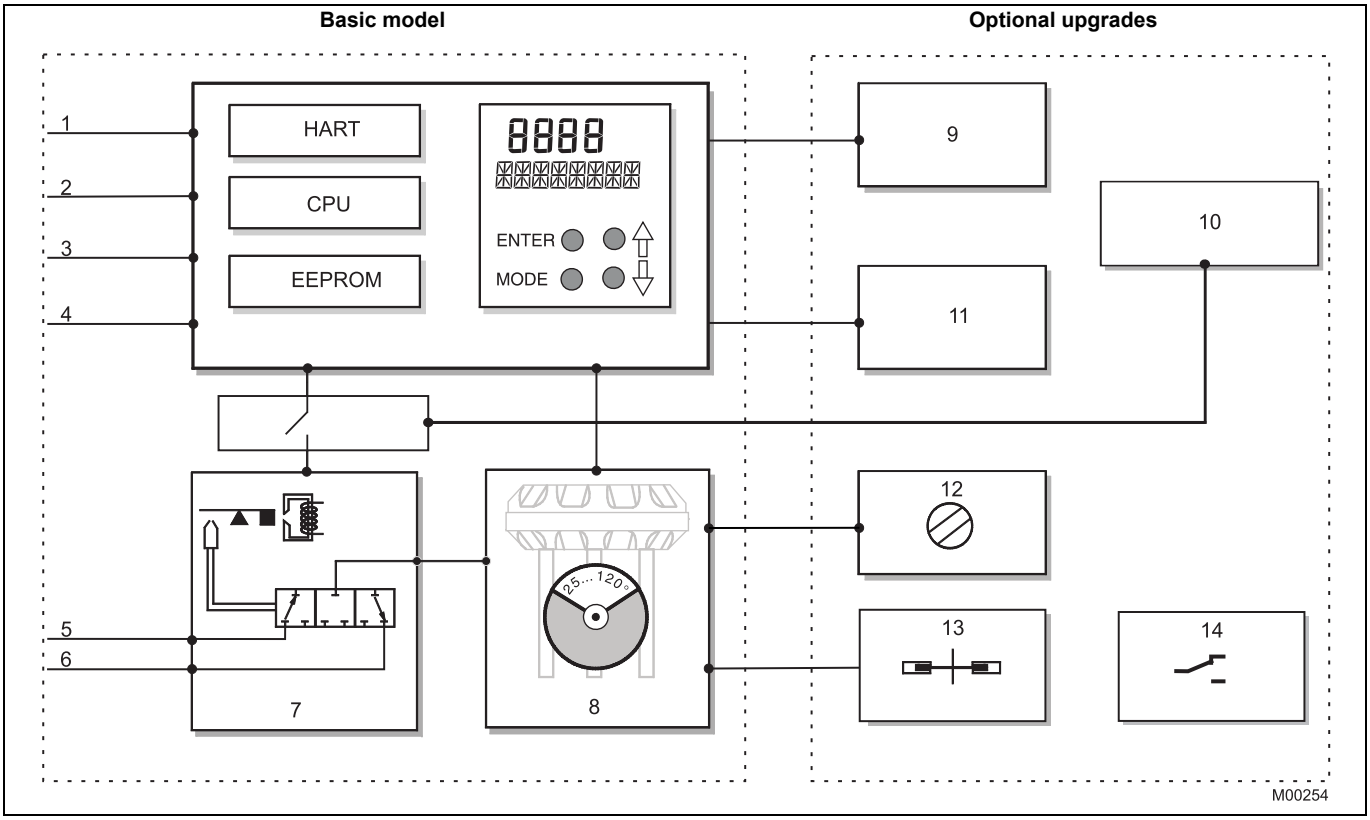

Fig. 1: TZIDC schematic diagram

Basic model

1 LKS plug
2 Positioning signal 4 … 20 mA
3 Digital input
4 Digital output DO
5 Supply, 1.4 … 6 bar
6 Exhaust
7 I/P module with 3/3-way valve
8 Position sensor (optional up to 270° rotation angle)

Optional upgrades

9 Plug module for analog feedback (4 … 20 mA)
10 Plug-in module for safety shutdown (forced depressurization)
11 Plug module for digital feedback
12 Installation kit for mechanical position indicator
13 Installation kit for digital feedback with proximity switches
14 Installation kit for digital feedback with 24 V microswitches

Important

With optional upgrades either the “Installation kit for digital feedback with proximity switches” (13) or the “Installation kit for digital feedback with microswitches 24 V” (14) can be used.

In both cases, the “mechanical position indicator” (8) must be installed.

2 Mounting versions

2.1 To linear actuators in accordance with the standard

Lateral attachment is in accordance with DIN / IEC 534 (lateral attachment to NAMUR). The required attachment kit is a complete set of attachment material, but does not include the screwed pipe connections and air pipes.

2.2 To rotary actuators in accordance with the standard

This attachment is designed for mounting according to the standard VDI/VDE 3845. The attachment kit consists of a console with mounting screws for mounting on a rotary actuator. The adapter for coupling the positioner feedback shaft to the actuator shaft has to be ordered separately. Screwed pipe connections and air pipes have to be provided on site.

2.3 Integral mounting to control valves

The TZIDC positioner featuring single acting pneumatic action is also suitable for integral mounting.

The required holes are found at the back of the device.

The benefit of this design is that the point for mechanical stroke measurement is protected and that the positioner and actuator are linked internally. No external tubing is required.

2.4 Special actuator-specific mounting

In addition to the mounting methods described above, there are special actuator-specific attachments.

Please contact us for details.

4 Communication

4.1 DTM

The DTM (**D**evice **T**ype **M**anager) for TZIDC is based on the FDT/DTM technology (FDT 1.2) and can be integrated in a process control system or loaded in a PC with the DSV401 (SMART VISION) program. This allows you to work with the same user interface in the commissioning phase, during operation, and for service tasks for monitoring the device, setting parameters, and uploading data.

Communication is based on the HART protocol. It occurs via a local interface connection (LKS) or in frequency-modulated mode using an FSK-modem connected at any chosen point of the 20 mA signal line. Communication has no effect on operation. Newly set parameters are saved in the non-volatile memory directly upon the download into the device, and become active immediately.

4.2 LKS adapter (RS-232 interface converter)

You can easily connect your TZIDC positioner to a PC, e.g., in the workshop or in the commissioning phase, by using the positioner's LKS adapter (LKS = local communication interface).

An RS-232 interface converter adapts the signals on the serial PC port to the level of the positioner's LKS.

4.3 FSK Modem

The FSK modem establishes a digital frequency-modulated communication (**F**requency **S**hift **K**eying) with the TZIDC positioner.

Tapping is possible at any chosen point of the 20 mA signal line.

We recommend that you use an electrically isolated FSK modem. It is bus-compatible when used with isolating amplifiers. Even connecting explosion-protected field devices is possible, on condition that the FSK modem is run outside the hazardous area.

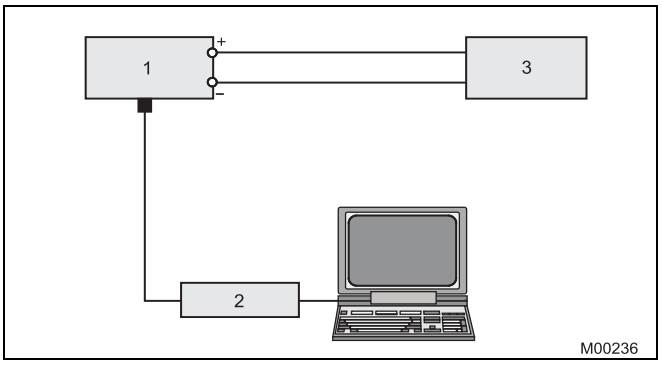

Fig. 5: Local communication via LKS adapter

1 TZIDC
2 LKS adapter
3 Controller

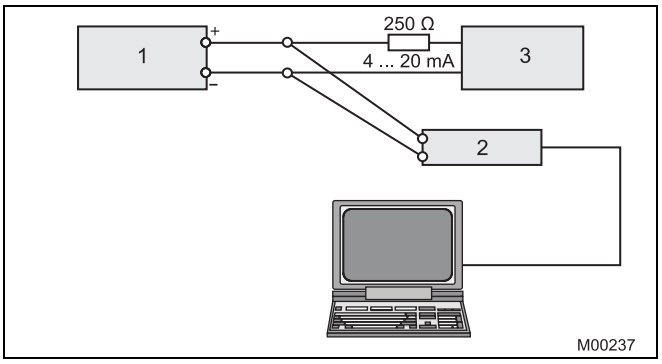

Fig. 6: HART communication with FSK modem via 20 mA signal line

1 TZIDC
2 FSK modem
3 Controller

5 Technical data

5.1 Input

Output signal (two-wire technology)

Nominal range	4 ... 20 mA
Split range configuration between	20 ... 100 % of the nominal range
Max.	50 mA
Min.	3.6 mA
Starting at	3.8 mA
Load voltage at 20 mA	9.7 V
Impedance at 20 mA	485 Ω

Digital input

Control voltage	0 ... 5 V DC logical switching state "0" 11 ... 30 V DC logical switching state "1"
Current	max. 4 mA

5.2 Output

Compressed air output

Range	0 ... 6 bar (0 ... 90 psi)
Air capacity	5.0 kg/h = 3.9 Nm³/h = 2.3 sfcm at 1.4 bar (20 psi) supply pressure 13 kg/h = 10 Nm³/h = 6.0 sfcm at 6 bar (90 psi) supply pressure
Output function	For single or double-acting actuators, air is vented from actuator or actuator is blocked in case of (electrical) power failure
Shut-off values	End position 0 % = 0 ... 45 % End position 100 % = 55 ... 100 %

Digital output (control circuit to DIN 19234/NAMUR)

Supply voltage	5 ... 11 V DC
Current > 0.35 mA … < 1.2 mA	Switching state logical "0"
Current > 2.1 mA	Switching state logical "1"
Effective direction (configurable)	normally logical "0" or logical "1"

5.3 Travel

Rotation angle

Used range	25 ... 120 (rotary actuators, optional 270°) 25 ... 60 ° (linear actuators)
Travel limit	Min. and max. limits, freely configurable between 0 ... 100 % of total travel (min. range > 20 %)
Travel time prolongation	Range of 0 ... 200 seconds, separately for each direction
Dead band time limit	Setting range 0 ... 200 seconds (monitoring parameter for control until the deviation reaches the dead band)

5.4 Air supply

Instrument air	free of oil, water and dust acc. to DIN / ISO 8573-1 pollution and oil content according to Class 3 (purity: max. particle size: 5 µm, max. particle density: 5 mg / m^3; oil content: max. concentration: 1 mg / m^3; pressure dew point: 10 K below operating temperature
Supply pressure	1.4 ... 6 bar (20 ... 90 psi) Note: Do not exceed the max. operating pressure of the actuator!
Air consumption	< 0.03 kg/h / 0.015 scfm (independent of supply pressure)

5.5 Transmission data and influences

Output Y1

Increasing	Increasing output signal 0 ... 100 % Increasing pressure at output
Decreasing	Increasing output signal 0 ... 100 % Decreasing pressure at output

Action (output signal)

Increasing	Signal 4 ... 20 mA = actuator position 0 ... 100%
Decreasing	Signal 20 ... 4 mA = actuator position 0 ... 100%

Characteristic curve (travel = f {signal})

Linear, equal percentage 1:25 or 1:50 or 25:1 or 50:1 and freely configurable with 20 reference points.

Deviation	≤ 0.5 %
Tolerance band	0.3 ... 10 %, adjustable
Dead band	0.1 ... 10 %, adjustable
Resolution (A/D conversion)	> 16000 steps
Sample rate	20 ms
Influence of ambient temperature	≤ 0.5 % per 10 K
Influence of vibration	≤ 1 % to 10 g and 80 Hz

Seismic vibration

Meets requirements of DIN / IEC 68-3-3 Class III for strong and strongest earthquakes.

Influence of mounting orientation

Not measurable.

Complies with the following directives

- EMC Directive 89 / 336 / EWG as of May 1989
- EC Directive for CE conformity marking

Communication

- HART Protocol 5.9
- Local connector for LKS (not in Ex area)
- HART communication via 20 mA signal line with (optional) FSK modem

5.6 Environmental capabilities

Ambient temperature

For operation, storage and transport:	-40 … 85 °C (-40 ... 185 °F)
When using proximity switches SJ2-S1N (NO):	-25 … 85 °C (-13 ... 185 °F)

Relative humidity

Operational (with closed housing and air supply switched on):	95 % (annual average), condensation permissible
Transport and storage:	75 % (annual average), non-condensing

5.7 Housing

Material/Protections
Aluminum, protection class IP 65 / NEMA 4X

Surface/color
Electrostatic dipping varnish with epoxy resin, stove-hardened. Case varnished black, RAL 9005, matte, housing cover Pantone 420.

Electrical connections
Screw terminals: Max. 1.0 mm² for options,
Max. 2.5 mm² for analog signal.
Note: Do not expose the terminals to strain.
Cable entry: 2 tap holes 1/2-14 NPT or
M20 x 1.5 (1 x with cable gland and
1 x with pipe plug)

Pneumatic connections
Threads G 1/4 or 1/4-18 NPT

Weight
1.7 kg

Mounting orientation
any orientation allowed

Dimensions
see dimensional drawings

5.8 Safety Integrity Level

Important
Applies to applications with single-acting and depressurizing pneumatics.

The positioner TZIDC and the emergency shutdown module for TZIDC meet the requirements regarding:

- functional safety acc. to IEC 61508
- explosion protection (depending on the model)
- electromagnetic compatibility in accordance with EN 61000

Without the input signal, the pneumatic module in the positioner vents the drive and the installed spring in it moves the valve in a predetermined end position (OPEN or CLOSED).

SIL specific safety-related characteristics:

Device	SFF	PFDav	$\lambda_{dd} + \lambda_s$	λ_{du}
TZIDC / TZIDC-200 as shutdown module	94 %	$1{,}76 * 10^{-4}$	718 FIT	40 FIT
TZIDC / TZIDC-200 with supply current 0 mA	94 %	$1{,}76 * 10^{-4}$	651 FIT	40 FIT

For details refer to the Management Summary in the SIL-Safety Instructions 37/18-79XA.

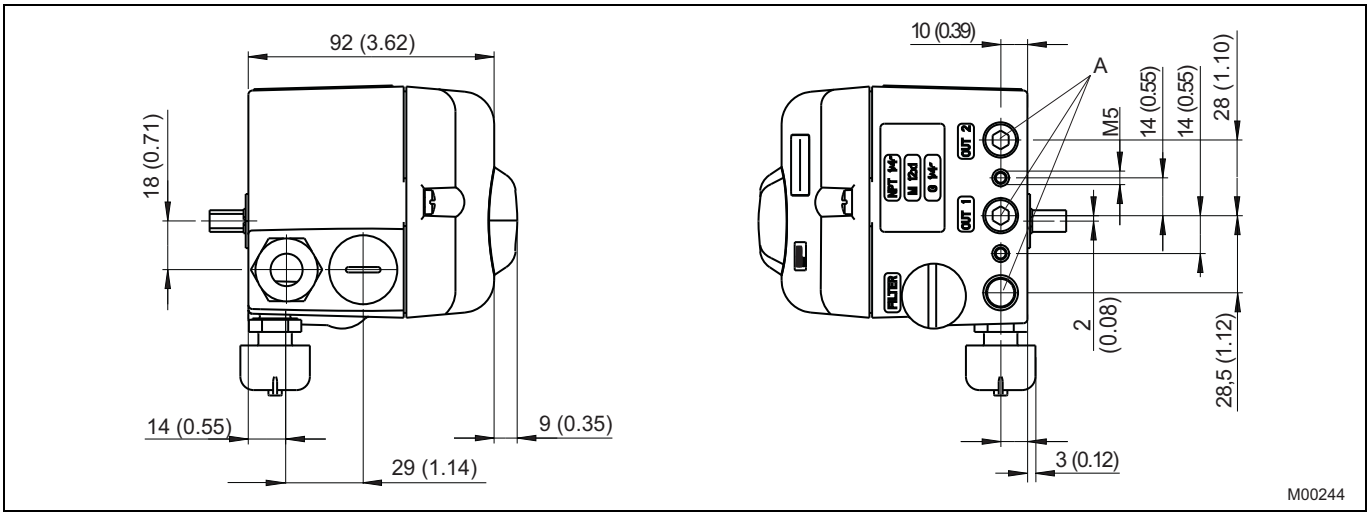

Fig. 11: side view (from left to right)
A Pneumatic connections, NPT 1/4"-18 or G1/4"

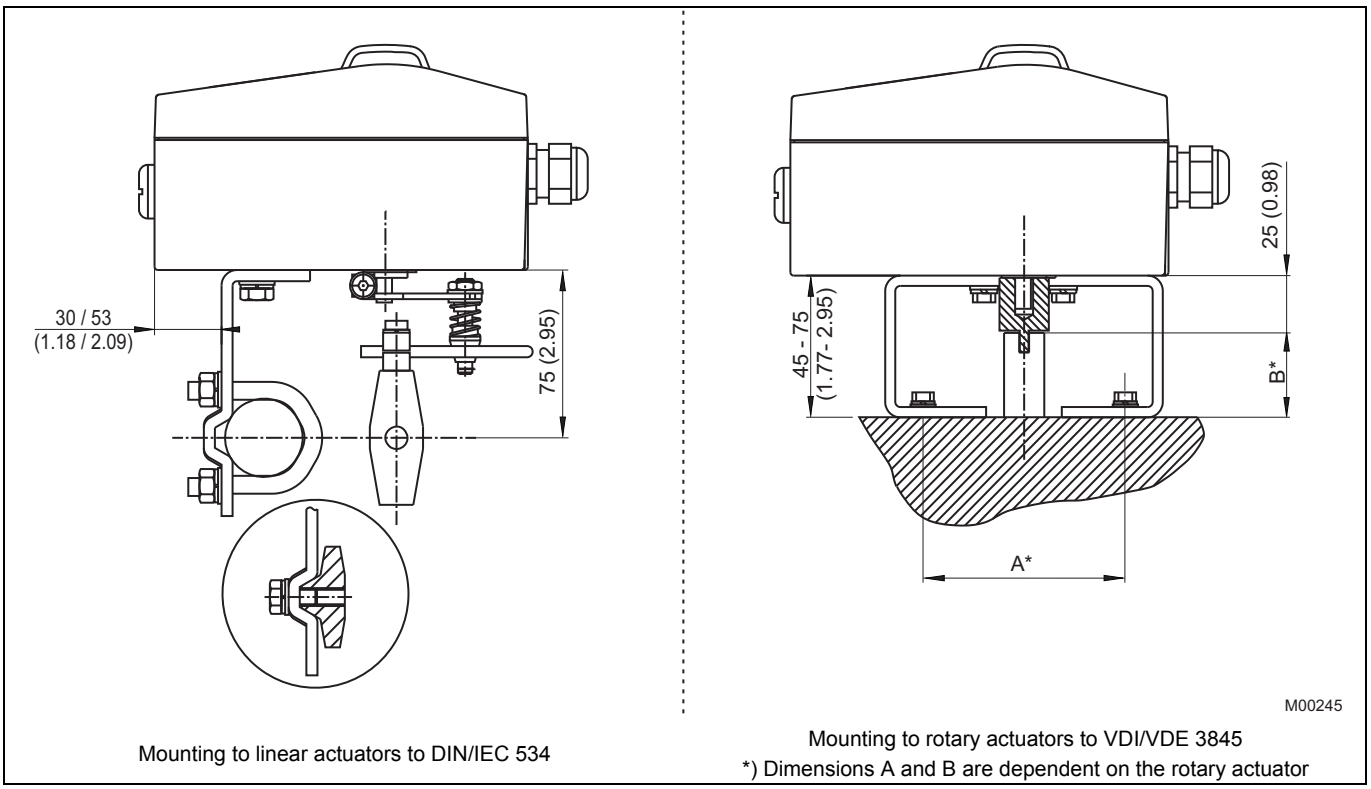

Mounting to linear actuators to DIN/IEC 534

Mounting to rotary actuators to VDI/VDE 3845
*) Dimensions A and B are dependent on the rotary actuator

Fig. 12: Mounting drawings

8 Ordering information

Electro-Pneumatic Positioner Variant digit No.	1 - 7	8	9	10	11	12	13	14	Code			
TZIDC Catalog No.	**V18345-**		**0**									
intelligent, configurable												
with indicator and operator panel												
Case / Mounting												
Case made of aluminium, varnished, protection IP 65 (NEMA 4X)												
for mounting to linear actuators acc. to DIN/IEC 534 / NAMUR												
or to rotary actuators acc. to VDI/VDE 3845												
also ready for integral mounting		1										
as above, but with mechanical position indicator		2										
for mounting to rotary actuators acc. to VDI/VDE 3845												
with extended rotation angle up to 270°		5										
as above, but with mechanical position indicator		6										
Note:												
For attachment according to standard, additional												
mounting material is required (see "Accessories")												
Input / communication port												
Input 4...20 mA, two-wire												
with connector plug for LKS adapter				1								
with connector plug for LKS adapter and												
FSK module for HART communication				2								
Explosion protection												
without					0							
ATEX Ex II 2 G EEx ib II C T6					1							
FM/CSA					2							
ATEX EEx n A II T6					4							
IECEx Ex ib IIC T6					5							
IECEx Ex nA II T6					6							
ATEX Ex II 2 G EEx ia II C T6					7							
GOST Russia Ex II 2 G EEx ib II C T6					B							
GOST Russia EEx n A II T6					C							
other explosion protection certificates upon request												
Output / safe position (in case of an electrical power failure)												
Single acting, fail safe						1						
fail freeze						2						
Double acting, fail safe						4						
fail freeze						5						
Connections												
Cable: Thread 1/2-14 NPT Air pipe: Thread 1/4-18 NPT							2					
Cable: Thread M20 x 1.5 Air pipe: Thread 1/4-18 NPT							5					
Cable: Thread M20 x 1.5 Air pipe: Thread G 1/4							6					
Option modules for analog or digital position feedback												
without								0				
Plug-in module analog position feedback (sign. range 4 … 20 mA)								1				
digital position feedback								3				
shutdown module						1)		4				
analog position feedback (sign. range 4 … 20 mA) and digital position feedback								5				
analog position feedback (sign. range 4 … 20 mA) and shutdown module						1)		6				
analog position feedback (sign. range 4 … 20 mA / 48 V)						2)		7				

1) only for fail safe pneumatic

Continued on next page

2) not for explosion protected version

Electro-Pneumatic Positioner	Variant digit No.	1 - 7	11	12	13	14	15	16	17	Code			
TZIDC intelligent, configurable with indicator and operator panel	Catalog No.	**V18345-**						**0**					
Optional mechanical kit for digital position feedback													
without							0						
Mechanical kit for digital position feedback													
with proximity switches SJ2-SN (NC or logical 1)					3)		1						
with proximity switches SJ2-S1N (NO or logical 0)					3) 4)		3						
with 24 V DC/AC microswitches (change-over contacts)					2) 3)		5						
Design (varnish / coding)													
Standard									1				
Special version chemistry (details on request)									E				
As specified (on request)													

8.1 Additional ordering information

		Code			
Certificates					
SIL2 - Declaration of conformity	5) 6)	CS2			
Certificate of compliance	with the order acc. to EN 10204-2.1 (DIN 50049-2.1)	CF1			
Certificate of compliance	with the order acc. to EN 10204-2.1 (DIN 50049-2.1) with item description	CF2			
Test Report acc. to EN 10204-2.2 (DIN 50049-2.2)		CF3			
Inspection certificate	3.1 acc. to EN 10204 with max. deviation	CBA			
Device identification label					
includes lettering	(plain text, max. 16 letters)				
stainless steel	18.5 x 65 mm	MK1			
sticker	41 x 32 mm	MK2			
sticker	11 x 25 mm	MK3			

2) not for explosion protected version
3) only for model with mechanical position indicator
4) only for ambient temperature range -25 °C to +85 °C
5) not with Explosion protection ATEX Ex II 2 G EEx ia II C T6 (code 7)
6) only for single acting and fail safe pneumatic