FIELD INSTALLATION QUICK GUIDE

Installation Instructions

V18345-2010421001

Electro-pneumatic valve positioner

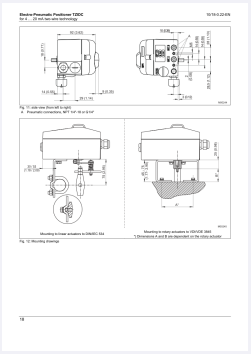

PRODUCT	V18345-2010421001
FAMILY	TZIDC
FUNCTION	Electro-pneumatic valve positioner
STATUS	Verify exact installed equipment

Prepared by Amikon Limited from ABB documentation. This guide supplements the complete manufacturer manual and site procedure.

01 CONFIRM THE ORDERED CONFIGURATION

Command input	4-20 mA, two-wire
Pneumatic action	Double acting, fail-safe
Mechanical indication	Position indicator fitted
Position feedback	4-20 mA analog feedback module
Communication execution	Local LKS connector; without HART FSK module
Explosion-protection execution	Without explosion protection

02 PREPARATION AND CONNECTION

- Align the feedback shaft and linkage for the documented actuator mounting.
- Preserve the double-acting fail-safe pneumatic arrangement.
- Use 1/2-14 NPT cable and 1/4-18 NPT pneumatic connections.
- Provide clean instrument air within 1.4-6 bar and the actuator limit.

03 OFFICIAL INSTALLATION REFERENCE

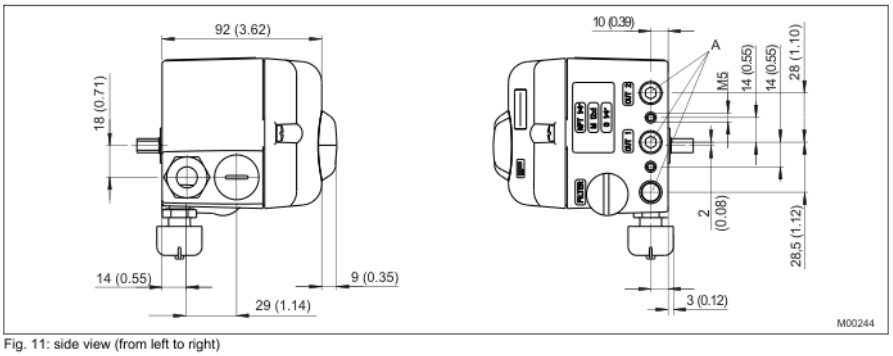

Fig. 11: side view (from left to right)
A Pneumatic connections, NPT 1/4"-18 or G1/4"

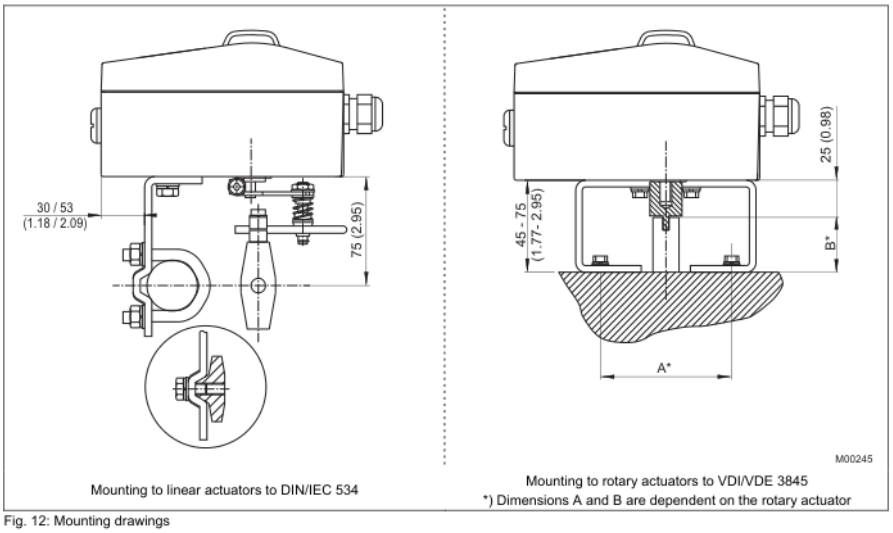

Fig. 12: Mounting drawings

Official manufacturer page reproduced at its original aspect ratio.

04 COMMISSIONING CHECKS

01	Verify the complete 2010421001 order-code execution.
02	Inspect the mechanical indicator and linkage alignment.
03	Confirm command and analog-feedback loop wiring.
04	Set travel endpoints and intended direction of action.
05	Test actual travel and 4-20 mA position feedback.
06	Verify fail-safe behavior and inspect for air leakage.

05 CONTROLLED DOCUMENT

Official source	ABB TZIDC 10/18-0.22-EN, pp.5,18.
Product record	V18345-2010421001
Manufacturer	ABB
Warranty	12 months from AMIKON
Support	INFO@AMIKON.CN

AMIKON PRODUCT SUPPORT

+86-18020776786 INFO@AMIKON.CN **AMIKONG.COM**