MANUFACTURER DOCUMENT PACKAGE

Manufacturer's Manual

Reference package for procurement and maintenance review

BENTLY NEVADA

330104-01-05-50-02-00

ARMORED PROXIMITY SENSING PROBE

Used with the applicable 3300 XL 8 mm configuration.

REFERENCE PACKAGE

OFFICIAL DOCUMENT

Selected official manufacturer pages follow this cover.

Source: Bently Nevada 3300 XL 8 mm Datasheet 141194 Rev. AM, applicable specification, ordering and dimensional sections.

3300 XL 8 mm Proximity Transducer System

Datasheet

Cordant™

141194 Rev. AM



Description

The 3300 XL 8 mm Proximity Transducer System consists of:

- One 3300 XL 8 mm probe,
- One 3300 XL extension cable[1], and
- One 3300 XL Proximitor Sensor[2].

The system provides an output voltage that is directly proportional to the distance between the probe tip and the observed conductive surface and can measure both static (position) and dynamic (vibration) values. The system's primary applications are vibration and position measurements on fluid-film bearing machines, as well as Keyphasor reference and speed measurements[3].

The 3300 XL 8 mm system delivers the most advanced performance in our eddy current proximity transducer systems. The standard 3300 XL 8 mm 5-meter system also fully complies with the American Petroleum Institute's (API) 670 Standard for mechanical configuration, linear range, accuracy, and temperature stability. All 3300 XL 8 mm proximity transducer systems provide this level of performance and support complete interchangeability of probes, extension cables, and Proximitor sensors, eliminating the need to match or bench calibrate individual components.

Each 3300 XL 8 mm Transducer System component is backward compatible and interchangeable[4] with other non-XL 3300 series 5 mm and 8 mm transducer system components[5]. This compatibility includes the 3300 5 mm probe, for applications in which an 8 mm probe is too large for the available mounting space[6,7].

Baker Hughes

Specifications

Unless otherwise noted, the following specifications are for a 3300 XL 8 mm Proximitor Sensor, extension cable and 8 mm probe between +18°C and +27°C (+64°F to +80°F) at a maximum altitude of 2000 meters, with a -24 Vdc power supply, a 10 kΩ load, an AISI 4140 steel target, and a probe gapped at 1.27 mm (50 mils). Performance characteristics apply to systems that consist solely of 3300 XL 8 mm components. The system accuracy and interchangeability specifications do not apply to transducer systems that are calibrated to any target other than our AISI 4140 steel target.

Electrical

Proximitor Sensor Input	Accepts one non-contacting 3300-series 5 mm, 3300 XL 8 mm Proximity Probe and Extension Cable.
Power	Requires -17.5 Vdc to -26 Vdc when installed with non-incendive circuit connected per installation drawing 140979 at 12 mA maximum consumption, -23 Vdc to -26 Vdc with barriers. Operation at a more positive voltage than -23.5 Vdc can result in reduced linear range.
Supply Sensitivity	Less than 2 mV change in output voltage per volt change in input voltage.
Output Resistance	50 Ω

Nominal Probe DC Resistance	
Resistance (R_{PROBE}) from Center Conductor to Outer Conductor	
Probe Length (m)	**R_{PROBE}(Ω)**
0.5	7.45 ± 0.50
1.0	7.59 ± 0.50
1.5	7.73 ± 0.50
2.0	7.88 ± 0.50
3.0	8.17 ± 0.50
5.0	8.73 ± 0.50
9.0	9.87 ± 0.50

Nominal Extension Cable DC Resistance	
Resistance (R_{CORE}) from Center Conductor to Center Conductor	
Length of Extension Cable (m)	**RCORE (Ω)**
3.0	0.66 ± 0.10
3.5	0.77 ± 0.12
4.0	0.88 ± 0.13
4.5	0.99 ± 0.15
6.0	1.32 ± 0.21
7.0	1.54 ± 0.23
7.5	1.65 ± 0.25
8.0	1.76 ± 0.26
8.5	1.87 ± 0.28

Resistance (R_{JACKET}) from Outer Conductor to Outer Conductor	
Length of Extension Cable (m)	**R_{JACKET} (Ω)**
3.0	0.20 ± 0.04
3.5	0.23 ± 0.05
4.0	0.26 ± 0.05
4.5	0.30 ± 0.06
6.0	0.39 ± 0.08
7.0	0.46 ± 0.09
7.5	0.49 ± 0.10
8.0	0.53 ± 0.11
8.5	0.56 ± 0.11

Extension Cable Capacitance	69.9 pF/m (21.3 pF/ft) typical
Field Wiring	0.2 to 1.5 mm² (16 to 24 AWG). Recommend using 3 conductor shielded triad cable and tinned field wiring. Maximum length of 305 meters (1,000 feet) between the 3300 XL Proximitor Sensor and the monitor. See the frequency response graphs, Figures 10 and 12, for signal rolloff at high frequencies when using longer field wiring lengths.
Linear Range	2 mm (80 mils). Linear range begins at approximately 0.25 mm (10 mils) from target and is from 0.25 to 2.3 mm (10 to 90 mils) (approximately –1 to –17 Vdc).
Recommended Gap Setting for Radial Vibration	-9 Vdc [approximately 1.27 mm (50 mils)]
Incremental Scale Factor (ISF)	
Standard 5 or 1 meter System	7.87 V/mm (200 mV/mil) ± 5% including interchangeability error when measured in increments of 0.25 mm (10 mils) over the 80 mil linear range from 0°C to +45°C (+32°F to +113°F).
Standard 9 meter System	7.87 V/mm (200 mV/mil) ± 6.5% including interchangeability error when measured in increments of 0.25 mm (10 mils) over the 80 mil linear range from 0°C to +45°C (+32°F to +113°F).
Extended Temperature Range (ETR) for 5 and 9 Meter Systems	7.87 V/mm (200 mV/mil) ± 6.5% including interchangeability error when measured in increments of 0.25 mm (10 mils) over the 80 mil linear range from 0°C to +45°C (+32°F to +113°F).
Deviation from best fit straight line (DSL)	
Standard 5 or 1 meter System	Less than ±0.025 mm (±1 mil) with components at 0°C to +45°C (+32°F to +113°F).
Standard 9 meter System	Less than ±0.038 mm (±1.5 mil) with components at 0°C to +45°C (+32°F to +113°F).
Extended Temperature Range 5 and 9 meter Systems	Less than ±0.038 mm (±1.5 mil) with components at 0°C to +45°C (+32°F to +113°F).

Effects of 60 Hz Magnetic Fields Up to 300 Gauss				
Output Voltage in Mil pp/Gauss				
Gap	5 or 1-meter Proximitor Sensor	9 meter Proximitor Sensor	Probe	Ext. Cable
10	0.0119	0.0247	0.0004	0.0004
50	0.0131	0.0323	0.0014	0.0014
90	0.0133	0.0348	0.0045	0.0045

Mechanical

Probe Tip Material	Polyphenylene sulfide (PPS).
Probe Case Material	AISI 303 or 304 stainless steel (SST).
Probe Cable Specifications	
Standard cable	75Ω triaxial, fluoroethylene propylene (FEP) insulated probe cable in the following total probe lengths: 0.5, 1, 1.5, 2, 3, 5, or 9 meters.
Extended Temperature Range cable	75Ω triaxial, perfluoroalkoxy (PFA) insulated probe cable in the following total probe lengths: 0.5, 1, 1.5, 2, 5, or 9 meters.
Armor (optional on both)	Flexible AISI 302 or 304 SST with FEP outer jacket.
Tensile Strength (Maximum Rated)	330 N (75 lbf) probe case to probe lead. 270 N (60 lbf) at probe lead to extension cable connectors.
Connector Material	Gold-plated brass or gold-plated beryllium copper.

Probe Case Torque		
Probe Type	Maximum Rated	Recommended
Standard forward mounted probes	33.9 N•m (300 in•lbf)	11.2 N•m (100 in•lbf)
Standard forward-mount probes - first three threads	22.6 N•m (200 in•lbf)	7.5 N•m (66 in•lbf)
Reverse-mount probes	22.6 N•m (200 in•lbf)	7.5 N•m (66 in•lbf)
Extension Cable Material		
Standard cable	75 Q triaxial, fluoroethylene propylene (FEP) insulated	
Extended Temperature Range cable	75Ω triaxial, perfluoroalkoxy (PFA) insulated.	
Minimum Cable Bend Radius	25.4 mm (1.0 in)	

3300 XL 8 mm components are both electrically and physically interchangeable with non-XL 3300 5 mm and 8 mm components when minimum permissible cable bend radius is observed.

Connector Material	Gold-plated brass or gold-plated beryllium copper.
Maximum Connector Torque	0.565 N•m (5 in•lbf)

Connector-to-Connector Recommended Torque	
Connector Type	**Tightening Instructions**
Two 3300 XL gold "click" type connectors	Finger tight
One non-XL stainless steel connector and one 3300 XL connector	Finger tight plus 1/8 turn using pliers
Materials	
Proximitor Sensor Material	A308 aluminum
Connector Material	Gold-plated brass or gold-plated beryllium copper.
Length	
System Length	5 or 9 meters (including extension cable) or 1 meter (probe only).
Weight	
Total System Weight (Typical)	0.7 kg (1.5 lb m)
Probe	323 g/m (11.4 oz)
Extension Cable	34 g/m (0.4 oz/ft)
Armored Extension Cable	103 g/m (1.5 oz/ft)
Proximitor Sensor	246 g (8.67 oz)

Thread Engagement Limits

Probe Case Thread	Maximum Length of Thread Engagement
3/8-24	0.563 in
M10x1	15 mm

Maximum thread engagement lengths are per the industry standard of 1.5 times the nominal thread diameter. A fit class matching that of the external probe thread is assumed for all internal threads. Applications with thread engagement lengths exceeding the values in the table above may exhibit binding during installation. Contact your Bently Nevada representative if you require probe thread engagement lengths exceeding the values above. Bently Nevada does not replace proximity probes under warranty due to excessive thread engagement lengths.

Ordering Information

For the detailed listing of country and product-specific approvals, refer to the *Approvals Quick Reference Guide (108M1756)*.

For additional technical documentation, please log in to bntechsupport.com and access the Bently Nevada Media Library.

Ordering Information for Probes

3300 XL 8 mm Proximity Probes:

330101 3300 XL 8 mm Probe, 3/8-24 UNF thread, without armor(2)

330102 3300 XL 8 mm Probe, 3/8-24 UNF thread, with armor(2)

Part Number-AA-BB-CC-DD-EE

A: Unthreaded Length Option	
Unthreaded length must be at least 0.8 in. less than the case length.	
Order in increments of 0.1 in. **Length configurations:** Maximum unthreaded length: 8.8 in. Minimum unthreaded length: 0.0 in. Example: **0 4** = 0.4 in.	
B: Overall Case Length Option	
Order in increments of 0.1 in. **Standard thread configurations:** Maximum case length: 9.6 in. Minimum case length: 0.8 in. Example: **2 4** = 2.4 in.	
C: Total Length Option	
05	0.5 meter (1.6 feet)
10	1.0 meter (3.3 feet)
15	1.5 meter (4.9 feet)
20	2.0 meters (6.6 feet)
30	3.0 meters (9.8 feet)
50	5.0 meters (16.4 feet)
90	9.0 meters (29.5 feet)

3-meter length option is only available on 330101 probes, and is designed for use with the 9 meter Proximitor sensor only.

5-meter probes are designed for use with the 5 meter Proximitor sensor only.

D: Connector and Cable-Type Option	
01	Miniature coaxial ClickLoc connector with connector protector, standard cable
02	Miniature coaxial ClickLoc connector, standard cable
11	Miniature coaxial ClickLoc connector with connector protector, FluidLoc cable
12	Miniature coaxial ClickLoc connector, FluidLoc cable
E: Agency Approval Option	
00	Not required
05	CSA, ATEX, IECEx Approvals

3300 XL 8 mm Proximity Probes, Metric:

330103 3300 XL 8 mm Probe, M10 x 1 thread, without armor (2)

330104 3300 XL 8 mm Probe, M10 x 1 thread, with armor (2)

Part Number-AA-BB-CC-DD-EE

A: Unthreaded Length Option

Unthreaded length must be at least 20 mm less than the case length.

Order in increments of 10 mm
Length configurations:
Maximum unthreaded length: 230 mm
Minimum unthreaded length: 0 mm
Example: **0 6** = 60 mm

B: Overall Case Length Option

Order in increments of 10 mm
Metric thread configurations:
Maximum case length: 250 mm
Minimum case length: 20 mm
Example: **0 6** = 60 mm

C: Total Length Option

05	0.5 meter (1.6 feet)
10	1.0 meter (3.3 feet)
15	1.5 meter (4.9 feet)
20	2.0 meters (6.6 feet)
50	5.0 meters (16.4 feet)
90	9.0 meters (29.5 feet)

5-meter probes are designed for use with the 5 meter Proximitor sensor only.

D: Connector and Cable-Type Option

01	Miniature coaxial ClickLoc connector with connector protector, standard cable
02	Miniature coaxial ClickLoc connector, standard cable
11	Miniature coaxial ClickLoc connector with connector protector, FluidLoc cable
12	Miniature coaxial ClickLoc connector, FluidLoc cable

E: Agency Approval Option

00	Not required
05	CSA, ATEX, IECEx Approvals

3300 XL 8 mm Reverse Mount Probes

330105-02-12-CC-DD-EE3/8-24 UNF threads(2)

330106-05-30-CC-DD-EE M10 x 1 threads(2)

Option Descriptions

C: Total Length Option

05	0.5 meter (1.6 feet)
10	1.0 meter (3.3 feet)
15	1.5 meter (4.9 feet)
20	2.0 meters (6.6 feet)
50	5.0 meters (16.4 feet)
90	9.0 meters (29.5 feet)

5-meter probes are designed for use with the 5 meter Proximitor sensor only.

D: Connector and Cable-Type Option

02	Miniature ClickLoc coaxial connector
12	Miniature ClickLoc coaxial connector , FluidLoc cable

The FluidLoc cable option –12 is not necessary on the vast majority of 330105 and 330106 installations due to the presence of the probe sleeve. Consider carefully the application before ordering the FluidLoc cable option for these probes.

E: Agency Approval Option

00	Not required
05	CSA, ATEX, IECEx Approvals

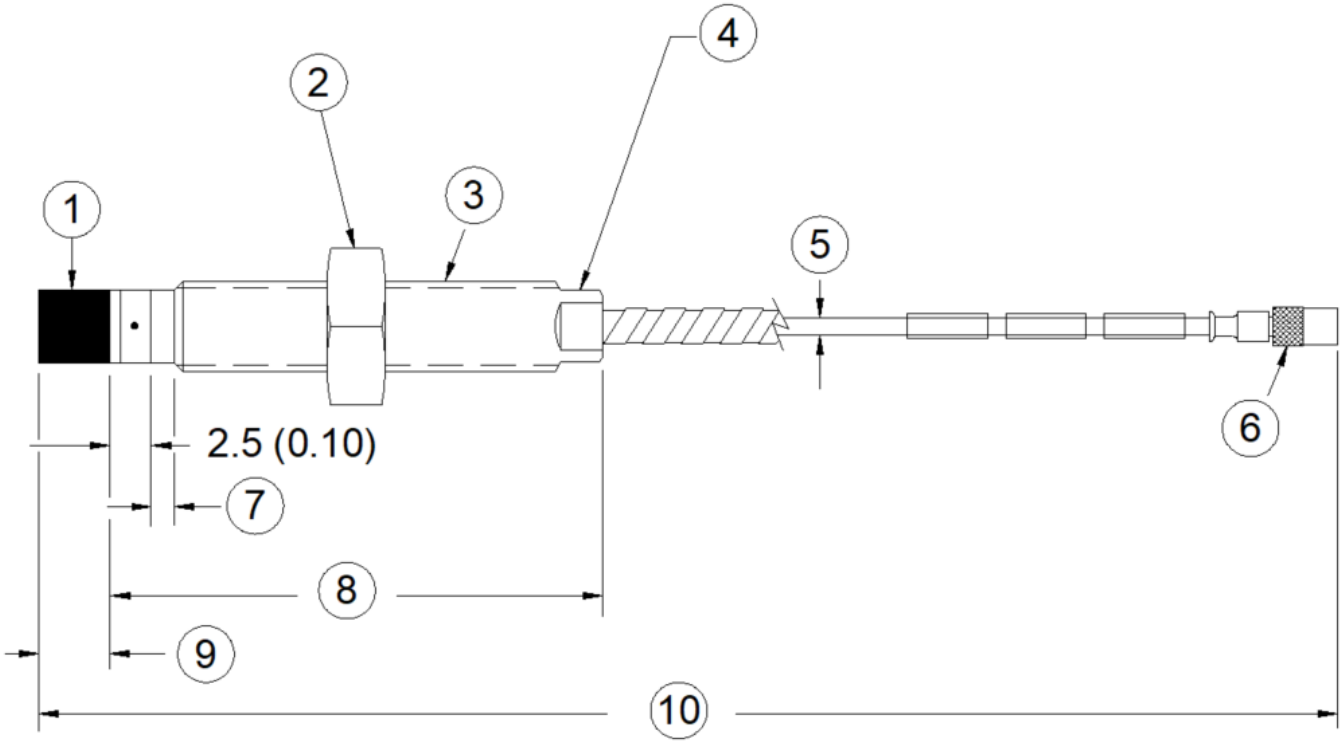

1. Probe tip, 8.0 mm (0.31 in) diameter
2. 9/16 in for 3/8-24 threads, M17 for M10 threads (see Note 2)
3. Case thread
4. 5/16 in wrench flats for 3/8-24 threads; 8mm wrench flats for M10 threads.
5. 75 Ω cable, 3.68 mm (0.145 in) maximum outside diameter, 3.94 mm (0.155 in) maximum outside diameter for FluidLoc cable, 7.67 mm (0.302 in) outside diameter of armor, 9.5 mm (0.38 in) maximum diameter of armor ferrule
6. Miniature male coaxial connector, 7.24 mm (0.285 in) maximum outside diameter “D”
7. Unthreaded length “A”
8. Case length “B”
9. 6.0 mm (0.235 in) maximum
10. Total length “C”, +30%, -0%[3]

Figure 14: 3300 XL 8 mm Proximity Probes, Standard Mount

330101 and 330191, 3/8-24 UNF-2A, without armor [7]

330102 and 330192, 3/8-24 UNF-2A, with armor [6]

330103 and 330193, M10X1 thread, without armor [7]

330104 and 330194, M10X1 thread, with armor [6]