MANUFACTURER DOCUMENT PACKAGE

Manufacturer's Manual

Reference package for procurement and maintenance review

BENTLY NEVADA

330910-00-24-10-01-CN

ARMORED PROXIMITY SENSING PROBE

Used with the applicable 3300 XL NSv configuration.

REFERENCE PACKAGE

OFFICIAL DOCUMENT

Selected official manufacturer pages follow this cover.

Source: Bently Nevada 3300 XL NSv Datasheet 147385 Rev. R, applicable specification, ordering and dimensional sections.

3300 XL NSv Proximity Transducer System

Datasheet

Cordant™

147385 Rev. R

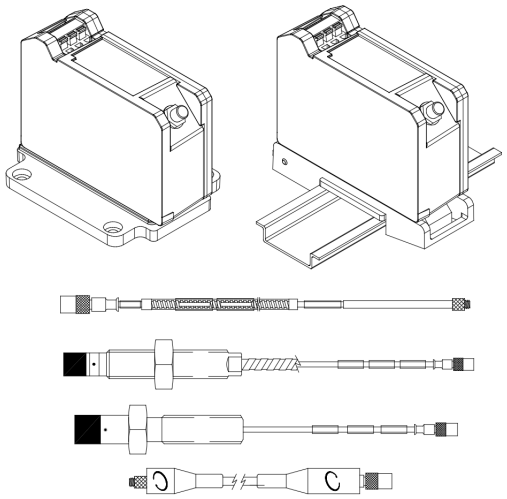

Description

The 3300 XL NSv Proximity Transducer system is intended for use with centrifugal air compressors, refrigeration compressors, process gas compressors, and other machines with tight installation requirements. The 3300 XL NSv Proximity Transducer System consists of:

- a 3300 NSv probe
- a 3300 NSv extension cable
- a 3300 XL NSv Proximitor Sensor(1)

The primary uses for the 3300 XL NSv Transducer System are for areas where counter bore, sideview, or rearview restrictions limit the use of standard Bently Nevada 3300 and 3300 XL 5 and 8 mm Transducer Systems. It is also ideal for small target applications, such as measuring radial vibration on shafts smaller than 51 mm (2 in) or axial position on flat targets smaller than 15 mm (0.6 in). It is primarily used in the following applications on fluid-filmed bearing machines where a small shaft or reduced side-view is present:

- Radial vibration and radial position measurements
- Axial (thrust) position measurements
- Tachometer and zero speed measurements
- Phase reference (Keyphasor signals)

The 3300 XL NSv Transducer System design allows it to replace both the 3300 RAM Transducer Systems and the 3000-series or 7000-series 190 Transducer System. Upgrades from the 3300 RAM system to the 3300 XL NSv system may use the existing probe, extension cable, and monitoring

Baker Hughes

Specifications

Unless otherwise noted, the following specifications are for a 3300 XL NSv Proximitor Sensor, extension cable and probe between 0°C and +45°C (+32°F to +113°F) at a maximum altitude of 2000 m, with a -24 Vdc power supply, a 10 kΩ load, a Bently Nevada supplied AISI 4140 steel target that is 31 mm (1.2 in) diameter or larger, and a probe gap of 1.0 mm (40 mils). The system accuracy and interchangeability specifications do not apply when using a transducer system calibrated to any target other than a Bently Nevada AISI 4140 steel target.

Electrical

Proximitor Sensor Input	Accepts one non-contacting 3300 RAM or 3300 NSv Proximity Probe and Extension Cable.
Power	Requires -17.5 Vdc to -26 Vdc without barriers at 12 mA maximum consumption, -23 Vdc to -26 Vdc with barriers. Operation at a more positive voltage than -23.5 Vdc can result in reduced linear range.
Supply Sensitivity	Less than 2 mV change in output voltage per volt change in input voltage.
Output resistance	50 Ω
Probe dc Resistance	
Probe Length (m)	Resistance from the Center Conductor to the Outer Conductor (R_{PROBE}) (ohms)
0.5	4.0 ± 0.5
1.0	4.2 ± 0.5
5.0	5.3 ± 0.7
7.0	5.9 ± 0.9
Extension cable dc resistance	Center conductor: 0.220 Ω/m (0.067 Ω/ft) Shield: 0.066 Ω/m (0.020 Ω/ft)
Extension cable capacitance	69.9 pF/m (21.3 pF/ft) typical
Field Wiring	0.2 to 1.5 mm² (16 to 24 AWG)[0.25 to 0.75 mm² (18 to 23 AWG) with ferrules]. Recommend using three-conductor shielded triad cable. Maximum length of 305 meters (1,000 feet) between the 3300 XL NSv Proximitor Sensor and the monitor. See the frequency response graphs Figure 16 and Figure 17 for signal rolloff at high frequencies when using longer field wiring lengths.
Linear Range	1.5 mm (60 mils). Linear range begins at approximately 0.25 mm (10 mils) from target and is from 0.25 to 1.75 mm (10 to 70 mils) (approximately -1 to -13 Vdc).
Recommended Gap Setting	1.0 mm (40 mils)
System performance over ambient temperature range (0°C to 45°C)	
Incremental Scale Factor (ISF)	7.87 V/mm (200 mV/mil) +12.5%/-20% including interchangeability error when measured in increments of 0.25 mm (10 mils) over the 1.5 mm (60 mil) linear range.
Deviation from best fit straight line (DSL)	Less than ±0.06 mm (±2.3 mils).

Frequency Response	0 to 10 kHz: +0, -3 dB typical, with up to 305 meters (1000 feet) of field wiring.
Target Size (flat target)	Minimum: 8.9 mm (0.35 in) diameter Recommended minimum: 13 mm (0.5 in) diameter Axial position measurements on shaft diameters smaller than 13 mm (0.5 in) will generally result in a change in scale factor. Reducing the gap between the probe and target will help limit the change in scale factor. See Figure 12 for additional information.

Shaft Diameter	Minimum (standard X-Y probe configuration): 30 mm (1.2 in) Minimum (X-Y proximity probes offset axially by 23 mm [0.9 in]): 20 mm (0.8 in) Measurements on shaft diameters smaller than 30 mm (1.2 in) usually require close spacing of radial vibration or axial position transducers. This creates the potential for their electromagnetic emitted fields to interact with one another (cross-talk), resulting in erroneous readings. To prevent cross-talk, maintain minimum separation of transducer tips of at least 25 mm (1.0 in) for axial position measurements or 23 mm (0.9 in) for radial vibration measurements. See Figure 14: Probe Cross-talk with Probes Mounted in Parallel and Figure 15: Probe Cross-talk with Probes Mounted in X-Y Configuration. Radial vibration or radial position measurements on shaft diameters smaller than 20 mm (0.8 in) will generally result in greater than a 10% change in Average Scale Factor (ASF). See Figure 13 for additional information.

Counterbore	Minimum: 9.5 mm (0.375 in) Recommended minimum: 13 mm (0.5 in) Counterbores smaller than 13 mm (0.5 in) generally result in a change in scale factor at far gaps. Reducing the gap between the probe and the target will allow the transducer system to maintain its Average Scale Factor (ASF) over a reduced linear range. See Figure 9 for additional information.

Effects of 60 Hz Magnetic Fields Up to 300 Gauss (5 meter system)			
Output voltage in mil pp/gauss			
Gap	Proximitor Sensor	Probe	Ext. Cable
0.25 mm (10 mils)	0.006	0.001	0.001
1.0 mm (40 mils)	0.007	0.002	0.001
1.75 mm (70 mils)	0.008	0.002	0.003

Mechanical

Probe Tip Material	Polyphenylene sulfide (PPS).
Probe Case Material	AISI 304 stainless steel (SST).
Probe Cable Specifications	75 Ω coaxial, fluoroethylene propylene (FEP) insulated probe cable in the following total probe lengths: 0.5, 1, 5, or 7 meters.
Extension Cable Material	75 Ω coaxial, fluoroethylene propylene (FEP) insulated.
Proximitor Sensor Material	A380 aluminum
System Length	5 or 7 meters including extension cable
Extension Cable Armor (optional)	Flexible AISI 302 SST with/without FEP outer jacket.
Tensile Strength (maximum rated)	220 N (50 lb) probe case to probe lead. 220 N (50 lb) at probe lead to extension cable connectors. 220 N (50 lb) probe case to stainless steel armor.
Connector material	Gold-plated brass

Connector-to-connector Torque		
Probe Case Torque	**Maximum Rated**	**Recommended**
1/4-28 or M8X1 probe cases	7.3 N•m (65 in•lb)	5.1 N•m (45 in•lb)
3/8-24 or M10X1 probe cases	33.9 N•m (300 in•lb)	11.3 N•m (100 in•lb)
3/8-24 or M10X1 probe cases – first three threads	22.6 N•m (200 in•lb)	7.5 N•m (66 in•lb)
Reverse mount probes	22.6 N•m (200 in•lb)	7.5 N•m (66 in•lb)

Recommended torque	Finger tight
Maximum torque	0.56 N•m (5 in•lb)

Ordering Information

For the detailed listing of country and product-specific approvals, refer to the *Approvals Quick Reference Guide (108M1756)*.

For additional technical documentation, please log in to bntechsupport.com and access the Bently Nevada Media Library.

3300 NSv Proximity Probes

330901 3300 NSv Probe, 1/4-28 UNF thread, without armor
330902 3300 NSv Probe, 1/4-28 UNF thread, with armor
330908 3300 NSv Probe, 3/8-24 UNF thread, without armor
330909 3300 NSv Probe, 3/8-24 UNF thread, with armor
Part Number-AA-BB-CC-DD-EE
A: Unthreaded Length Option

	Unthreaded length must be at least 0.7 inch less than the case length. Order in increments of 0.1 in Length configurations: Maximum unthreaded length: 9.2 in Minimum unthreaded length: 0.0 in Example: **04** = 0.4 in

B: Overall Case Length Option

	Order in increments of 0.1 in Threaded length configurations: Maximum case length: 9.9 in Minimum case length: 0.8 in Example: **2 4** = 2.4 in

C: Total Length Option	
05	0.5 meter (20 in)
10	1.0 meter (39 in)
50	5.0 meters (16.4 feet)
70	7.0 meters (23.0 feet)
D: Connector and Cable-Type Option	
01	Miniature coaxial ClickLoc connector with connector protector, standard cable
02	Miniature coaxial ClickLoc connector, standard cable
11	Miniature coaxial ClickLoc connector with connector protector, FluidLoc cable
12	Miniature coaxial ClickLoc connector, FluidLoc cable
E: Agency Approval Option	
00	Not required
05	Multiple Approvals

3300 NSv Proximity Probes, Metric

330903 3300 NSv Probe, M8X1 thread, without armor
330904 3300 NSv Probe, M8X1 thread, with armor
330905 3300 NSv Probe, M10X1 thread, without armor

330910 3300 NSv Probe, M10X1 thread, with armor	
Part Number-AA-BB-CC-DD-EE	
A: Unthreaded Length Option	
	Unthreaded length must be at least 20 mm less than the case length. Order in increments of 10 mm. Length configuration: Maximum unthreaded length: 230 mm Minimum unthreaded length: 0 mm Example: **06** = 60 mm
B: Overall Case Length Option	
	Order in increments of 10 mm. Metric thread configurations: Maximum length: 250 mm Minimum length: 20 mm Example: **06** = 60 mm
C: Total Length Option	
05	0.5 meter (20 in)
10	1.0 meter (39 in)
50	5.0 meters (16.4 feet)
70	7.0 meters (23.0 feet)
D: Connector and Cable-Type Option	
01	Miniature coaxial ClickLoc connector with connector protector, standard cable
02	Miniature coaxial ClickLoc connector, standard cable
11	Miniature coaxial ClickLoc connector with connector protector, FluidLoc cable
12	Miniature coaxial ClickLoc connector, FluidLoc cable
E: Agency Approval Option	
00	Not required
05	Multiple Approvals

3300 NSv Reverse Mount Probe

330906-02-12-CC-DD-EE 3/8-24 UNF threads	
330907-05-30- CC-DD-EE M10X1 threads	
C: Total Length Option	
05	0.5 meter (20 in)
10	1.0 meter (39 in)
50	5.0 meters (16.4 feet)
70	7.0 meters (23.0 feet)
D: Connector Option	
02	Miniature coaxial ClickLoc connector, standard cable
12	Miniature coaxial ClickLoc connector, FluidLoc cable
E: Agency Approval Option	
00	Not required

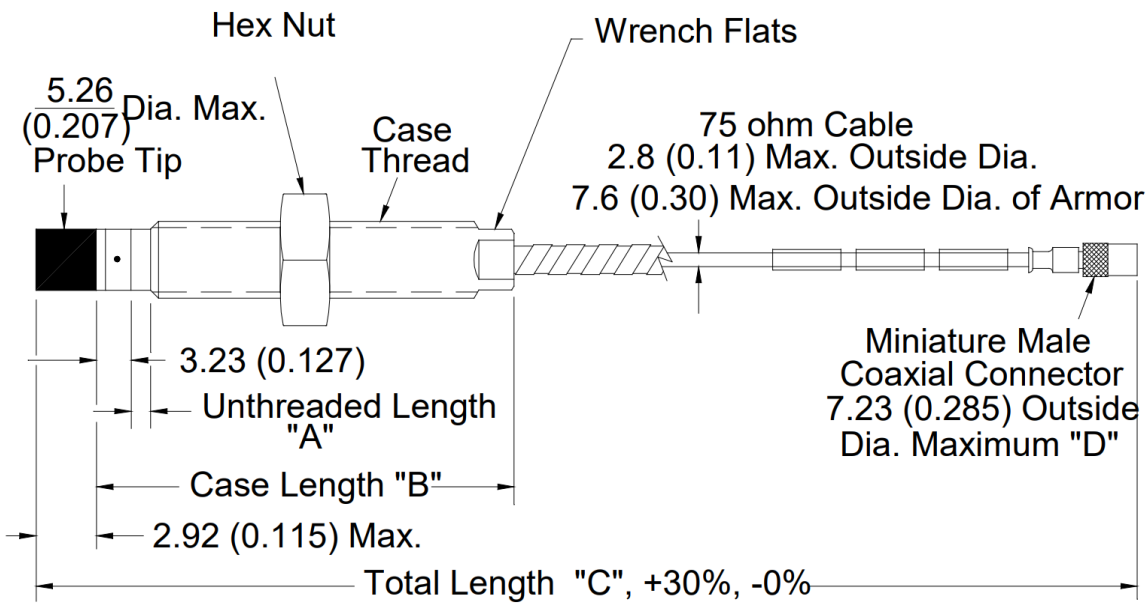

Figure 18: 3300 NSv Proximity probes, Standard Mount

330901, 1/4-28 UNF-2A, without armor

330902, 1/4-28 UNF-2A, with armor

330903, M8X1 thread, without armor

330904, M8X1 thread, with armor

330905, M10X1 thread, without armor

330908, 3/8-24 UNF-2A, without armor

330909, 3/8-24 UNF-2A, with armor

330910, M10X1 thread, with armor

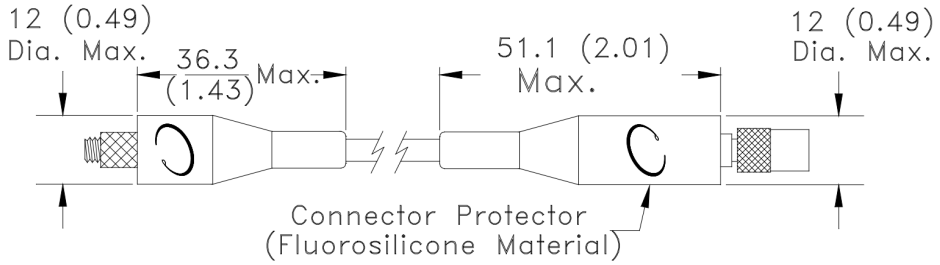

Note: Connector Protector only installed on female end when optioned. Both ends available as accessories.

Figure 19: Installed Connector Protectors