MANUFACTURER DOCUMENT PACKAGE

Manufacturer's Manual

Reference package for procurement and maintenance review

BENTLY NEVADA

330701-00-10-10-02-00

UNARMORED PROXIMITY SENSING PROBE

Used with the applicable 3300 XL 11 mm configuration.

REFERENCE PACKAGE

OFFICIAL DOCUMENT

Selected official manufacturer pages follow this cover.

Source: Bently Nevada 3300 XL 11 mm Datasheet 146256 Rev. T, applicable specification, ordering and dimensional sections.

3300 XL 11 mm Proximity Transducer System

Datasheet

Cordant™

146256 Rev. T

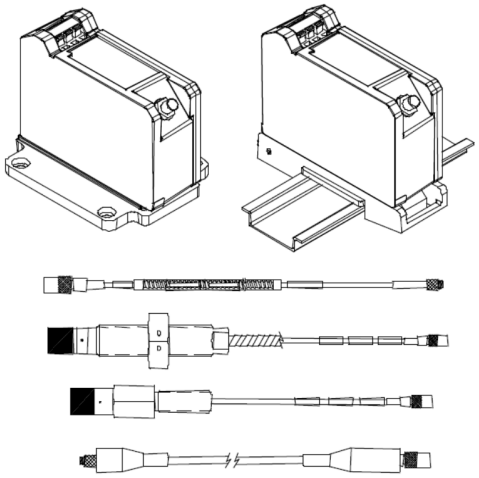

Description

Transducer System

The Bently Nevada™ 3300 XL 11 mm Proximity Transducer System consists of:

- 3300 XL 11 mm probe
- 3300 XL 11 mm extension cable
- 3300 XL 11 mm Proximitor Sensor[1]

The 3300 XL 11 mm Proximity Transducer System has a 3.94 V/mm (100 mV/mil) output for non-contacting vibration and displacement measurements on fluid film bearing machines. The large 11 mm tip enables this transducer system to have a longer linear range compared to our standard 3300 XL 8 mm Transducer System. It is primarily used in the following applications where the longer linear range is necessary:

- Axial (thrust) position measurements
- Ramp differential expansion measurements on steam turbines
- Rod position or rod drop measurements on reciprocating compressors
- Tachometer and zero speed measurements
- Phase reference (Keyphasor) signals

The 3300 XL 11 mm Proximitor Sensor is designed to replace the 7200-series 11 mm and 14 mm Transducer Systems. When upgrading from the 7200-series system to the 3300 XL 11 mm system, every component must be replaced with 3300 XL 11 mm components. In addition, the monitoring system must be updated. If using a 3500 Monitoring System, an updated version of the configuration software that lists the 3300 XL 11 mm Transducer System as a compatible option is required.

Baker Hughes

Specifications

Unless otherwise noted, the following specifications are for a 3300 XL 11 mm Proximitor Sensor, extension cable and probe between 0°C and +45°C (+32°F to +113°F) at a maximum altitude of 2000m, with a -24 Vdc power supply, a 10 kΩ load, our supplied AISI 4140 steel target that is 31 mm (1.2 in) diameter or larger, and a probe gap of 2.5 mm (100 mils). The system accuracy and interchangeability specifications do not apply when using a transducer system calibrated to any target other than our AISI 4140 steel target.

Electrical

Proximitor Sensor	
Input	Accepts one non-contacting 3300 XL 11 mm Proximity Probe and Extension Cable.
Power	Requires -17.5 Vdc to -26 Vdc without barriers at 12 mA maximum consumption, -23 Vdc to -26 Vdc with barriers. Operation at a more positive voltage than -23.5 Vdc can result in reduced linear range.
Supply Sensitivity	Less than 2 mV change in output voltage per volt change in input voltage.
Output resistance	50 Ω

Probe dc Resistance	
Probe Length (m)	Resistance from the Center Conductor to the Outer Conductor (R_{PROBE}) (ohms)
1.0	5.9 ± 0.5
5.0	7.2 ± 0.8
9.0	8.5 ± 1.1

Extension Cable dc Resistance		
Length of Extension Cable (m)	Resistance from Center Conductor to Center Conductor (R_{CORE}) (ohms)	Resistance from Coaxial Conductor to Coaxial Conductor (R_{JACKET}) (ohms)
4.0	1.0 ± 0.25	0.3 ± 0.1
8.0	2.0 ± 0.5	0.6 ± 0.2

Extension cable capacitance	69.9 pF/m (21.3 pF/ft) typical
Field wiring	0.2 to 1.5 mm² (16 to 24 AWG) [0.25 to 0.75 mm² (18 to 23 AWG) with ferrules]. Recommend using three-conductor shielded triad cable. Maximum length of 305 meters (1,000 feet) between the 3300 XL Proximitor Sensor and the monitor. See the frequency response graph for signal rolloff at high frequencies when using longer field wiring lengths.
Linear Range	4.0 mm (160 mils). Linear range begins at approximately 0.5 mm (20 mils) from target and is from 0.5 to 4.5 mm (20 to 180 mils) (approximately –1 to –17 Vdc). Extended Deviation from Straight Line (DSL) range is from approximately 0.5 to 5.0 mm (20 to 200 mils) (–1 to –19 Vdc). The extended DSL range is not applicable when using zener barriers.
Recommended Gap Setting	2.5 mm (100 mils)

Incremental Scale Factor (ISF)	3.94 V/mm (100 mV/mil) ±10% including interchangeability error when measured in increments of 0.5 mm (20 mils) over the 4.0 mm (160 mil) linear range.
Deviation from best fit straight line (DSL)	
Standard DSL range	Less than ±0.10 mm (±4 mils).
Extended DSL range	Less than ±0.15 mm (±6 mils).
System Performance over extended temperatures	Over a probe temperature range of -35°C to +120°C (-31°F to +248°F) with the Proximitor Sensor and extension cable between 0°C to +45°C (+32°F to +113°F), the ISF remains within ±25% of 3.94 V/mm (100 mV/mil), the DSL remains within ±0.51 mm (±20 mils) and the extended range DSL remains within ±0.59 mm (±23 mils) Over a Proximitor Sensor and extension cable temperature range of -35°C to +65°C (-31°F to +149°F) with the probe between 0°C to +45°C (+32°F to +113°F), the ISF remains within ±25% of 3.94 V/mm (100 mV/mil), the DSL remains within ±0.51 mm (±20 mils) and the extended range DSL remains within ±0.59 mm (±23 mils)
Frequency Response	0 to 8 kHz: +0, -3 dB typical, with up to 305 meters (1000 feet) of field wiring.

Cross-talk Limitation:	
Target Size - Flat Surface	
Diameter	
Recommended Minimum	30.5 mm (1.2 in)
Shaft Diameter	
Recommended Minimum	152 mm (6.0 in)

When operating below recommended limits, there will be cross-talk between the probes. To minimize this effect, close the gap as much as possible while still keeping the needed linear range.

A shaft diameter of 76.2 mm (3.0 in) can keep the cross-talk below 50 mV by having the minimum separation of transducer tips; it needs to be at least 64 mm (2.5 in) for axial position measurements and 58 mm (2.3 in) for radial vibration measurements.

Many factors affect the cross-talk when operating below the recommended limit. Consult Performance Specification, document 144979 for additional information.

Effects of 60 Hz Magnetic Fields Up to 300 Gauss (5 meter system)			
Output voltage in mil pp/gauss			
Gap	**Proximitor Sensor**	**Probe**	**Ext. Cable**
0.5 mm (20 mil)	0.006	0.001	0.001
2.5 mm (100 mil)	0.033	0.009	0.005
4.6 mm (180 mil)	0.033	0.027	0.007

Mechanical

Probe Tip Material	Polyphenylene sulfide (PPS).
Probe Case Material	AISI 304 stainless steel (SST).
Probe Cable Specification	75 Ω triaxial, fluoroethylene propylene (FEP) insulated probe cable in the following total probe lengths: 1, 5 or 9 meters.
Extension Cable Material	75 Ω triaxial, fluoroethylene propylene (FEP) insulated.
Proximitor Sensor Material	A380 aluminum
System Length	5 or 9 meters including extension cable
Extension Cable Armor (optional)	Flexible AISI 302 SST with FEP outer jacket.
Tensile Strength (maximum rated)	330 N (75 pounds) probe case to probe lead. 270 N (60 pounds) at probe lead to extension cable connectors.
Connector Material	Gold-plated brass

Probe Case Torque		
	Maximum Rated	Recommended
1/2-20 and 5/8-18 probe cases	45.2 N•m (400 in•lb)	15.2 N•m (133 in•lb)
M14x1.5 and M16x1.5 probe cases	63.3 N•m (560 in•lb)	21.1 N•m (187 in•lb)
Reverse mount probes	22.6 N•m (200 in•lb)	7.5 N•m (66 in•lb)

Connector-to-connector torque	
Recommended torque	Finger tight
Maximum torque	0.565 N•m (5 in•lb)
Minimum Bend Radius (with or without SST armor)	25.4 mm (1.0 in)

System Weight (typical)	
Probe	
70 g (2.5 oz) (minimum length case, 1m lead, no armor) 170 g (6.0 oz) (minimum length case, 1m lead, with armor) For longer case lengths add 1.1 g/mm (1.0 oz/in). For 5 m probe length add 180 g (6 oz) for non-armored probe or 560 g (20 oz) for armored probe. For 9 m probe length add 360 g (12 oz) for non-armored probe or 1120 g (40 oz) for armored probe.	
Extension Cable	45 g/m (0.5 oz/ft)
Armored Extension Cable	140 g/m (1.5 oz/ft)
Proximitor Sensor	255 g (9 oz)

Thread Engagement Limits

Probe Case Thread	Maximum Length of Thread Engagement
1/2-20	0.750 in
5/8-18	0.938 in

Ordering Information

For the detailed listing of country and product-specific approvals, refer to the *Approvals Quick Reference Guide (108M1756)*.

For additional technical documentation, please log in to bntechsupport.com and access the Bently Nevada Media Library.

3300 XL 11 mm Proximity Probes

330701 3300 XL 11 mm Probe, 1/2-20 UNF thread, without armor	
330702 3300 XL 11 mm Probe, 1/2-20 UNF thread, with armor	
330707 3300 XL 11 mm Probe, 5/8-18 UNF thread, without armor	
330708 3300 XL 11 mm Probe, 5/8-18 UNF thread, with armor	
Part Number-AA-BB-CC-DD-EE-	
A:Unthreaded Length Option	
	Unthreaded length must be at least 1.0 inch less than the case length. Order in increments of 0.1 in Length configurations: **Maximum unthreaded length:** 8.9 in **Minimum unthreaded length:** 0.0 in Example: **0 4** = 0.4 in
B: Overall Case Length Option	
	Order in increments of 0.1 in Threaded length configurations: **Maximum case length**: 9.9 in **Minimum case length**: 1.0 in Example: **2 4** = 2.4 in
C: Total Length Option	
10	1.0 meter (3.3 feet)
50	5.0 meters (16.4 feet)
90	9.0 meters (29.5 feet) Five meter probes are designed for use with the five meter Proximitor Sensor only.
D: Connector and Cable-Type Option	
01	Miniature coaxial ClickLoc connector with connector protector, standard cable
02	Miniature coaxial ClickLoc connector, standard cable
11	Miniature coaxial ClickLoc connector with connector protector, FluidLoc cable
12	Miniature coaxial ClickLoc connector, FluidLoc cable
E: Agency Approval Option	
00	Not required
05	Multiple Approvals

3300 XL 11 mm Proximity Probes, Metric

330703 3300 XL 11 mm Probe, M14 x 1.5 thread, without armor
330704 3300 XL 11 mm Probe, M14 x 1.5 thread, with armor
330709 3300 XL 11 mm Probe, M16 x 1.5 thread, without armor
330710 3300 XL 11 mm Probe, M16 x 1.5 thread, with armor
Part Number-AAA-BBB-CC-DD-EE

A:Unthreaded Length Option	
	Unthreaded length must be at least 26 mm less than the case length. Order in increments of 2 mm. Length configuration: **Maximum unthreaded length**: 224 mm **Minimum unthreaded length**: 0 mm Example: **0 6 0** = 60 mm
B: Overall Case Length Option	
	Order in increments of 2 mm. Metric thread configurations: **Maximum length:**250 mm **Minimum length:**26 mm Example: **0 6 0** = 60 mm
C: Total Length Option	
10	1.0 meter (3.3 feet)
50	5.0 meters (16.4 feet)
90	9.0 meters (29.5 feet) Five meter probes are designed for use with the five meter Proximitor Sensor only.
D: Connector and Cable-Type Option	
01	Miniature coaxial ClickLoc connector with connector protector, standard cable
02	Miniature coaxial ClickLoc connector, standard cable
11	Miniature coaxial ClickLoc connector with connector protector, FluidLoc cable
12	Miniature coaxial ClickLoc connector, FluidLoc cable
E: Agency Approval Option	
00	Not required
05	Multiple Approvals

3300 XL 11 mm Reverse Mount Probe

330705-02-18- CC-DD-EE 3/8-24 UNF threads	
330706-005-046- CC-DD-EE M10 x 1 threads	
C: Total Length Option	
10	1.0 meter (3.3 feet)
50	5.0 meters (16.4 feet)
90	9.0 meters (29.5 feet) Five meter probes are designed for use with the five meter Proximitor Sensor only.
D: Connector Option	
02	Miniature ClickLoc coaxial connector
E: Agency Approval Option	
00	Not required
05	Multiple Approvals

For a shorter delivery time, order commonly stocked probes. Currently, stocked probes consist of the following part numbers: 330701-00-10-10-02-00, 330701-00-20-10-02-00, 330703-000-050-10-02-00, 330705-02-18-10-02-00, 330706-005-046-10-02-00.

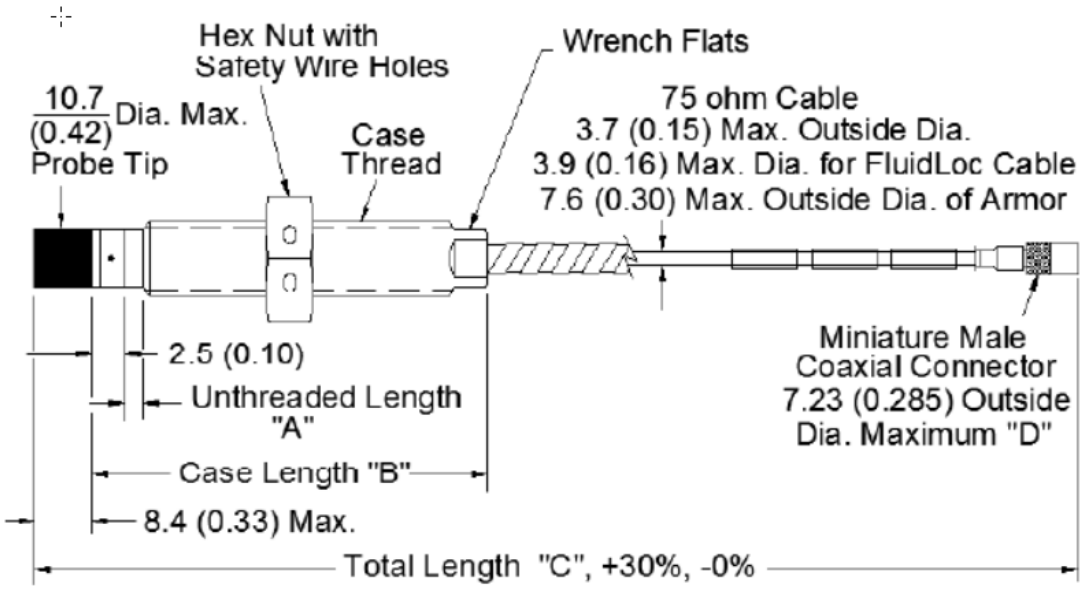

Figure 11: 3300 XL 11 mm Proximity probes, Standard Mount

330701, ½-20 UNF-2A, without armor
330702, ½-20 UNF-2A, with armor
330703, M14X1.5 thread, without armor
330704, M14X1.5 thread, with armor
330707, 5/8-18 UNF-2A, without armor
330708, 5/8-18 UNF-2A, with armor
330709, M16X1.5 thread, without armor
330710, M16X1.5 thread, with armor

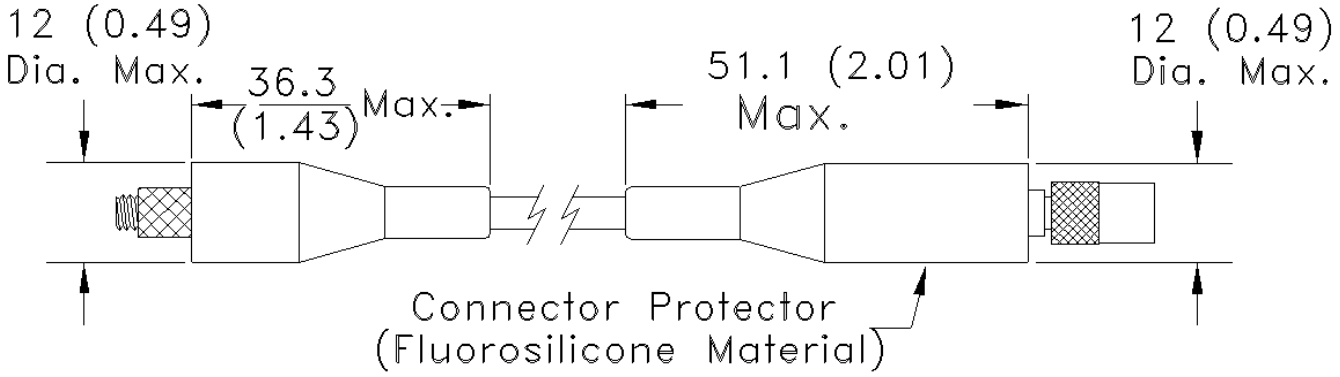

Note: Connector Protector only installed on female end when optioned. Both ends available as accessories.

Figure 12: Installed Connector Protectors