MANUFACTURER DOCUMENT PACKAGE

# Manufacturer's Manual

Reference package for procurement and maintenance review

BENTLY NEVADA

## 330173-00-06-10-02-00

**UNARMORED PROXIMITY SENSING PROBE**

Used with the applicable 3300 5 mm configuration.

REFERENCE PACKAGE

OFFICIAL DOCUMENT

Selected official manufacturer pages follow this cover.

Source: Bently Nevada 3300 5 mm Datasheet 172036 Rev. T, applicable specification, ordering and dimensional sections.

# 3300 5 mm Transducer System

## Datasheet

Cordant™

172036 Rev. T

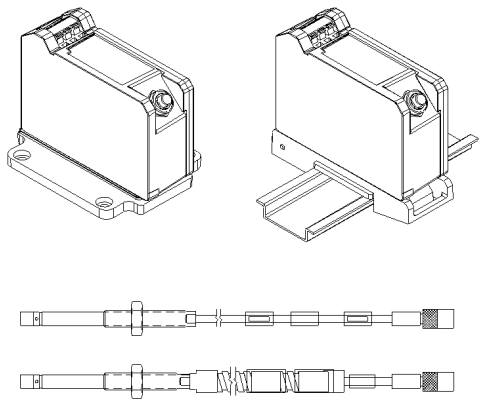

## Description

### Transducer System

The 3300 5 mm Proximity Transducer System consists of:

- a 3300 5 mm probe [1, 2]
- a 3300 XL extension cable (ref 141194-01)
- a 3300 XL Proximitor Sensor [3, 4, 5] (ref 141194-01)

When combined with a 3300 XL Proximitor Sensor and XL extension cable, the system provides an output voltage that is directly proportional to the distance between the probe tip and the observed conductive surface. The system can measure both static (position) and dynamic (vibration) data. Its primary use is in vibration and position measurement applications on fluid-film bearing machines, as well as Keyphasor measurement and speed measurement applications[6].

The system provides an accurate, stable signal output over a wide temperature range. All 3300 XL Proximity Transducer Systems achieve this level of performance with complete interchangeability of probe, extension cable, and Proximitor sensor, eliminating the need for individual component matching or bench calibration.

### Proximity Probe

The 3300 5 mm probe improves upon previous designs. A patented TipLoc molding method provides a more robust bond between the probe tip and the probe body. The 3300 5 mm system is orderable with Fluidloc cable options for preventing oil and other liquids from leaking out of the machine through the cable's interior.

Baker Hughes

# Specifications

Unless otherwise noted, the following specifications are for a proximity transducer system between +18°C and +27°C (+64°F to +80°F) with a -24 Vdc power supply, a 10 kW load, an AISI 4140 steel target, and a probe gapped at 1.27 mm (50 mils).

## Electrical

| | |
|---|---|
| XL Proximitor Sensor Input | Accepts one noncontacting 33005 mm Proximity Probe and XL Extension Cable. |
| Power | Requires -17.5 Vdc to -26 Vdc at 12 mA maximum consumption. Operation at a more positive voltage than -23.5 Vdc can result in reduced linear range. |
| Supply Sensitivity | Less than 2 mV change in output voltage per volt change in input voltage. |
| Output Resistance | 50 W |

| Probe DC Resistance | |
|---|---|
| **Probe Length (m)** | **Resistance from the Center Conductor to the Outer Conductor (Ω)** |
| 0.5 | 7.45 ± 0.50 |
| 1.0 | 7.59 ± 0.50 |
| 1.5 | 7.73 ± 0.50 |
| 2.0 | 7.88 ± 0.50 |
| 5.0 | 8.73 ± 0.70 |
| 9.0 | 9.87 ± 0.90 |

| Extension Cable DC Resistance | | |
|---|---|---|
| **Length of Extension Cable (m)** | **Resistance from Center Conductor to Center Conductor ($R_{CORE}$) (Ω)** | **Resistance from Outer Conductor to Outer Conductor ($R_{JACKET}$) (Ω)** |
| 3.0 | 0.66 ± 0.10 | 0.20 ± 0.04 |
| 3.5 | 0.77 ± 0.12 | 0.23 ± 0.05 |
| 4.0 | 0.88 ± 0.13 | 0.26 ± 0.05 |
| 4.5 | 0.99 ± 0.15 | 0.30 ± 0.06 |
| 7.0 | 1.54 ± 0.23 | 0.46 ± 0.09 |
| 7.5 | 1.65 ± 0.25 | 0.49 ± 0.10 |
| 8.0 | 1.76 ± 0.26 | 0.53 ± 0.11 |
| 8.5 | 1.87 ± 0.28 | 0.56 ± 0.11 |

Outer conductor refers to the shielded conductor that is attached to the connector, not the armor braid.

| | |
|---|---|
| **Extension Cable Capacitance** | 69.9 pF/m (21.3 pF/ft) typical. |
| Field Wiring | Recommend using 3-conductor shielded triad cable 0.2 mm to 1.5 mm (16 AWG to 24 AWG). 305 meters(1,000 feet) maximum length between 3300 XL Proximity Transducer and monitor. Consult Performance Specification, document 155687, for signal rolloff at high frequencies when using longer field wiring lengths or external safety barriers located some distance from the monitoring system. |

| | |
|---|---|
| Linear Range | 2 mm (80 mils). Linear range begins at approximately 0.25 mm (10 mils) from target and is from 0.25 to 2.3 mm (10 to 90 mils). |
| Recommended Gap Setting | 1.27 mm (50 mils). |
| Incremental Scale Factor | 7.87 V/mm (200 mV/mil) ±6.5% typical, including interchangeability error when measured in increments of 0.25mm (10 mils) over the linear range. |
| Deviation from Best Fit Straight Line (DSL) | Less than ±0.038 mm (±1.5 mil) typical deviation from best fit straight line. |
| Probe Temperature Stability (typical) | Over probe temperature range of -35°C to +177°C (-31°F to +350°F), the incremental scale factor remains within ±10% of 7.87 V/mm (200 mV/mil) and the deviation from the best fit straight line remains within ±0.076 mm (±3 mils). |
| **Frequency Response** | 0 to 10 kHz: +0, -3 dB, with up to 305 meters (1000 feet) of field wiring. |
| Minimum Target Size | 15.2 mm (0.6 in) diameter (flat target) |
| **Shaft Diameter** | |
| Minimum | 50.8 mm (2 in) |
| Recommended minimum | 76.2 mm (3 in) |

When gapped at the center of the linear range, the interaction between 2 separate transducer systems (cross-talk) will be less than 50 mV on shaft diameters of at least 50 mm (2 in) or greater. Care should be taken to maintain minimum separation of transducer tips, generally at least 40 mm (1.6 in) for axial position measurements or 38 mm (1.5 in) for radial vibration measurements to limit cross-talk to 50 mV or less. Radial vibration or position measurements on shaft diameters smaller than 76.2 mm (3 in) will generally result in a change in scale factor. Consult Performance Specification 155687 for additional information.

## Effects of 60 Hz Magnetic Fields Up to 300 Gauss

| Output Voltage in Mil (pk-pk)/Gauss (5-Meter System) | | | |
|---|---|---|---|
| **Gap** | **XL Proximitor Sensor** | **Probe** | **XL Ext. Cable** |
| 10 mil | 0.0119 | 0.0004 | 0.0004 |
| 50 mil | 0.0131 | 0.0014 | 0.0014 |
| 90 mil | 0.0133 | 0.0045 | 0.0045 |

## Electrical Certification

Complies with the European CE mark.

## Mechanical

| | |
|---|---|
| Probe Tip Material | Polyphenylene sulfide (PPS) |
| Probe Case Material | AISI 303 or 304 stainless steel (SST) |
| Probe Cable | 75 Ω triaxial, fluoroethylene propylene (FEP) insulated probe cable in the following lengths: 0.5, 1, 2, 5, or 9 meters (1.6, 3.3, 16.4, or 29.5 feet) |
| System Length | 5 or 9 meters (16.4 or 29.5 feet) including extension cable |
| Extension Cable Material | 75 W triaxial, fluoroethylene propylene (FEP) insulated |
| Probe and Extension Cable Armor | Flexible AISI 302 or 304 SST with FEP outer jacket |

| | |
|---|---|
| 5mm Probe Tensile Strength | 222 N (50 lbf) probe case to probe lead. 222 N (50 lbf) probe lead to extension cable connectors |
| Connector material | Gold-plated brass or gold-plated beryllium copper |
| Probe case torque | 5.1 N·m (45in·lb) recommended 7.3 N·m (65 in·lb) maximum |
| Connector-to-connector torque | Refer to the table below: Recommended Torque |
| Maximum torque | 0.565 N·m (0.42 ft•lbf) |
| Minimum Cable Bend Radius | 25.4 mm (1.0in) |
| **Weight** | |
| Total System | 0.71 kg (1.6 lb), typical |
| 3300 5mm Probe | 323 g (11.39 oz). |
| XL Extension Cable | 34 g/m (0.4 oz/ft) 103 g/m (1.5 oz/ft) (armored) |
| XL Proximitor Sensor | 246 g (8.7 oz) |

| Recommended Torque | |
|---|---|
| **Connector Type** | **Tightening Instructions** |
| 2 3300 XL gold "click" type connectors | Finger tight |
| 1 non-XL stainless steel connector and 1 3300 XL connector | Finger tight plus 1/8 turn using pliers |

## Thread Engagement Limits

| Probe Case Thread | Maximum Length of Thread Engagement |
|---|---|
| **1/4-28** | 0.375 in |
| **M8x1** | 12 mm |

Maximum thread engagement lengths are per the industry standard of 1.5 times the nominal thread diameter. A fit class matching that of the external probe thread is assumed for all internal threads. Applications with thread engagement lengths exceeding the values in the table above may exhibit binding during installation. Contact your Bently Nevada representative if you require probe thread engagement lengths exceeding the values above. Bently Nevada does not replace proximity probes under warranty due to excessive thread engagement lengths.

When drilling and tapping a mounting hole **for a 1/4-28 probe**, a **#3 or larger tap drill** is recommended.

## Environmental Limits

| | |
|---|---|
| Probe Temperature Range | -35°C to +177°C (-31°F to +351°F) |

Exposing the probe to temperatures below –34°C (-30°F) may cause premature failure of the pressure seal.

| | |
|---|---|
| Extension Cable Temperature Range | -51°C to +177°C (-60°F to +351°F) for standard extension cable. ref 141194-01 |

# Ordering Information

For the detailed listing of country and product-specific approvals, refer to the *Approvals Quick Reference Guide (108M1756)*.

For additional technical documentation, please log in to bntechsupport.com and access the Bently Nevada Media Library.

## 3300 5mm Proximity Probes

### 330171 3300 5mm Probe, 1/4-28 UNF thread, without armor

### 330172 3300 5mm Probe, 1/4-28 UNF thread, with armor

| Part Number-AA-BB-CC-DD-EE | |
|---|---|
| **A: Unthreaded Length Option** | |

Unthreaded length must be at least 0.8 in. less than the case length. Order in increments of 0.1 in.

**Length configurations:** Maximum unthreaded length:
**8 8** = 8.8 in. Minimum unthreaded length:
**0 0** = 0.0 in.
**Example: 0 4** = 0.4 in.

| **B: Overall Case Length Option** | |
|---|---|
| Order in increments of 0.1 in. **Threaded Length configurations:**<br>Maximum unthreaded length: **9 6** = 9.6 in.<br>Minimum unthreaded length: **0 8** = 0.8 in.<br>**Example:2 4** = 2.4 in. | |
| **C: Total Length Option** | |
| 0 5 | 0.5 meter (1.6 feet) |
| 1 0 | 1.0 metre (3.3 feet) |
| 2 0 | 2.0 metres (6.6 feet) |
| 5 0 | 5.0 metres (16.4 feet)[1] |
| 9 0 | 9.0 metres (29.5 feet) |
| **D: Connector Option** | |
| 0 1 | Miniature coaxial ClickLoc connector with connector protector, standard cable |
| 0 2 | Miniature coaxial ClickLoc connector, standard cable |
| 1 1 | Miniature coaxial ClickLoc connector with connector protector, FluidLoc cable |
| 1 2 | Miniature coaxial ClickLoc connector, FluidLoc cable |
| **E: Agency Approval Option** | |
| 0 0 | Agency Approval Option |
| 0 5 | Multiple Approvals |

## 3300 5mm Proximity Probes, Metric

### 330173 3300 5mm Probe, M8 x 1 thread, without armor

### 330174 3300 5mm Probe, M8 x 1 thread, with armor

| **Part Number-AA-BB-CC-DD-EE** |
|---|
| **A: Unthreaded Length Option** |

Unthreaded length must be at least 20mm less than the case length. Order in increments of 10mm.

**Length configurations:** |
Maximum unthreaded length: **2 3** = 230mm
Minimum unthreaded length: **0 0** = 0.0mm
**Example: 0 6** = 60mm

| B: Overall Case Length Option | |
|---|---|
| Order in increments of 10mm<br>**Metric thread configurations:**<br>Maximum unthreaded length: **2 5** = 250mm<br>Minimum unthreaded length: **0 2** = 20mm<br>**Example:0 6** = 60mm | |
| **C: Total Length Option** | |
| **0 5** | 0.5 meter (1.6 feet) |
| **1 0** | 1.0 metre (3.3 feet) |
| **2 0** | 2.0 metres (6.6 feet) |
| **5 0** | 5.0 metres (16.4 feet)[1] |
| **9 0** | 9.0 metres (29.5 feet) |
| **D: Connector Option** | |
| **0 1** | Miniature coaxial ClickLoc connector with connector protector, standard cable |
| **0 2** | Miniature coaxial ClickLoc connector, standard cable |
| **1 1** | Miniature coaxial ClickLoc connector with connector protector, FluidLoc cable |
| **1 2** | Miniature coaxial ClickLoc connector, FluidLoc cable |
| **E: Agency Approval Option** | |
| **0 0** | Agency Approval Option |
| **0 5** | Multiple Approvals |

## Ordering Information for Proximitor Sensor

### 3300 XL Proximitor Sensor

**330180-AA-BB**

| A: Total Length and Mounting Option | |
|---|---|
| **10** | 1.0 meter (3.3 feet) system length, panel mount |
| **11** | 1.0 meter (3.3 feet) system length, DIN mount |
| **12** | 1.0 meter (3.3 feet) system length,no mounting hardware |
| **50** | 5.0 meters (16.4 feet) system length, panel mount |
| **51** | 5.0 meters (16.4 feet) system length, DIN mount |
| **52** | 5.0 meters (16.4 feet) system length, no mounting hardware |
| **90** | 9.0 meters (29.5 feet) system length, panel mount |
| **91** | 9.0 meters (29.5 feet) system length, DIN mount |
| **92** | 9.0 meters (29.5 feet) system length, no mounting hardware |
| **B: Agency Approval Option** | |
| **00** | Not required |
| **05** | CSA, ATEX, IECEx Approvals |

## Ordering Information for Extension Cables

### 3300 XL Standard Extension Cable

**330130-AAA-BB-CC**

Make sure that the extension cable length and the probe length, when added together, equal the Proximitor Sensor total length.

| A: Cable Length Option | |
|---|---|
| **030** | 3.0 meters (9.8 feet) |
| **035** | 3.5 meters (13.1 feet) |
| **040** | 4.0 meters (11.5 feet) |
| **045** | 4.5 meters (14.8 feet) |

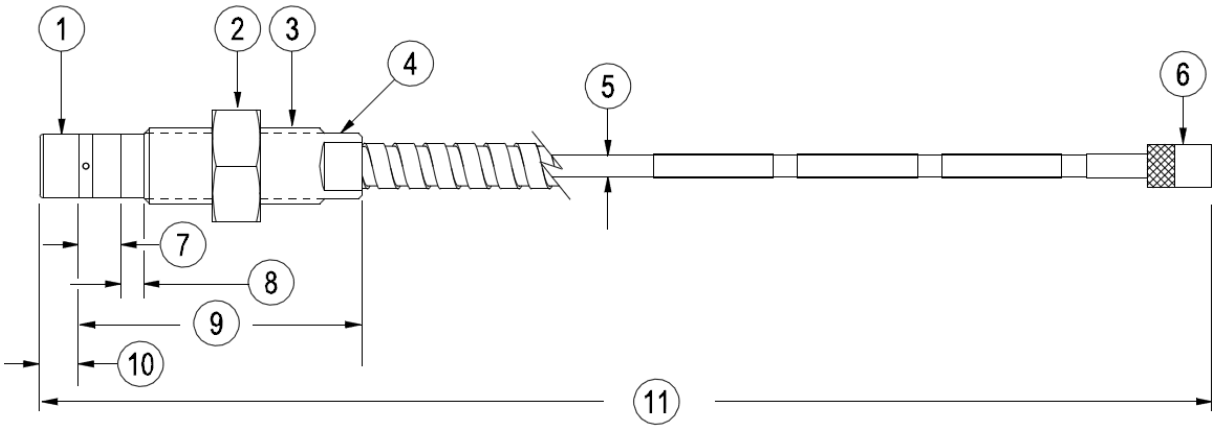


1. Probe tip, 5.2mm [0,21 in] diameter
2. 11.1 mm [7/16in] for 1/4-28 threads, 13.0mm [0.51in] for M8 thread. See Note 3.
3. Case thread
4. 5.6 [7/32] wrench flats for 1/4-28 threads, 7.0 [0.28] for M8 threads
5. 75Ω cable, 2.8mm [0.11 in] maximum outside diameter, 7.6mm [0.3 in] outside diameter of armor, 9.0mm [0.35in] maximum diameter of armor ferrule.
6. Miniature male coaxial connector, 7.23mm [0.285 in] maximum outside diameter “D”
7. 3.2 [0.13in]
8. Unthreaded length “A”
9. Case length “B”
10. 6.0mm [0.235in] maximum
11. Total length “C”, =30%, -0%. See Note.

**Figure 3: 3300 5mm Proximity Probes, Standard Mount3**

330171, 1/4-28 UNF-2A, without armor[7]

330172, 1/4-28 UNF-2A, with armor[6]

330173, M8X1 thread, without armor[7]

330174, M8X1 thread, with armor[6]