MANUFACTURER DOCUMENT PACKAGE

Manufacturer's Manual

Reference package for procurement and maintenance review

BENTLY NEVADA

9200-09-01-06-04

MOVING-COIL VELOCITY SENSING TRANSDUCER

Used with the applicable 9200 Seismoprobe configuration.

REFERENCE PACKAGE

OFFICIAL DOCUMENT

Selected official manufacturer pages follow this cover.

Source: Bently Nevada 9200 Seismoprobe Datasheet 141626 Rev. V, applicable specification, ordering and dimensional sections.

9200 and 74712 Seismoprobe Velocity Transducers

Datasheet

Cordant™

141626 Rev. V



Description

Bently Nevada™ Seismoprobe Velocity Transducer Systems are designed to measure absolute (relative to free space) bearing housing, casing, or structural vibration. The two-wire systems consist of a transducer and appropriate cable.

The Seismoprobe family of velocity transducers is a two-wire design that uses moving-coil technology. It provides a voltage output directly proportional to the transducer's vibration velocity.

Moving-coil transducers are less sensitive to impact or impulsive excitation than solid-state velocity transducers, which are inherently accelerometers with embedded integration electronics.

Moving-coil transducers are less sensitive to impact or impulsive excitation and can represent a good choice for certain applications. Because they don't require external power, they are convenient for portable measurement applications.

For most installations, Bently Nevada's Velomitor family of velocity transducers, which incorporate solid-state technology, provide improved performance and ruggedness for casing velocity measurement applications.

Baker Hughes

Available Types

Two types of Seismoprobe Velocity Transducer are available:

- 9200: The 9200 is a two-wire transducer suitable for continuous monitoring or for periodic measurements in conjunction with test or diagnostic instruments. When ordered with the integral cable option, the 9200 has excellent resistance to corrosive environments without need of additional protection.
- 74712: The 74712 is a high temperature version of the 9200.

Interconnect cables are available for connecting the 9200 and 74712 transducers to other instruments. These cables are available in various lengths with or without stainless steel armor.

When ordering the 9200 and 74712 Seismoprobe Velocity Transducers, expect approximately a six week lead time. That lead time can vary based on component availability and configuration. For projected lead times for your specific order, contact your local Bently Nevada representative.

Most common machine malfunctions (unbalance, misalignment, etc.) occur on the rotor and originate as an increase (or at least a change) in rotor vibration. For any individual casing measurement to be effective for overall machine protection, the system must continually transmit a significant amount of rotor vibration to the machine casing, or mounting location of the transducer.

In addition, be careful to install the accelerometer transducer on the bearing housing or machine casing. Improper installation may decrease the transducer amplitude and frequency response and/or generate false signals that do not represent actual vibration. Refer to the appropriate instruction manuals and

Application Notes.

Upon request, Bently Nevada provides engineering services that can identify the appropriate machine housing measurements and installation assistance if needed.

Specifications

Specifications are at approximately +22°C (+72°F) with 25 mm/s (1 in/s) of machine casing vibration at 100 Hz (6000 cpm) with a 10 kΩ load unless otherwise specified.

Electrical

Sensitivity	20 mV/mm/s (500 mV/in/s), ±5% when properly terminated and oriented at the angle of calibration.
Calibration Load	10 kΩ Terminal "A" to "B" Output taken across pins "A" and "B"
Sensitivity Temperature Coefficient	0.2%/°C
Frequency Response-See Theoretical Velocity Seismoprobe Frequency Response on page 11.	4.5 to 1000 Hz (270 to 60,000 CPM); +0, -3dB typical. 10 to 1000 Hz (600 to 60,000 CAM); +0, -3dB typical. 15 to 1000 Hz (900 to 60,000 CPM); +0, -3dB typical.
Frequency response	From minimum operating frequency (see Ordering Information) to 1 kHz (60,000 cpm); +0, -3dB typical. Please contact Bently Nevada for detailed calibration data.
Dynamic operating range	2.54 mm (0.100 in) peak to peak maximum displacement.
Velocity Range	25 mm/s (1 in/s) (at +22 °C of casing vibration at 100 Hz with a 10 kΩ load.
Coil Resistance	1.25 kΩ ±5%
Locked Coil Inductance	125 mH, typical
Amplitude Linearity	±5% from 0.01 to 5.0 in/s (0.254 to 127 mm/s) at 100Hz (6000CPM)
Shock resistance	Withstands 50 g peak maximum acceleration along non-sensitive axis.
Transverse sensitivity	±10% maximum of the sensitive axis sensitivity at 100 Hz and 1.0 in/s (2.54 cm/s)
Polarity of output signal	Pin A goes positive with respect to Pin B when the transducer case velocity is towards the connector.
Lead wire length	305 meters (1,000 feet) maximum between Seismoprobe Velocity Transducer and 3300 or Bently Nevada™ 3500 Monitor. Consult manual for frequency roll-off at longer lengths.

Environmental Limits

Operating and Storage Temperature:	9200: -29°C to +121°C (-20°F to +250°F). 74712: -29°C to +204°C (-20°F to +400°F).
Environment	Dust and moisture resistant. Contact your Sales Professional regarding transducer operation in a radiation environment.
Relative Humidity	To 95%, noncondensing. 100%, non-submerged, when ordered with integral cable.
Maximum Use Altitude	2000 m (6,561 ft) above sea level.

Standard installation for these sensors is in a protected enclosure with wiring protected in conduit. Splash boots can be added for additional protection if needed by customer's requirements.

Mechanical

Case and Adapter Material	Anodized aluminum A204
Gasket Material	9200: Neoprene 74712: Silicone
Connector Material	
Top and Side Mount Options	Cadmium-plated aluminum, neoprene, and silver-plated copper
Terminal Block Option	Polyphenylene Sulfide with nickel-plated copper contacts.
Mounting Torque	
1/2-20, 1/4-20, 1/4-28, 5/8-18, or M10X1 mounting base options:	5.6 N•m (50 in•lb)
8-32 threaded studs	1.41 N•m (12.5 in•lb)

Physical

Height	102 mm (4 in) typical (depending on connector option).
Diameter	41 mm (1.6 in) typical.
Weight	9200 = 300 grams (10.5 ounces) typical. 74712 = 480 grams (17 ounces) typical.
Seismoprobe Velocity Transducer orientation	All Seismoprobe Velocity Transducers are specified for mounting orientation (see Graphs and Figures on page 11).

Ordering Information

For the detailed listing of country and product specific approvals, refer to the Approvals Quick Reference Guide (document 108M1756) at Bently.com.

An isolated base ('06' thru '09', or '11', '12' in Mounting Base Option) is required when '04' Agency Approval Option is selected.

Two-wire Transducer

9200-AA-BB-CC-DD

A: Transducer Mounting Angle/Minimum Operating Frequency Option	
01	0 ±2.5, 4.5 Hz (270 cpm)
02	45 ±2.5, 4.5 Hz (270 cpm)
03	90 ±2.5, 4.5 Hz (270 cpm)
06	0 ±100, 10 Hz (600 cpm)
09	0 ±180, 15 Hz (900 cpm)
B: Connector/Cable Option	
01	Top Mount (no cable)
02	Side Mount (no cable)
05	Terminal block top mount (no cable)
10 through 50	
Integral hardline cable (see Figure 7 for example). Option number corresponds to cable length in feet. Standard cable lengths are shown below. Other cable lengths between 7 feet and 50 feet may be available through custom products. When ordering for hazardous area	
10	10 feet (3.0 meter)
15	15 feet (4.6 meter)
22	22 feet (6.7 meter)
32	32 feet (9.8 meter)
50	50 feet (15.2 meter)
C: Mounting Base Option	
01	Circular; 1/4-20 UNC stud
02	Circular; 1/4-28 UNF stud
03	Rectangular flange
04	Circular; with three 8-32 threaded studs on a 44 mm (1.75 in) diameter bolt circle
05	No base; 1/2-20 UNF-3A stud
06	Isolated circular 1/4-20 UNC stud
07	Isolated circular 1/4-28 UNF stud
08	Isolated rectangular flange
09	Isolated circular 5/8-18 UNF stud
10	Circular; M10X1 stud
11	Isolated circular M10X1
12	Isolated circular 1/2-20 UNF-2A
D: Agency Approval Option	
00	No Approvals
01	CSA
04	ATEX/IECEx

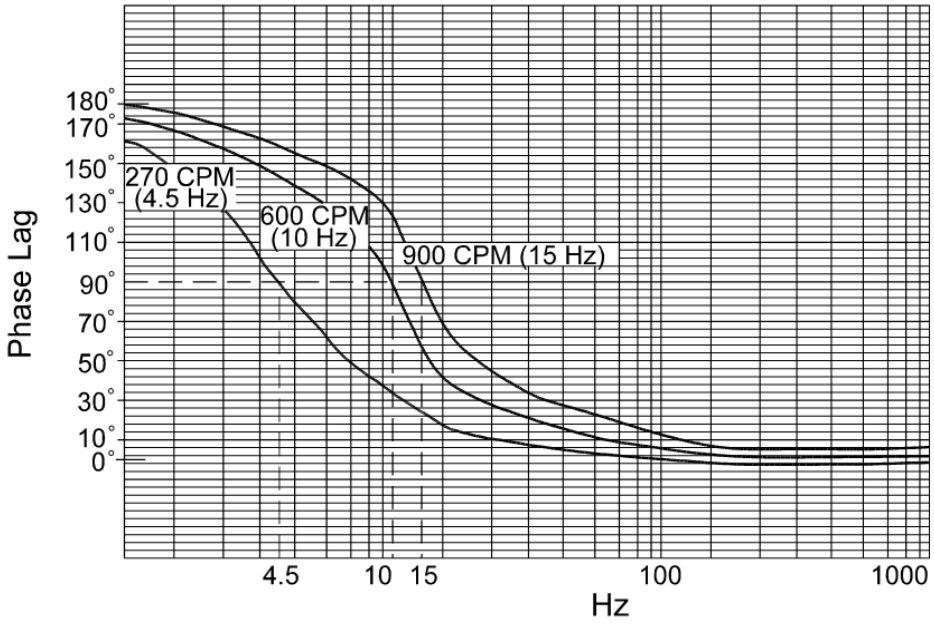

Figure 3: Theoretical Phase Shift between Output and Case Velocity

All dimensions are shown in inches [millimeters].

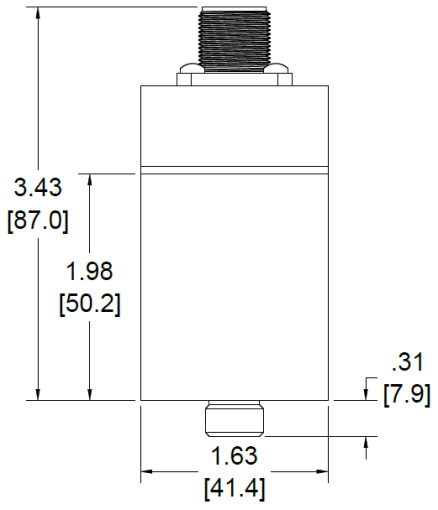

-01

Figure 4: Top Mounted Connector

(9200 Option B-01 or 74712 Option C-02)