FIELD INSTALLATION QUICK GUIDE

Installation Instructions

MV570 1TNA928300R0001

Capacitive touchscreen operator panel

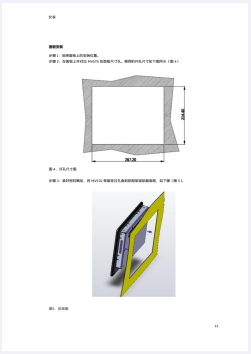

PRODUCT	MV570 1TNA928300R0001
FAMILY	MV570 SmiSView operator interface
FUNCTION	Capacitive touchscreen operator panel
STATUS	Verify exact installed equipment

Prepared by Amikon Limited from ABB documentation. This guide supplements the complete manufacturer manual and site procedure.

01 CONFIRM THE ORDERED CONFIGURATION

Display diagonal	10.4 inch, 4:3 TFT with LED backlight
Display resolution	800 x 600 pixels
Display brightness	300 cd/m2
Processor	Freescale i.MX6 dual-core, 800 MHz
Operating platform	Android; release may vary with production date
Working memory	1 GB DDR3 SDRAM

02 PREPARATION AND CONNECTION

- Disconnect the 24 V supply before handling the panel.
- Prepare the flat panel opening using the ABB cutout drawing.
- Fit the gasket and secure all six retaining clips.
- Connect V+, V- and the documented protective-earth terminals.

03 OFFICIAL INSTALLATION REFERENCE

安装

面板安装

步骤 1：选择面板上的安装位置。
步骤 2：在面板上开对应 MV570 后面板尺寸孔。推荐的开孔尺寸如下图所示（图 4）

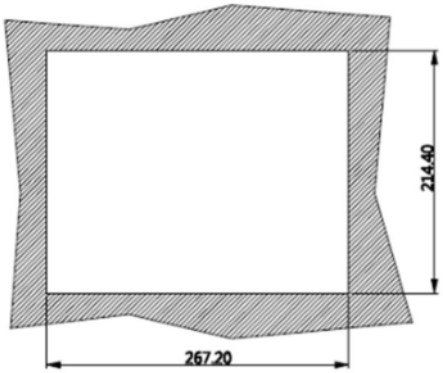

图 4：开孔尺寸图

步骤 3：装好密封圈后，将 MV570 背面穿过孔直到铝框架紧贴着面板，如下图（图 5）。

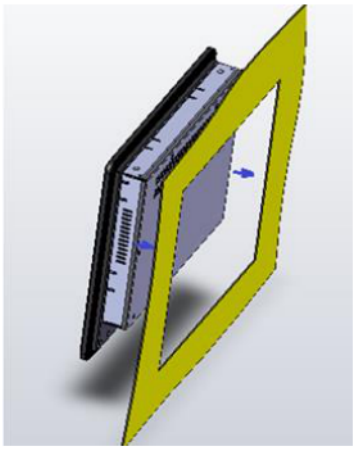

图5：安装图

12

04 COMMISSIONING CHECKS

01	Confirm MV570 and 1TNA928300R0001 on the label.
02	Check the 24 V input polarity and protective earth.
03	Inspect gasket compression and all six retaining clips.
04	Verify touchscreen, Ethernet and USB operation.
05	Load and verify the correct SmiSView project.
06	Test MC510 indications and permitted operator actions.

05 CONTROLLED DOCUMENT

Official source	ABB MV570 User Manual 1TNC928212M2002, Rev B, November 2024.
Product record	MV570 1TNA928300R0001
Manufacturer	ABB
Warranty	12 months from AMIKON
Support	INFO@AMIKON.CN

AMIKON PRODUCT SUPPORT

+86-18020776786 INFO@AMIKON.CN **AMIKONG.COM**