FIELD INSTALLATION QUICK GUIDE

Installation Instructions

31000-28-05-20-033-01-02

External proximity probe housing

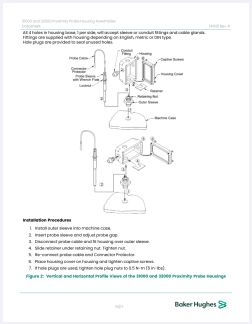

PRODUCT	31000-28-05-20-033-01-02
FAMILY	31000 Proximity Probe Housing
FUNCTION	External proximity probe housing
STATUS	Verify exact installed equipment

Prepared by Amikon Limited from Bently Nevada documentation. This guide supplements the complete manufacturer manual and site procedure.

01 CONFIRM THE ORDERED CONFIGURATION

Included probe	3300 XL 8 mm; approval option selected
Probe lead length	0.5 m
Standoff adapter	2.0 in
Probe penetration	3.3 in
Conduit fitting selection	One 3/4-14 NPT fitting and two plugs
Mounting thread	3/4-14 NPT

02 PREPARATION AND CONNECTION

- Install the outer sleeve into the machine case.
- Insert the probe sleeve and adjust the probe gap.
- Disconnect the probe cable and fit the housing over the outer sleeve.
- Slide the retainer under the retaining nut, then tighten the nut.

03 OFFICIAL INSTALLATION REFERENCE

All 4 holes in housing base, 1 per side, will accept sleeve or conduit fittings and cable glands.
Fittings are supplied with housing depending on English, metric or DIN type.
Hole plugs are provided to seal unused holes.

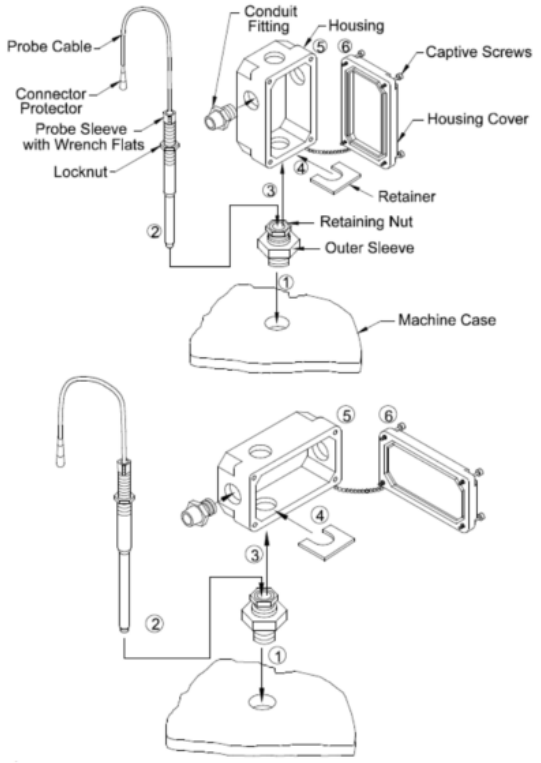

Installation Procedures

1. Install outer sleeve into machine case.
2. Insert probe sleeve and adjust probe gap.
3. Disconnect probe cable and fit housing over outer sleeve.
4. Slide retainer under retaining nut. Tighten nut.
5. Re-connect probe cable and Connector Protector.
6. Place housing cover on housing and tighten captive screws.
7. If hole plugs are used, tighten hole plug nuts to 0.5 N-m (5 in-lbs).

Figure 2: Vertical and Horizontal Profile Views of the 31000 and 32000 Proximity Probe Housings

Official manufacturer page reproduced at its original aspect ratio.

04 COMMISSIONING CHECKS

01	Confirm the 3/4-14 NPT outer sleeve is secure.
02	Verify the selected standoff and penetration geometry.
03	Check the adjusted probe gap with the matched sensing chain.
04	Reconnect the probe cable and connector protection.
05	Place the cover on the housing and tighten its captive screws.
06	Tighten any hole-plug nuts to 0.5 N m (5 in lb).

05 CONTROLLED DOCUMENT

Official source	Bently Nevada 141610 Rev. R, page 16.
Product record	31000-28-05-20-033-01-02
Manufacturer	Bently Nevada
Warranty	12 months from AMIKON
Support	INFO@AMIKON.CN

AMIKON PRODUCT SUPPORT

+86-18020776786 INFO@AMIKON.CN **AMIKONG.COM**