MANUFACTURER DOCUMENT PACKAGE

Manufacturer's Manual

Reference package for procurement and maintenance review

ABB

1SDA051266R1

THERMOMAGNETIC MOLDED-CASE CIRCUIT BREAKER

Used with the applicable SACE Tmax T3S 250 configuration.

REFERENCE PACKAGE

OFFICIAL DOCUMENT

Selected official manufacturer pages follow this cover.

Source: ABB SACE Tmax T Generation Technical Catalogue 1SDC210015D0207, January 2013; pp. 1/11, 2/2-2/4, 2/7, 6/8 and 7/9.


1SDC210A40F0001


1SDC210A41F0001

Versions and types

All the Tmax circuit breakers are available in fixed versions, T2, T3, T4 and T5 in the plug-in version and T4, T5, T6(*) and T7 also in the withdrawable one.
All the circuit breakers can be manually operated, by the operating lever or the rotary handle (direct or transmitted), and electrically operated. For this issue different solutions are available:

– The solenoid operator for T1, T2 and T3
– The stored energy motor operator for T4, T5 and T6
– T7 with the stored energy operating mechanism, gear motor for the automatic charging of the closing springs and shunt opening and closing releases.

Installation

Tmax circuit-breakers can be installed in the switchboards, mounted in any horizontal, vertical or lying down position on the back plate or on rails, without undergoing any derating of their rated characteristics. Tmax circuit-breakers can be installed easily in all types of switchboards, above all thanks to the possibility of being supplied either by top or bottom terminals, without jeopardizing the apparatus functionality(**).
Apart from fixing on the base plate, T1, T2 and T3 can also be installed on DIN 50022 rails, thanks to the special fixing brackets.
Furthermore, the depth of 70 mm takes Tmax T3 to the same standard as the two smaller sizes, making assembly of circuit-breakers up to 250 A in standard switchboards even simpler. In fact, it is possible to prepare standardised support structures, facilitating the design stage and construction of the switchboard metalwork.

(*) Not available on the 1000 A version.
(**) For uses at a voltage of 1000 V, T4V250 and T5V400 in the fixed version, and T4L250 and T5L400 in the plug-in version must be supplied from above.

Circuit-breakers for power distribution
Electrical characteristics

				Tmax T1 1P	Tmax T1			Tmax T2			
Rated uninterrupted current			[A]	160	160			160			
Poles			[No.]	1	3/4			3/4			
Rated service voltage, **Ue**		(AC) 50-60 Hz	[V]	240	690			690			
		(DC)	[V]	125	500			500			
Rated impulse withstand voltage, **Uimp**			[kV]	8	8			8			
Rated insulation voltage, **Ui**			[V]	500	800			800			
Test voltage at industrial frequency for 1 min.			[V]	3000	3000			3000			
Rated ultimate short-circuit breaking capacity, **Icu**				**B**	**B**	**C**	**N**	**N**	**S**	**H**	**L**
	(AC) 50-60 Hz 220/230 V		[kA]	25*	25	40	50	65	85	100	120
	(AC) 50-60 Hz 380/400/415 V		[kA]	–	16	25	36	36	50	70	85
	(AC) 50-60 Hz 440 V		[kA]	–	10	15	22	30	45	55	75
	(AC) 50-60 Hz 500 V		[kA]	–	8	10	15	25	30	36	50
	(AC) 50-60 Hz 690 V		[kA]	–	3	4	6	6	7	8	10
	(DC) 250 V - 2 poles in series		[kA]	25 (at 125 V)	16	25	36	36	50	70	85
	(DC) 250 V - 3 poles in series		[kA]	–	20	30	40	40	55	85	100
	(DC) 500 V - 2 poles in series		[kA]	–	–	–	–	–	–	–	–
	(DC) 500 V - 3 poles in series		[kA]	–	16	25	36	36	50	70	85
	(DC) 750 V - 3 poles in series		[kA]	–	–	–	–	–	–	–	–
Rated service short-circuit breaking capacity, **Ics**											
	(AC) 50-60 Hz 220/230 V		[%Icu]	75%	100%	75%	75%	100%	100%	100%	100%
	(AC) 50-60 Hz 380/400/415 V		[%Icu]	–	100%	100%	75%	100%	100%	100%	75% (70 kA)
	(AC) 50-60 Hz 440 V		[%Icu]	–	100%	75%	50%	100%	100%	100%	75%
	(AC) 50-60 Hz 500 V		[%Icu]	–	100%	75%	50%	100%	100%	100%	75%
	(AC) 50-60 Hz 690 V		[%Icu]	–	100%	75%	50%	100%	100%	100%	75%
Rated short-circuit making capacity, **Icm**											
	(AC) 50-60 Hz 220/230 V		[kA]	52.5	52.5	84	105	143	187	220	264
	(AC) 50-60 Hz 380/400/415 V		[kA]	–	32	52.5	75.6	75.6	105	154	187
	(AC) 50-60 Hz 440 V		[kA]	–	17	30	46.2	63	94.5	121	165
	(AC) 50-60 Hz 500 V		[kA]	–	13.6	17	30	52.5	63	75.6	105
	(AC) 50-60 Hz 690 V		[kA]	–	4.3	5.9	9.2	9.2	11.9	13.6	17
Opening time (415 V)			[ms]	7	7	6	5	3	3	3	3
Utilisation category (IEC 60947-2)				A	A			A			
Reference Standard				IEC 60947-2	IEC 60947-2			IEC 60947-2			
Isolation behaviour				■	■			■			
Trip units:	thermomagnetic										
	T fixed, M fixed		TMF	■	–			–			
	T adjustable, M fixed		TMD	–	■			■			
	T adjustable, M adjustable (5...10 x In)		TMA	–	–			–			
	T adjustable, M fixed (3 x In)		TMG	–	–			■ (8)			
	T adjustable, M adjustable (2.5...5 x In)		TMG	–	–			–			
	magnetic only		MA	–	–			■ (MF up to In 12.5 A)			
	electronic		PR221DS	–	–			■			
			PR221GP/PR221MP	–	–			■			
			PR222DS	–	–			–			
			PR223DS	–	–			–			
			PR231/P	–	–			–			
			PR232/P	–	–			–			
			PR331/P	–	–			–			
			PR332/P	–	–			–			
Interchangeability				–	–			–			
Versions				F	F			F-P			
Terminals	fixed			FC Cu	FC Cu-EF-FC CuAl-HR			F-FC Cu-FC CuAl-EF-ES-R			
	plug-in			–	–			F-FC Cu-FC CuAl-EF-ES-R			
	withdrawable			–	–			–			
Fixing on DIN rail				–	DIN EN 50022			DIN EN 50022			
Mechanical life			[No. operations]	25000	25000			25000			
			[No. Hourly operations]	240	240			240			
Electrical life @ 415 V AC			[No. operations]	8000	8000			8000			
			[No. Hourly operations]	120	120			120			
Basic dimensions - fixed version		3 poles	W [mm]	25.4 (1 pole)	76			90			
		4 poles	W [mm]	–	102			120			
			D [mm]	70	70			70			
			H [mm]	130	130			130			
Weight	fixed	3/4 poles	[kg]	0.4 (1 pole)	0.9/1.2			1.1/1.5			
	plug-in	3/4 poles	[kg]	–	–			1.5/1.9			
	withdrawable	3/4 poles	[kg]	–	–			–			

TERMINAL CAPTION
F = Front
EF = Front extended
ES = Front extended spread
FC Cu = Front for copper cables
FC CuAl = Front for copper-aluminium cables
R = Rear orientated
HR = Rear flat horizontal
VR = Rear flat vertical
HR/VR = Rear flat orientated
MC = Multicable
F = fixed circuit-breakers
P = plug-in circuit-breakers
W = withdrawable circuit-breakers
(*) The breaking capacity for settings In = 16 A and In = 20 A is 16 kA

Tmax T3		Tmax T4					Tmax T5					Tmax T6[9]				Tmax T7[10]			
250		250/320					400/630					630/800/1000				800/1000/1250/1600			
3/4		3/4					3/4					3/4				3/4			
690		690					690					690				690			
500		750					750					750				–			
8		8					8					8				8			
800		1000					1000					1000				1000			
3000		3500					3500					3500				3500			
N	**S**	**N**	**S**	**H**	**L**	**V**	**N**	**S**	**H**	**L**	**V**	**N**	**S**	**H**	**L**	**S**	**H**	**L**	**V[6]**
50	85	70	85	100	200	200	70	85	100	200	200	70	85	100	200	85	100	200	200
36	50	36	50	70	120	200	36	50	70	120	200	36	50	70	100	50	70	120	150
25	40	30	40	65	100	180	30	40	65	100	180	30	45	50	80	50	65	100	130
20	30	25	30	50	85	150	25	30	50	85	150	25	35	50	65	40	50	85	100
5	8	20	25	40	70	80	20	25	40	70	80	20	22	25	30	30	42	50	60
36	50	36	50	70	100	150	36	50	70	100	150	36	50	70	100	–	–	–	–
40	55	–	–	–	–	–	–	–	–	–	–	–	–	–	–	–	–	–	–
–	–	25	36	50	70	100	25	36	50	70	100	20	35	50	65	–	–	–	–
36	50	–	–	–	–	–	–	–	–	–	–	–	–	–	–	–	–	–	–
–	–	16	25	36	50	70	16	25	36	50	70	16	20	36	50	–	–	–	–
75%	50%	100%	100%	100%	100%	100%	100%	100%	100%	100%	100%	100%	100%	100%	75%	100%	100%	100%	100%
75%	50% (27 kA)	100%	100%	100%	100%	100%	100%	100%	100%	100%	100%	100%	100%	100%	75%	100%	100%	100%	100%
75%	50%	100%	100%	100%	100%	100%	100%	100%	100%	100%	100%	100%	100%	100%	75%	100%	100%	100%	100%
75%	50%	100%	100%	100%	100%	100%	100%	100%	100%	100%[1]	100%[2]	100%	100%	100%	75%	100%	100%	75%	100%
75%	50%	100%	100%	100%	100%	100%	100%	100%	100%[1]	100%[2]	100%[2]	75%	75%	75%	75%	100%	75%	75%	75%
105	187	154	187	220	440	660	154	187	220	440	660	154	187	220	440	187	220	440	440
75.6	105	75.6	105	154	264	440	75.6	105	154	264	440	75.6	105	154	220	105	154	264	330
52.5	84	63	84	143	220	396	63	84	143	220	396	63	94.5	105	176	105	143	220	286
40	63	52.5	63	105	187	330	52.5	63	105	187	330	52.5	73.5	105	143	84	105	187	220
7.7	13.6	40	52.5	84	154	176	40	52.5	84	154	176	40	46	52.5	63	63	88.2	105	132
7	6	5	5	5	5	5	6	6	6	6	6	10	9	8	7	15	10	8	8
A		A					B (400 A)[3] - A (630 A)					B (630A - 800A)[5] - A (1000A)				B[7]			
IEC 60947-2		IEC 60947-2					IEC 60947-2					IEC 60947-2				IEC 60947-2			
■		■					■					■				■			
–		–					–					–				–			
■		■ (up to 50 A)					–					–				–			
–		■ (up to 250 A)					■ (up to 500 A)					■ (up to 800 A)[4]				–			
■		–					–					–				–			
–		–					■ (up to 500 A)					–				–			
■		■					–					–				–			
–		■					■					■				–			
–		–					–					–				–			
–		■					■					■				–			
–		■					■					■				–			
–		–					–					–				■			
–		–					–					–				■			
–		–					–					–				■			
–		–					–					–				■			
–		■					■					■				■			
F-P		F-P-W					F-P-W					F-W[4]				F-W			
F-FC Cu-FC Cu Al-EF-ES-R		F-FC Cu-FC CuAl-EF-ES-R-MC					F-FC CuAl-EF-ES-R-RC					F-FC CuAl-EF-ES-R-RC				F-EF-ES-FC CuAl-HR/VR			
F-FC Cu-FC Cu Al-EF-ES-R		EF-ES-HR-VR-FC Cu-FC CuAl					EF-ES-HR-VR-FC Cu-FC CuAl					–				–			
–		EF-ES-HR-VR-FC Cu-FC CuAl					EF-ES-HR-VR-FC Cu-FC CuAl					EF-HR-VR				EF-HR/VR-RS-ES			
DIN EN 50022		–					–					–				–			
25000		20000					20000					20000				10000			
240		240					120					120				60			
8000		8000 (250 A) - 6000 (320 A)					7000 (400 A) - 5000 (630 A)					7000 (630A) - 5000 (800A) - 4000 (1000A)				2000 (S, H, L versions) / 3000 (V version)			
120		120					60					60				60			
105		105					140					210				210			
140		140					186					280				280			
70		103.5					103.5					103.5				154 (manual) /178 (motorizable)			
150		205					205					268				268			
1.5/2		2.35/3.05					3.25/4.15					9.5/12				9.7/12.5 (manual) - 11/14 (motorizable)			
2.7/3.7		3.6/4.65					5.15/6.65					–				–			
–		3.85/4.9					5.4/6.9					12.1/15.1				29.7/39.6 (manual) - 32/42.6 (motorizable)			

[1] 75% for T5 630
[2] 50% for T5 630
[3] Icw = 5 kA
[4] W version is not available on T6 1000 A
[5] Icw = 7.6 kA (630 A) - 10 kA (800 A)
[6] Only for T7 800/1000/1250 A
[7] Icw = 20 kA (S,H,L versions) - 15 kA (V version)
[8] For availability, please ask ABB SACE
[9] For T6V version please ask ABB SACE
[10] For T7V version please ask ABB SACE

Notes: In the plug-in version of T2, T3 and T5 630 and in the withdrawable version of T5 630 the maximum rated current available is derated by 10% at 40 °C

Circuit-breakers for power distribution
General characteristics

The series of Tmax moulded-case circuit-breakers - complying with the IEC 60947-2 Standard - is divided into seven basic sizes, with an application range from 1 A to 1600 A and breaking capacities from 16 kA to 200 kA (at 380/415 V AC).
For protection of alternating current networks, the following are available:

- T1B 1p circuit-breaker, equipped with TMF thermomagnetic trip units with fixed thermal and magnetic threshold (I_3 = 10 x In);
- T1, T2, T3 and T4 (up to 50 A) circuit-breakers equipped with TMD thermomagnetic trip units with adjustable thermal threshold (I_1 = 0.7…1 x In) and fixed magnetic threshold (I_3 = 10 x In);
- T2, T3 and T5 circuit-breakers, fitted with TMG trip units for long cables and generator protection with adjustable thermal threshold (I_1 = 0.7…1 x In) and fixed magnetic threshold (I_3 = 3 x In) for T2 and T3 and adjustable magnetic threshold (I_3 = 2.5…5 x In) for T5;
- T4, T5 and T6 circuit-breakers with TMA thermomagnetic trip units with adjustable thermal threshold (I_1 = 0.7…1 x In) and adjustable magnetic threshold (I_3 = 5…10 x In);
- T2 with PR221DS electronic trip unit;
- T4, T5 and T6 with PR221DS, PR222DS/P, PR222DS/PD and PR223DS electronic trip units;
- the T7 circuit-breaker, which completes the Tmax family up to 1600 A, fitted with PR231/P, PR232/P, PR331/P and PR332/P electronic trip units. The T7 circuit-breaker is available in the two versions: with manual operating mechanism or motorizable with stored energy operating mechanism(*).

The field of application in alternating current of the Tmax series varies from 1 A to 1600 A with voltages up to 690 V. The Tmax T1, T2, T3, T4, T5 and T6 circuit-breakers equipped with TMF, TMD and TMA thermomagnetic trip units can also be used in direct current plants, with a range of application from 1 A to 800 A and a minimum operating voltage of 24 V DC, according to the appropriate connection diagrams.
The three-pole T2, T3 and T4 circuit-breakers can also be fitted with MF and MA adjustable magnetic only trip units, both for applications in alternating current and in direct current, in particular for motor protection (see page 2/40 and following).
For all the circuit-breakers in the series, fitted with thermomagnetic and electronic trip units, the single-phase trip current is defined (see page 4/57).

(*) For motorisation, the T7 circuit-breaker with stored energy operating mechanism must be ordered, complete with geared motor for automatic spring charging, opening coil and closing coil.

Interchangeability

The Tmax T4, T5 and T6 circuit-breakers can be equipped either with TMF, TMD, TMG or TMA thermomagnetic trip units, MA magnetic only trip units or PR221DS, PR222DS/P, PR222DS/PD, PR222MP and PR223DS electronic trip units.
Similarly, Tmax T7 can also mount the latest generation PR231/P, PR232/P, PR331/P(1) and PR332/P(1) electronic trip units.
Thanks to their simplicity of assembly, the end customer can change the type of trip unit extremely rapidly, according to their own requirements and needs: in this case, correct assembly is the customer's responsibility. Above all, this means into increased flexibility of use of the circuit-breakers with considerable savings in terms of costs thanks to better rationalisation of stock management.

Trip units

Circuit-breakers	TMD			TMA											TMG			MA							
In [A]	20	32	50	80	100	125	160	200	250	320	400	500	630	800	320	400	500	10	25	52	80	100	125	160	200
T4 250	■	■	■	■	■	■	■	■	■									■	■	■	■	■	■	■	■
T4 320	▲	▲	▲	▲	▲	▲	▲	▲	▲									▲	▲	▲	▲	▲	▲	▲	▲
T5 400										■	■				▲	▲									
T5 630										▲	▲	■			▲	▲	▲								
T6 630													■												
T6 800														■											
T6 1000																									
T7 800																									
T7 1000																									
T7 1250																									
T7 1600																									

■ = Complete circuit-breaker already coded
▲ = Circuit-breaker to be assembled

(1) If ordered loose PR331/P and PR332/P must be completed with the "trip unit adapters" (see page 3/48)

TMD - T1 and T3

L	In [A]	16[1]	20[1]	25[2]	32	40	50	63	80	100	125	125	160	200	250
	Neutral [A] - 100%	16	20	25	32	40	50	63	80	100	125	–	160	200	250
I_1 = 0.7...1 x In	Neutral [A] - 50%	–	–	–	–	–	–	–	–	–	–	80	100	125	160
T1 160		■	■	■	■	■	■	■	■	■	■	–	■	–	–
T3 250								■	■	■	■	■	■	■	■
I	I_3 [A]	630[3]	630[3]	630[3]	630[3]	630[3]	630[3]	630	800	1000	1250	1250	1600	2000	2500
	Neutral [A] - 100%	630	630	630	630	630	630	630	800	1000	1250	1250	1600	2000	2500
I_3 = 10 x In	Neutral [A] - 50%	–	–	–	–	–	–	–	–	–	–	800	1000	1250	1600

[1] Only T1B [2] Only T1B and T1C [3] T1N ⇒ I_3 [A] = 500; T1B-C available also the version with ⇒ I_3 [A] = 500

TMD - T2

L	In [A]	1.6	2	2.5	3.2	4	5	6.3	8	10	12.5	16	20	25	32	40	50	63	80	100	125	160
	Neutral [A] - 100%	1.6	2	2.5	3.2	4	5	6.3	8	10	12.5	16	20	25	32	40	50	63	80	100	125	160
I_1 = 0.7...1 x In	Neutral [A] - 50%	–	–	–	–	–	–	–	–	–	–	–	–	–	–	–	–	–	–	–	80	100
I	I_3 [A]	16	20	25	32	40	50	63	80	100	125	500	500	500	500	500	500	630	800	1000	1250	1600
	Neutral [A] - 100%	16	20	25	32	40	50	63	80	100	125	500	500	500	500	500	500	630	800	1000	1250	1600
I_3 = 10 x In	Neutral [A] - 50%	–	–	–	–	–	–	–	–	–	–	–	–	–	–	–	–	–	–	–	800	1000

TMG - T2

L	In [A]	25	40	63	80	100	125	160
	Neutral [A] - 100%	25	40	63	80	100	125	160
I_1 = 0.7...1 x In								
I	I_3 [A]	160	200	200	240	300	375	480
	Neutral [A] - 100%	160	200	200	240	300	375	480
I_3 = 3 x In								

TMG - T3

L	In [A]	63	80	100	125	160	200	250
	Neutral [A] - 100%	63	80	100	125	160	200	250
I_1 = 0.7...1 x In								
I	I_3 [A]	400	400	400	400	480	600	750
	Neutral [A] - 100%	400	400	400	400	480	600	750
I_3 = 3 x In								

Notes:
- In identifies the setting current for protection of the phases (L1, L2 and L3) and of the neutral.
- The TMD and TMA thermomagnetic trip units have the thermal element with adjustable threshold I_1 = 0.7…1 x In. The value of the thermal element adjustment which is obtained by acting on the special selector, is intended at 40 °C. The magnetic element has fixed trip threshold with ± 20% tolerance according to what is indicated by the IEC 60947-2 (pos. 8.3.3.1.2) Standard. The trip thresholds of the magnetic protection I_3 are a function of the setting used both by the phase and neutral protection.

Overall dimensions
Tmax T3

Fixed circuit-breaker

Fixing on sheet

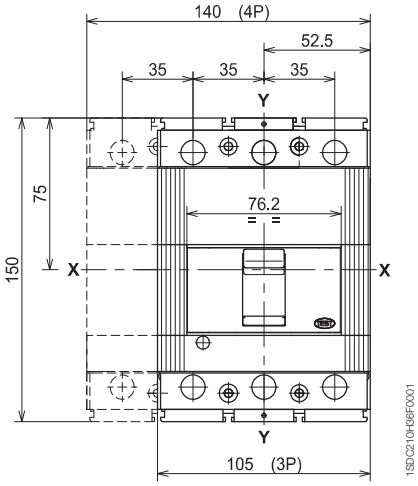

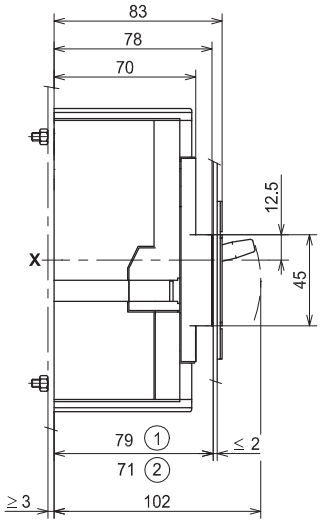

Fixing on DIN EN 50022 rail

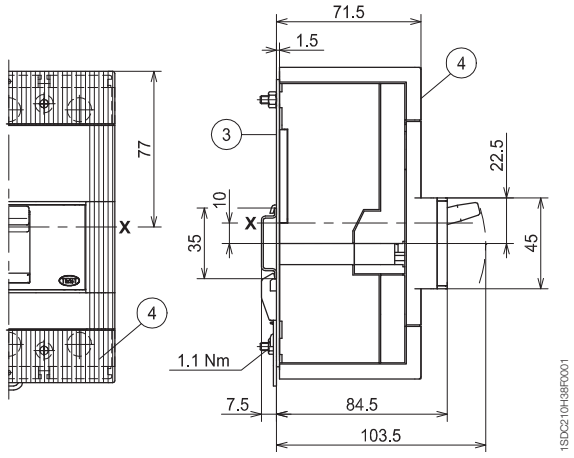

Caption

(1) Depth of the switchboard in the case of circuit-breaker with face not extending from the compartment door, with or without flange

(2) Depth of the switchboard in the case of circuit-breaker with face extending from the compartment door

(3) Bracket for fixing on rail

(4) Low terminal covers with degree of protection IP40

Flange for compartment door

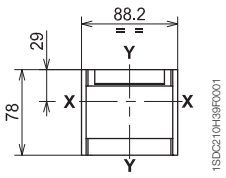

Drilling templates of the compartment door

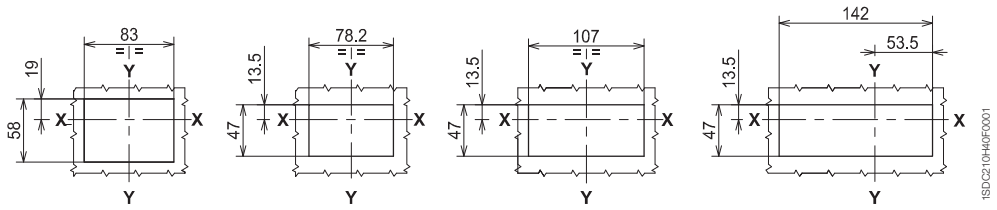

With flange and circuit-breaker face flush with door (3-4 POLES)

Without flange and circuit-breaker face flush with door (3-4 POLES)

Without flange and circuit-breaker face extending (3 POLES)

Without flange and circuit-breaker face extending (4 POLES)

Drilling templates for support sheet

For front terminals

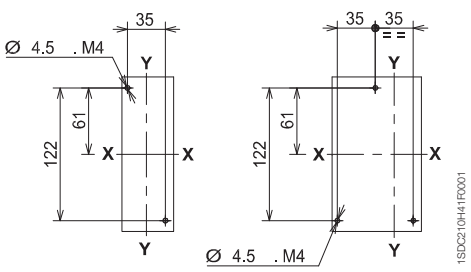

3 POLES 4 POLES

For rear terminals

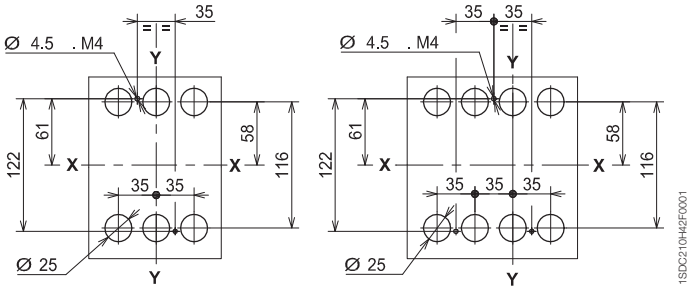

3 POLES 4 POLES

T3 250 – Fixed (F) – 3 Poles - Front terminals (F)

Thermomagnetic trip unit - TMD	In	I_3	Icu (415 V)	1SDA.....R1				
				N (36 kA)	**S** (50 kA)			
	63	630		051241	051263			
	80	800		051242	051264			
	100	1000		051243	051265			
	125	1250		051244	051266			
	160	1600		051245	051267			
	200	2000		051246	051268			
	250	2500		051247	051269			

Thermomagnetic trip unit for generator protection - TMG	In	I_3	Icu (415 V)	1SDA.....R1				
				N (36 kA)	**S** (50 kA)			
	63	400		055105	055119			
	80	400		055106	055120			
	100	400		055107	055121			
	125	400		055108	055122			
	160	480		055109	055123			
	200	600		055110	055124			
	250	750		055111	055125			

T3 250 – Fixed (F) – 4 Poles - Front terminals (F)

Thermomagnetic trip unit - TMD	In	I_3	Icu (415 V)	1SDA.....R1				
				N (36 kA)	**S** (50 kA)			
	63	630		051252	051274			
	80	800		051253	051275			
	100	1000		051254	051276			
N=50%	125	1250		051255	051277			
N=50%	160	1600		051256	051278			
N=50%	200	2000		051257	051279			
N=50%	250	2500		051258	051280			
N=100%	125	1250		051303	051307			
N=100%	160	1600		051304	051308			
N=100%	200	2000		051305	051309			
N=100%	250	2500		051306	051310			

Thermomagnetic trip unit for generator protection - TMG	In	I_3	Icu (415 V)	1SDA.....R1				
				N (36 kA)	**S** (50 kA)			
	63	400		055112	055126			
	80	400		055113	055127			
	100	400		055114	055128			
	125	400		055115	055129			
	160	480		055116	055130			
	200	600		055117	055131			
	250	750		055118	055132			