MANUFACTURER DOCUMENT PACKAGE

Manufacturer's Manual

Reference package for procurement and maintenance review

BENTLY NEVADA

AS3100S2-Z2

SIDE-EXIT IEPE ACCELEROMETER

Used with the applicable IEPE accelerometers configuration.

REFERENCE PACKAGE

OFFICIAL DOCUMENT

Selected official manufacturer pages follow this cover.

Source: Bently Nevada IEPE Accelerometers Datasheet 124M2609 Rev. H; AS3100S2-Z2 specifications and Figure 2.

IEPE Accelerometer Series

Datasheet

Cordant™

124M2609 Rev. H





Description

This series of Integrated Electronics Piezo-Electric (IEPE) accelerometers are optimized for obtaining high quality vibration signals in harsh industrial environments. Their piezo sensing elements provide exceptional dynamic range, frequency range and linearity, while their integrated amplifiers boost the signal, making them relatively immune to electrical noise.

They require an industry standard constant-current power supply, and provide an output voltage proportional to the acceleration signal. So they can interface to a wide variety of condition monitoring systems.

Within the series are options for 100 or 500 mV/g sensitivity, top-exit or side-exit connector, and several hazardous-area certification levels.

Features

- Rugged stainless design, corrosion resistant
- Hermetic seal, case isolated
- ESD protection
- Reverse wiring protection
- EMI / RFI shielded
- Hazardous area certifications

Benefits

- Able to fit in small spaces
- Light weight for walk around programs
- Cross wiring does not harm sensor
- Prevents ground loops in permanent mount applications
- Can be hosed down or submersed with proper connector
- Can be used in applicable certified hazardous areas

Baker Hughes

AS3100S2-Z2 Specifications

Dynamic

Sensitivity, ± 5% @25°C	100 mV/g
Acceleration range	80 g peak
Amplitude nonlinearity	1%
Frequency response	±10%: 1.0-5,000 Hz ± 3 dB: 0.5-10,000 Hz
Resonant frequency	22 kHz
Transverse sensitivity, max	±5% of axial
Temperature response	-55°C: -20% +120°C: +10%

Electrical

Voltage source	18-30 Vdc
Current regulating diode	2-10 mA
Broadband electrical noise @ 2.5 Hz to 25 kHz	700 µg
Spectral electrical noise @ 10 Hz	10 µg/√Hz
Spectral electrical noise @ 100 Hz	5 µg/√Hz
Spectral electrical noise @ 1000 Hz	5 µg/√Hz
Output Impedance, max	100 Ω
Bias output voltage	12 Vdc
Grounding	case isolated, internally shielded

Environmental

Temperature range	-55°C to 120°C
Vibration limit	500 g peak
Shock limit	5,000 g peak
Electromagnetic sensitivity, equiv g, max	70 µg/gauss
Sealing	Hermetic
Base strain sensitivity, max	0.002 g/µstrain

Physical

Sensing element design	PZT ceramic / shear
Weight	145 grams
Case material	316L Stainless Steel
Mounting	1/4-28 UNF tapped hole
Connector	Side exit, 2-pin, MIL-C-5015 style
Recommended cabling	Shielded, twisted pair, no longer than 100 feet

Connections

Connector Pin	Function
Shell	ground
A	power/signal
B	common

Frequency response and spectral noise values are typical.

Baker Hughes

Compliance and Certifications

This device complies with part 15 of the FCC Rules. Operation is subject to the following two conditions:

1. This device may not cause harmful interference.
2. This device must accept any interference received, including interference that may cause undesired operation.

European Community Directives

EMC Directive 2014/30/EU
LV Directive 2014/35/EU
Reach Directive 1907/2006/EC
ROHS Directive 2011/65/EU

Hazardous Area Approvals

CSA/NRTL/C

Class I, Div 2, Groups A, B, C, D
Class I, Zone 2: AEx/Ex nA IIC T4
Install per drawing 117M2767

Graphs and Figures

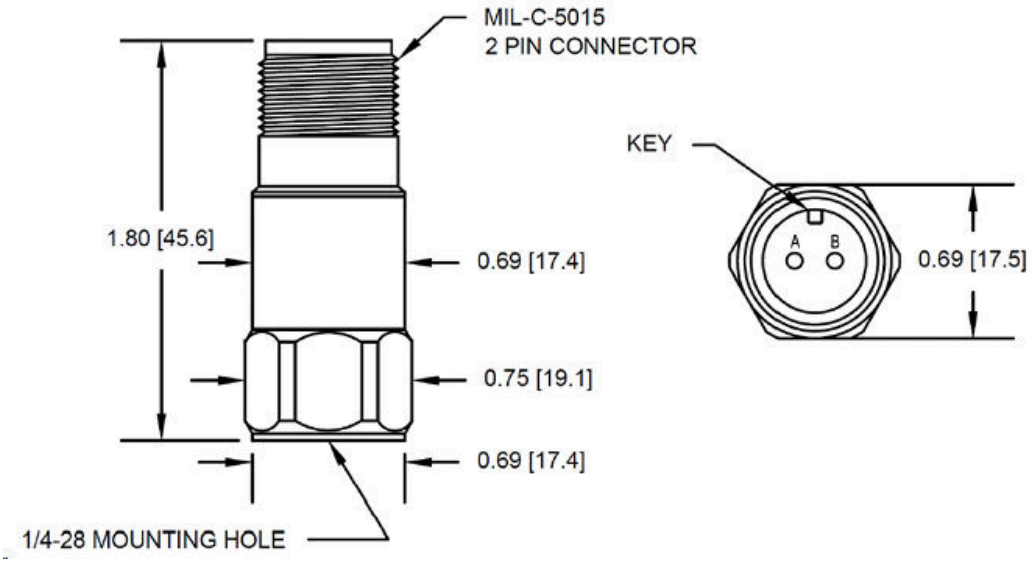

Figure 1: AM3100T2-Z2 & AM3100T2-Z0 dimensions

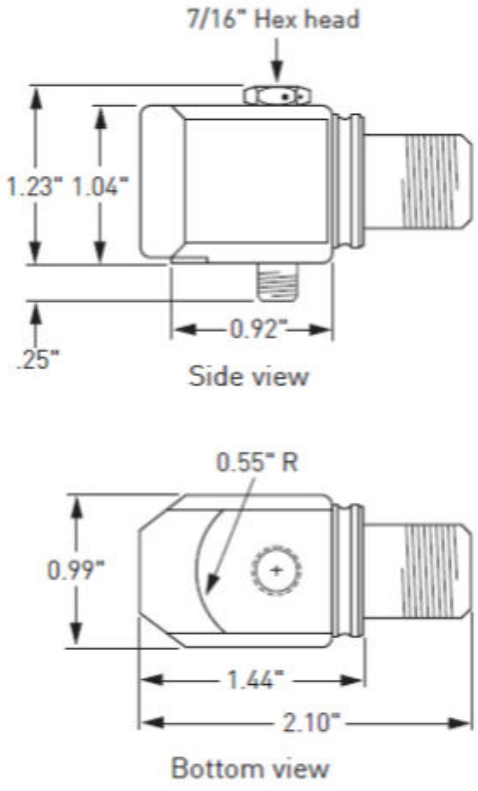

Figure 2: AS3100S2-Z2 & AS3100S2-Z0 Dimensions

Copyright 2025 Baker Hughes Company. All rights reserved.

Bently Nevada, a Baker Hughes Company

1631 Bently Parkway South, Minden, Nevada USA 89423

https://bntechsupport.com