MANUFACTURER DOCUMENT PACKAGE

Manufacturer's Manual

Reference package for procurement and maintenance review

GENERAL ELECTRIC

IC694MDL931

8-POINT ISOLATED RELAY OUTPUT MODULE

Used with the applicable GE PACSystems RX3i configuration.

REFERENCE PACKAGE

OFFICIAL DOCUMENT

Selected official manufacturer pages follow this cover.

Source: GE Fanuc PACSystems RX3i System Manual GFK-2314, June 2004, pages 7-35 to 7-38.

Output Module, Isolated Relay, N.C. and Form C, 8A , 8 Pt: IC694MDL931

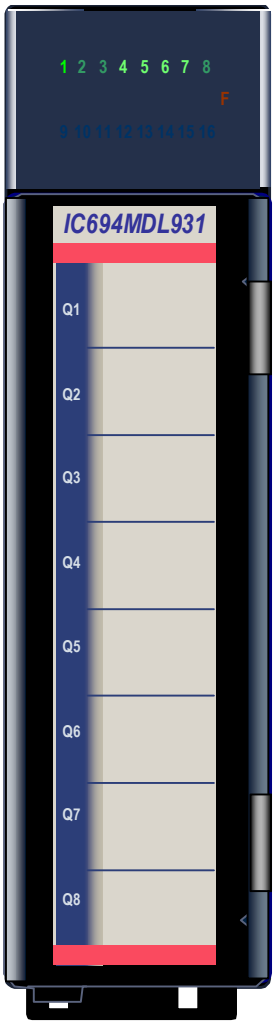

The ***8 Amp* Isolated Relay Output** module, IC694MDL931, provides 4 normally-closed and 4 Form C relay circuits for controlling output loads provided by the user. The output switching capacity of each circuit is 8 Amps. Each output relay is isolated from the other relays, and each relay has a separate common power output terminal. The relay outputs can control a wide range of load devices, such as: motor starters, solenoids, and indicators. The user must supply the AC or DC power to operate the field devices.

Individual numbered LEDs show the ON/OFF status of each output point. There are no fuses on this module. The red bands on the label show that MDL931 is a high-voltage module.

This module can be installed in any I/O slot in an RX3i system.

Specifications: MDL931

Rated Voltage	24 volts DC, 120/240 volts AC, 50/60 Hz (nominal - see the following table for exceptions)
Output Voltage Range	5 to 30 volts DC
	5 to 250 volts AC, 50/60 Hz
Outputs per Module	8 isolated outputs
Isolation	
Field to Backplane and to Frame Ground	250 VAC continuous; 1500 VAC for 1 minute
Point to Point	250 VAC continuous; 1500 VAC for 1 minute
Maximum Load	8 Amps resistive maximum per output
	20 Amps maximum per module for UL installations
	Maximum load depends on ambient temperature as shown.
Minimum Load	10mA
Inrush Current	8 Amps maximum for one cycle
On Response Time	15ms maximum
Off Response Time	15ms maximum
Output Leakage Current	1mA maximum at 250 volts AC, (25°C (77°F))
Power Consumption	6mA (all outputs on) from 5 volt bus on backplane
	110mA (all outputs on) from relay 24V bus on backplane

Refer to Appendix A for product standards and general specifications.

Load Current vs. Temperature

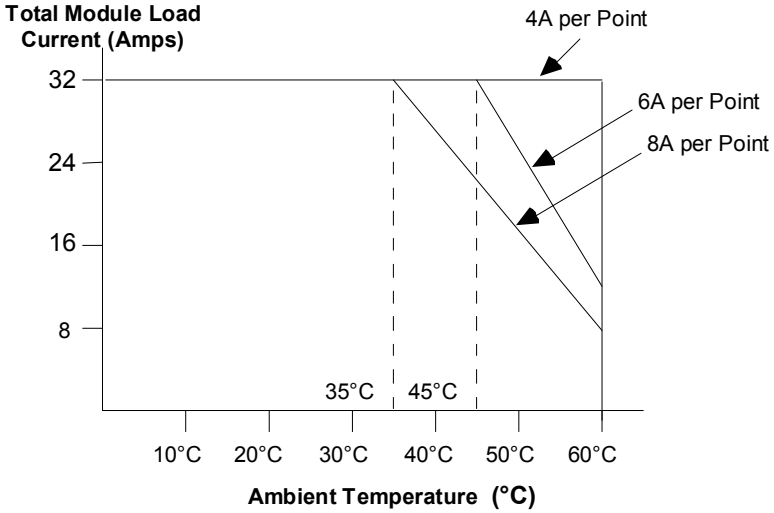

Field Wiring: MDL931

Terminal	Connection
1	Output 1
2	Output 1 return
3	Output 2
4	Output 2 return
5	Output 3
6	Output 3 return
7	Output 4
8	Output 4 return
9	Output 5 (if normally-closed relay)
10	Output 5 return
11	Output 5 (if normally-open relay)
12	Output 6 (if normally-closed relay)
13	Output 6 return
14	Output 6 (if normally-open relay)
15	Output 7 (if normally-closed relay)
16	Output 7 return
17	Output 7 (if normally-open relay)
18	Output 8 (if normally-closed relay)
19	Output 8 return
20	Output 8 (if normally-open relay)

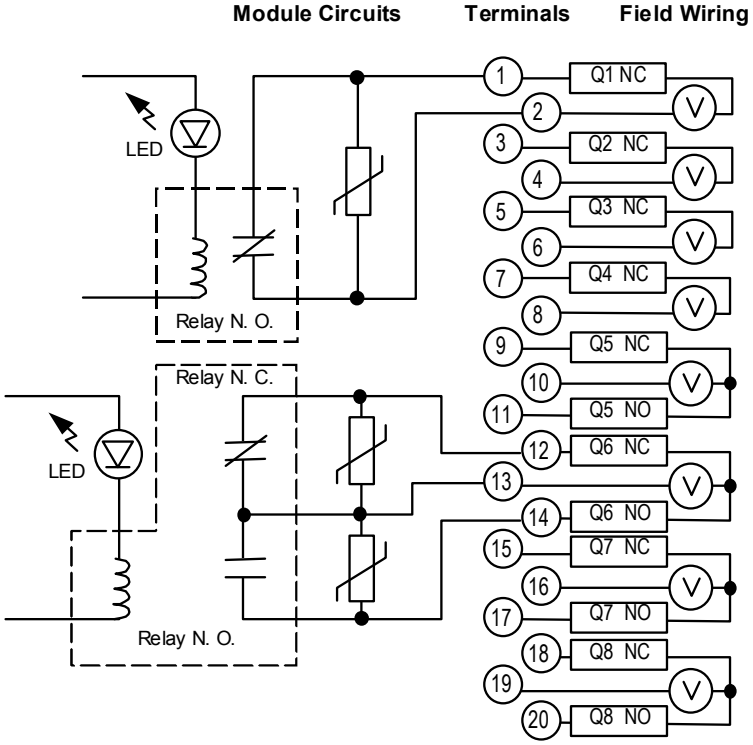

Load Current Limitations for MDL931

Operating Voltage	Maximum Current for Load Type		Typical Contact Life (Number of operations)
	Resistive	Lamp or Solenoid *	
5 to 120 VAC	8 Amps	3 Amps	200,000
	6 Amps	2.5 Amps	300,000
	4 Amps	1.5 Amps	400,000
	1 Amp	0.5 Amp	1,100,000
240 VAC	8 Amps	3 Amps	100,000
	6 Amps	2.5 Amps	150,000
	4 Amps	1.5 Amps	200,000
	1 Amp	0.5 Amp	800,000
24 VDC	8 Amps	3 Amps	100,000
	6 Amps	2.5 Amps	150,000
	4 Amps	1.5 Amps	200,000
	1 Amp	0.5 Amp	800,000
48 VDC	1.5 Amps	–	100,000
100 VDC	0.5 Amp	–	100,000
125 VDC	0.38 Amp	0.12 Amp	100,000
150 VDC	0.30 Amp	0.10 Amp	100,000

* For inductive loads

Relay contact life, when switching inductive loads, will approach resistive load contact life if suppression circuits are used. The examples below show typical suppression circuits for AC and DC loads. The 1A, 200V diode shown in the DC load typical suppression circuit is an industry standard 1N4935. The resistor and capacitor shown for AC load suppression are standard components.

Load Suppression Examples for Output Module IC694MDL931

