FIELD INSTALLATION QUICK GUIDE

Installation Instructions

IC694MDL931

8-point isolated relay output module

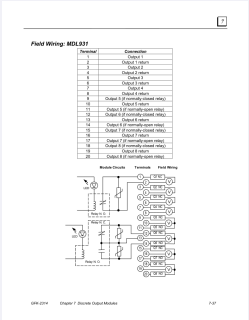

PRODUCT	IC694MDL931
FAMILY	GE PACSystems RX3i
FUNCTION	8-point isolated relay output module
STATUS	Verify exact installed equipment

Prepared by Amikon Limited from General Electric documentation. This guide supplements the complete manufacturer manual and site procedure.

01 CONFIRM THE ORDERED CONFIGURATION

Output count	8 isolated outputs
Contact arrangement	4 normally closed and 4 Form C
Nominal field voltage	24 V DC; 120/240 V AC, 50/60 Hz
DC switching range	5-30 V DC; higher-voltage limits in load table
AC switching range	5-250 V AC, 50/60 Hz
Resistive current per point	8 A maximum, subject to thermal/load limits

02 PREPARATION AND CONNECTION

- Identify four NC circuits and four Form C circuits.
- Isolate each external field circuit before wiring.
- Keep every output common separate as shown in the terminal table.
- Apply point, total-current and thermal restrictions for the actual load.

03

OFFICIAL INSTALLATION REFERENCE

Field Wiring: MDL931

Terminal	*Connection*
1	Output 1
2	Output 1 return
3	Output 2
4	Output 2 return
5	Output 3
6	Output 3 return
7	Output 4
8	Output 4 return
9	Output 5 (if normally-closed relay)
10	Output 5 return
11	Output 5 (if normally-open relay)
12	Output 6 (if normally-closed relay)
13	Output 6 return
14	Output 6 (if normally-open relay)
15	Output 7 (if normally-closed relay)
16	Output 7 return
17	Output 7 (if normally-open relay)
18	Output 8 (if normally-closed relay)
19	Output 8 return
20	Output 8 (if normally-open relay)

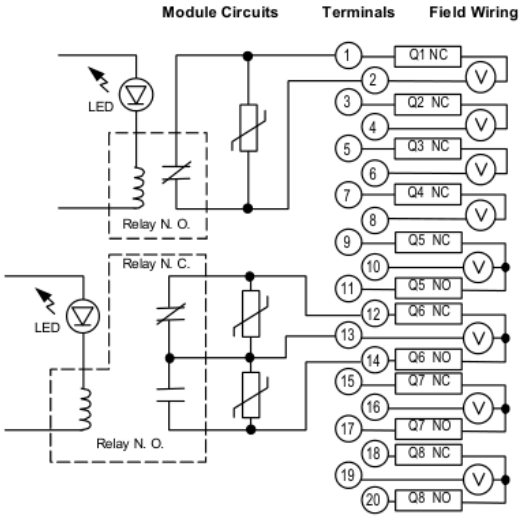

Official manufacturer page reproduced at its original aspect ratio.

04 COMMISSIONING CHECKS

01	Identify four NC circuits and four Form C circuits.
02	Isolate each external field circuit before wiring.
03	Keep every output common separate as shown in the terminal table.
04	Apply point, total-current and thermal restrictions for the actual load.
05	Complete the model-specific functional checks in the manufacturer instructions.
06	Record the restored configuration and test results before return to service.

05 CONTROLLED DOCUMENT

Official source	GE Fanuc PACSystems RX3i System Manual GFK-2314, June 2004, pages 7-35 to 7-38.
Product record	IC694MDL931
Manufacturer	General Electric
Warranty	12 months from AMIKON
Support	INFO@AMIKON.CN

AMIKON PRODUCT SUPPORT

+86-18020776786 INFO@AMIKON.CN **AMIKONG.COM**