MANUFACTURER DOCUMENT PACKAGE

Manufacturer's Manual

Reference package for procurement and maintenance review

GENERAL ELECTRIC

IC695ALG628

8-CHANNEL HART ANALOG INPUT MODULE

Used with the applicable GE PACSystems RX3i configuration.

REFERENCE PACKAGE

OFFICIAL DOCUMENT

Selected official manufacturer pages follow this cover.

Source: Emerson PACSystems GFK-2372V, December 2022; ALG628 specifications, wiring and application restrictions.

IMPORTANT PRODUCT INFORMATION

GFK-2372V

Dec 2022

PACSystems™ RX3i

NON-ISOLATED ANALOGUE INPUT MODULES WITH HART COMMUNICATION (IC695ALG626, IC695ALG628)

NON-ISOLATED ANALOGUE INPUT MODULES (IC695ALG608 & IC695ALG616)

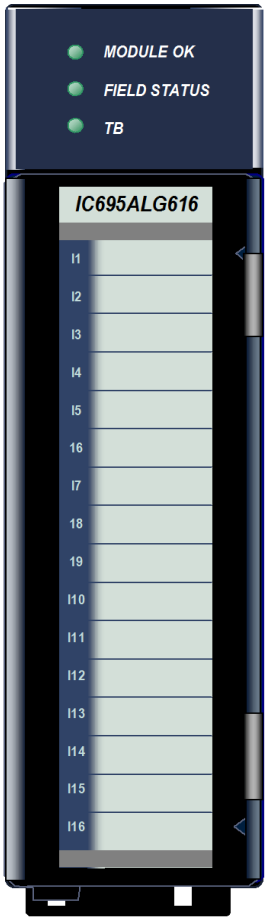

EMERSON™

Product Description

Non-Isolated Differential Analog Current/Voltage Input module IC695ALG608 and Non-Isolated Differential Analog Current/Voltage Input module IC695ALG628 provide eight single-ended or four differential input channels. IC695ALG628 also features HART version 5.0 communications capability on each channel.

Non-Isolated Differential Analog Current/Voltage Input module IC695ALG616, shown at left, and Non-Isolated Differential Analog Current/Voltage Input module IC695ALG626 provide sixteen single-ended or eight differential input channels. IC695ALG626 also features HART version 5.0 communications capability on each channel.

Analog input channels can be configured for these ranges:

- Current: 0 to 20mA, 4 to 20mA, ± 20mA
- Voltage: ±10V, 0 to 10V, ±5V, 0 to 5V, 1 to 5V

On modules IC695ALG626 and ALG628, channels that will use HART communications must be configured for the 4–20mA range.

These modules must be located in an RX3i Universal Backplane. They can be installed or removed while power is applied to the system (hot swapped.)

These modules can be used with a Box-style (IC694TBB032), Extended Box-style (IC694TBB132), Spring-style (IC694TBS032), or Extended Spring-style (IC694TBS132) Terminal Block. Extended terminal blocks provide the extra shroud depth needed for shielded wiring. Refer to the PACSystems RX3i System Manual, GFK-2314 revision B or later for more information about Terminal Blocks. Terminal Blocks are ordered separately.

Module Features

- Completely software-configurable, no module jumpers to set
- Full autocalibration
- On-board error-checking
- Open-circuit detection for all voltage and 4-20mA inputs
- Configurable scaling and offsets per channel
- High alarm, low alarm, high-high alarm, low-low alarm detection, and reporting selectable per channel
- Module fault reporting
- Supports diagnostic point fault contacts in the logic program
- Flash memory for future upgrades
- Positive and negative Rate of Change Alarms
- Autocalibration at startup
- Configurable interrupts for channel alarms and faults
- Terminal Block insertion or removal detection
- HART Version 5.0 communications on modules IC695ALG626 and IC695ALG628.

Specifications

Specification	Description		
Input Ranges	Current: 0 to 20 mA, 4 to 20 mA, ±20 mA Voltage: ±10V, 0 to 10V, ±5V, 0 to 5V, 1 to 5V		
Backplane Power Requirements	ALG608: 200 mA maximum @ 5.0V +5% / -2.5%, 200 mA maximum @ 3.3V +5% / -3% ALG616: 350 mA maximum @ 5.0V +5% / -2.5%, 200 mA maximum @ 3.3V +5% / -3% ALG626: 400 mA maximum @ 5.0V +5% / -2.5%, 200 mA maximum @ 3.3V +5% / -3% ALG628: 260 mA maximum @ 5.0V +5% / -2.5%, 200 mA maximum @ 3.3V +5% / -3%		
Power Dissipation within Module	IC695ALG608: 2.58 W maximum; IC695ALG616: 4.25 W maximum IC695ALG626: 4.50 W maximum; IC695ALG628: 2.83 W maximum		
Thermal Derating	IC695ALG608 and ALG616: no derating IC695ALG628: no derating Module IC695ALG626 has no thermal derating in voltage mode. For thermal derating for module IC695ALG626 in current mode, refer to page 4.		
Resolution	24-bit ADC converted to Floating Point or Integer		
Input Data Format	Configurable as floating point IEEE 32-bit or 16-bit integer in a 32-bit field		
Filter Options	8Hz, 12Hz, 16Hz, 40Hz, 200Hz, 500Hz		
HART Communications	Version 5.0 HART protocol supported on modules IC695ALG626 and IC695ALG628.		
Input Impedance	>100 kΩ voltage inputs		
Current Input Resistance	249 Ω ±1%		
Open Circuit Detection time	1 second maximum		
Overvoltage	±60 VDC continuous, maximum		
Overcurrent	±28mA continuous, maximum		
Normal Mode Noise Rejection in dB		At 50Hz	At 60Hz
	8 Hz filter	85	85
	12 Hz filter	85	85
	16 Hz filter	35	62
	40 Hz filter	3	6
	200 Hz filter	0	0
	500 Hz	0	0
Common Mode Noise Rejection	120dB minimum @ 50/60 Hz with 8 Hz filter 110dB minimum @ 50/60 Hz with 12 Hz filter		
Channel-Channel DC Crosstalk	-80 dB minimum (single-ended mode) -80 dB minimum (differential mode, grounded common) -60 dB minimum (differential mode, floating common)		
Isolation Voltage terminal block to backplane/chassis	Opto-isolated, transformer isolated 250 VAC continuous/1500 VAC for 1 minute		

<table>
<tr><th>Specification</th><th>Description</th></tr>
<tr><td>Analog Module Scan Time (in milliseconds)

Configured Filter</td><td>The module scan for analog signals can consist of up to four acquisition cycles. Each cycle includes a specific set of channels. Total Scan Time depends on the number of acquisition cycles in the scan, the configured filter option, and whether channels are
<table>
<tr><td colspan="9">Number of Acquisition Cycles in the Scan (IC695ALG608/616/626/628- Ex and</td></tr>
<tr><td colspan="2">1</td><td colspan="2">2</td><td colspan="2">3</td><td colspan="2">4</td></tr>
<tr><td>Analog</td><td>HART</td><td>Analog</td><td>HART</td><td>Analog</td><td>HART</td><td>Analog</td><td>HART</td></tr>
<tr><td>8 Hz filter</td><td>121</td><td>128</td><td>241</td><td>254</td><td>362</td><td>380</td><td>482</td><td>50</td></tr>
<tr><td>12 Hz filter</td><td>81</td><td>88</td><td>161</td><td>174</td><td>242</td><td>260</td><td>322</td><td>34</td></tr>
<tr><td>16 Hz filter</td><td>61</td><td>68</td><td>121</td><td>134</td><td>182</td><td>200</td><td>242</td><td>26</td></tr>
<tr><td>40 Hz filter</td><td>21</td><td>28</td><td>41</td><td>54</td><td>62</td><td>80</td><td>82</td><td>10</td></tr>
<tr><td>200 Hz filter</td><td>5</td><td>12</td><td>9</td><td>22</td><td>14</td><td>32</td><td>18</td><td>4</td></tr>
<tr><td>500 Hz filter [with filtering and rate detection disabled]</td><td>3</td><td>N/A</td><td>5
[6]</td><td>N/A</td><td>7
[9]</td><td>N/A</td><td>9
[12]</td><td>N/A</td></tr>
<tr><td colspan="9">Number of Acquisition Cycles in the Scan (C695ALG608/616/626/628- Fx and</td></tr>
<tr><td colspan="2">1</td><td colspan="2">2</td><td colspan="2">3</td><td colspan="2">4</td></tr>
<tr><td>Analog</td><td>HART</td><td>Analog</td><td>HART</td><td>Analog</td><td>HART</td><td>Analog</td><td>HART</td></tr>
<tr><td>8 Hz filter</td><td>122</td><td>124</td><td>247</td><td>248</td><td>367</td><td>375</td><td>494</td><td>50</td></tr>
<tr><td>12 Hz filter</td><td>82</td><td>85</td><td>164</td><td>169</td><td>247</td><td>255</td><td>329</td><td>33</td></tr>
<tr><td>16 Hz filter</td><td>62</td><td>65</td><td>127</td><td>130</td><td>188</td><td>191</td><td>252</td><td>25</td></tr>
<tr><td>40 Hz filter</td><td>25</td><td>26</td><td>50</td><td>50</td><td>76</td><td>72</td><td>100</td><td>9</td></tr>
<tr><td>200 Hz filter</td><td>6</td><td>12</td><td>12</td><td>17</td><td>19</td><td>24</td><td>26</td><td>3</td></tr>
<tr><td>500 Hz filter [with filtering and rate detection disabled]</td><td>3</td><td>N/A</td><td>7
[6]</td><td>N/A</td><td>11
[9]</td><td>N/A</td><td>15
[12]</td><td>N/A</td></tr>
</table>
</td></tr>
<tr><td>HART Data Scan Time (in seconds)</td><td>The HART data scan can consist of up to four acquisition cycles (similar but asynchronous to the analog scan time). Each cycle includes a specific set of channels. Total HART scan time depends on the number of channels enabled for HART within a specific set of channels, the number of retries, enabling/disabling of slot variables, and use and configuration settings of pass-thru commands.
<table>
<tr><td>Channels in Group Enabled for</td><td>Each HART Data channel updates every:</td></tr>
<tr><td>One</td><td>0.7 second (typical)</td></tr>
<tr><td>Two</td><td>1.9 seconds (typical)</td></tr>
<tr><td>Three</td><td>3.0 seconds (typical)</td></tr>
<tr><td>Four</td><td>4.0 seconds (typical)</td></tr>
</table>
</td></tr>
</table>

Specification	Description
Calibrated Accuracy In the presence of severe RF interference (IC 801-3, 10V/M), accuracy may be degraded by ±1.5% of the range.	From 13°C – 33°C: ±5V, ±10V, ± 20 mA: 0.05% of range. 0 to 10V, 0 to 5V, 1 to 5V, 0 to 20 mA: 0.1% of range. 4 to 20 mA: 0.125% of range.
	From 0°C – 60°C: 0 to 10V, 0 to 5V, 1 to 5V: 0.2% of range. 0 to 20 mA: 0.25% of range. 4 to 20 mA: 0.3125% of range.
Calibration Interval	12 months is typical to meet accuracy specifications over time. Offset can be applied as a periodic calibration adjustment.

Installation Location

This product is intended for use with the RX3i system. Its components are considered open equipment (having live electrical parts that may be accessible to users) and must be installed in an ultimate enclosure that is manufactured to provide safety. At a minimum, the enclosure shall provide a degree of protection against solid objects as small as 12mm (fingers, for example). This equates to a NEMA/UL Type 1 enclosure or an IEC60529 IP20 rating providing at least a pollution degree 2 environment. For details about installing RX3i rack systems, refer to *PACSystems RX3i System Manual*, GFK-2314.

For complete installation information, please refer to RX3i and Series 90-30 Installation and Maintenance Requirements document, GFK-2975.

Thermal Derating

For module IC695ALG626 in current mode, the number of inputs that can be on at the same time depends on the ambient temperature as shown below.

Figure 1: Thermal Derating

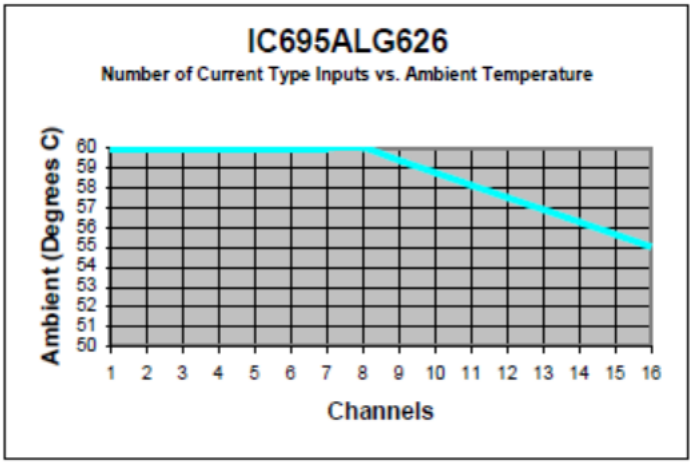

LED STATUS

The **Module OK** LED indicates module status. The **Field Status** LED indicates the presence of a fault on at least one channel or a terminal block error. The **TB** (Terminal Block) LED indicates the presence or absence of the terminal block.

LEDs are powered by the backplane power bus.

LED	State	Indicates
Module OK	ON Green	Module OK and configured
	Green or Amber, blinking slowly	Error
	Green, blinking rapidly	Module OK but not configured
	OFF	Module is defective or no backplane power present
Field Status	ON Green	No faults on any enabled channel and Terminal Block is
	ON Yellow	Fault on at least one channel
	OFF	Terminal block not present or not fully seated
TB	ON Red	Terminal block not present or not fully seated
	ON Green	Terminal block is present
	OFF	No backplane power to the module

Field Wiring, Single-Ended Mode

The table below lists wiring connections for Non-Isolated Analog Input Modules in Single-ended mode. Single-ended mode is the configured default operating mode.

Terminal	8-Channel Modules	16-Channel Modules	8-Channel Modules	16-Channel Modules	Terminal
1	Channel 1 IN+		Channel 1 Current Return (IRTN1)		19
2	Channel 2 IN+		Channel 2 Current Return (IRTN2)		20
3	Channel 3 IN+		Channel 3 Current Return (IRTN3)		21
4	Channel 4 IN+		Channel 4 Current Return (IRTN4)		22
5	Common		Common		23
6	Channel 5 IN+		Channel 5 Current Return (IRTN5)		24
7	Channel 6 IN+		Channel 6 Current Return (IRTN6)		25
8	Channel 7 IN+		Channel 7 Current Return (IRTN7)		26
9	Channel 8 IN+		Channel 8 Current Return (IRTN8)		27
10	No Connection	Channel 9 IN+	No Connection	Channel 9 Current Return	28
11	No Connection	Channel 10 IN+	No Connection	Channel 10 Current Return	29
12	No Connection	Channel 11 IN+	No Connection	Channel 11 Current Return	30
13	No Connection	Channel 12 IN+	No Connection	Channel 12 Current Return	31
14	Common		Common		32
15	No Connection	Channel 13 IN+	No Connection	Channel 13 Current Return	33
16	No Connection	Channel 14 IN+	No Connection	Channel 14 Current Return	34
17	No Connection	Channel 15 IN+	No Connection	Channel 15 Current Return	35
18	No Connection	Channel 16 IN+	No Connection	Channel 16 Current Return	36

There are no shield terminals on these modules. For shielding, tie cable shields to the ground bar along the bottom of the backplane. M3 tapped holes are provided in the ground bar for this purpose.

All the common terminals are connected internally, so any common terminal can be used for the negative lead of the external power supply.

Figure 2: Field wiring - Single End Mode

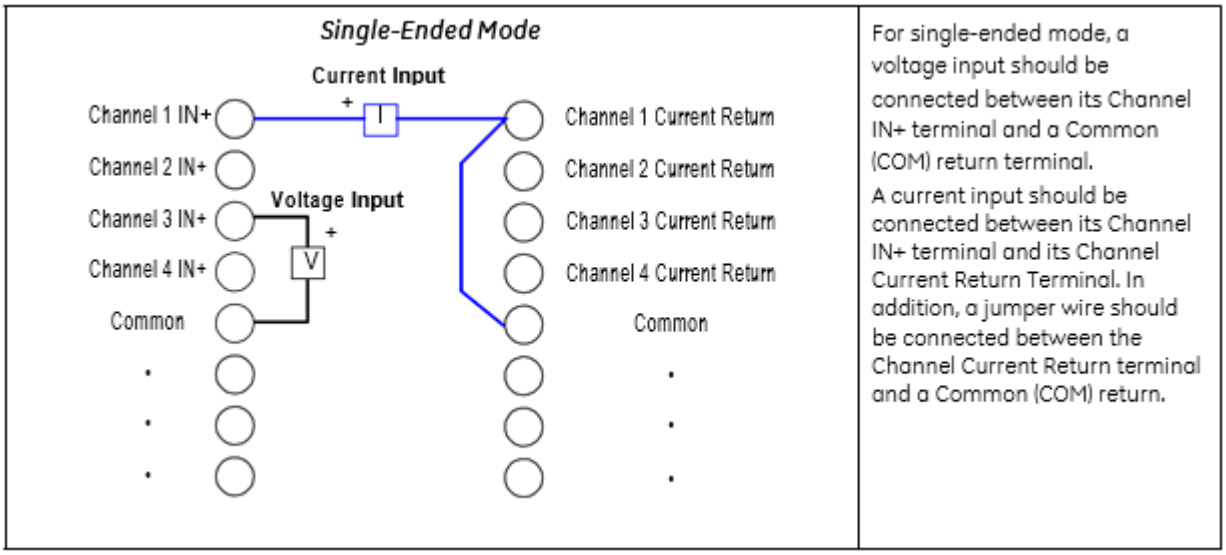

Field Wiring, Differential Mode

The table below lists wiring connections for Non-Isolated Analog Input Modules configured for Differential mode.

Terminal	8-Channel Modules	16-Channel Modules	8-Channel Modules	16-Channel Modules	Terminal
1	Channel 1 IN+		Channel 1 Current Return (IRTN1)		19
2	Channel 1 IN-		No Connection		20
3	Channel 2 IN+		Channel 2 Current Return (IRTN2)		21
4	Channel 2 IN-		No Connection		22
5	Common		Common		23
6	Channel 3 IN+		Channel 3 Current Return (IRTN3)		24
7	Channel 3 IN-		No Connection		25
8	Channel 4 IN+		Channel 4 Current Return (IRTN4)		26
9	Channel 4 IN-		No Connection		27
10	No Connection	Channel 5 IN+	No Connection	Channel 5 Current Return (IRTN5)	28
11	No Connection	Channel 5 IN-	No Connection		29
12	No Connection	Channel 6 IN+	No Connection	Channel 6 Current Return (IRTN6)	30
13	No Connection	Channel 6 IN-	No Connection		31
14	Common		Common		32
15	No Connection	Channel 7 IN+	No Connection	Channel 13 Current Return (IRTN7)	33
16	No Connection	Channel 7 IN-	No Connection		34
17	No Connection	Channel 8 IN+	No Connection	Channel 15 Current Return (IRTN8)	35
18	No Connection	Channel 8 IN-	No Connection		36

There are no shield terminals on these modules. For shielding, tie cable shields to the ground bar along the bottom of the backplane. M3 tapped holes are provided in the ground bar for this purpose.

HART Modules Channel Faults

For IC695ALG626 (all revisions) and IC695ALG628 (all revisions): additional high and high-high alarms may be triggered for channels 1, 5, 9, or 13 (the first channel in each multiplexed group) when dropping the channel input from an over-range condition. Additionally, the affected channels may experience high channel readings if open circuited and voltages over 6V are present on other channels within their multiplexed group.