FIELD INSTALLATION QUICK GUIDE

Installation Instructions

IC695ALG628

8-channel HART analog input module

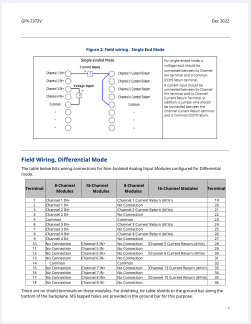

PRODUCT	IC695ALG628
FAMILY	GE PACSystems RX3i
FUNCTION	8-channel HART analog input module
STATUS	Verify exact installed equipment

Prepared by Amikon Limited from General Electric documentation. This guide supplements the complete manufacturer manual and site procedure.

01 CONFIRM THE ORDERED CONFIGURATION

Input topology	8 single-ended or 4 differential channels
Current ranges	0-20 mA, 4-20 mA or +/-20 mA
Voltage ranges	+/-10 V, 0-10 V, +/-5 V, 0-5 V or 1-5 V
A/D resolution	24-bit
Data representation	IEEE 32-bit floating point or 16-bit integer in a 32-bit field
HART protocol	Version 5.0; use 4-20 mA range

02 PREPARATION AND CONNECTION

- Use an RX3i Universal Backplane and the specified terminal block.
- Select single-ended or differential mode before assigning channels.
- Configure 4-20 mA on every HART-enabled channel.
- Restore shield, common and voltage/current terminal connections.

03

OFFICIAL INSTALLATION REFERENCE

GFK-2372V Dec 2022

Figure 2: Field wiring - Single End Mode

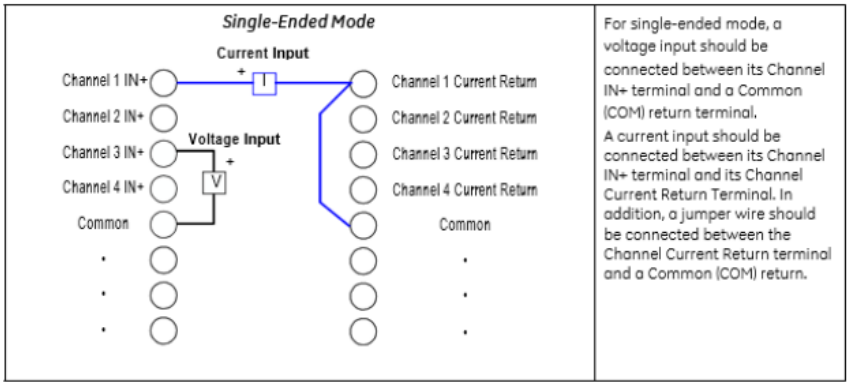

Field Wiring, Differential Mode

The table below lists wiring connections for Non-Isolated Analog Input Modules configured for Differential mode.

Terminal	8-Channel Modules	16-Channel Modules	8-Channel Modules	16-Channel Modules	Terminal
1	Channel 1 IN+		Channel 1 Current Return (IRTN1)		19
2	Channel 1 IN-		No Connection		20
3	Channel 2 IN+		Channel 2 Current Return (IRTN2)		21
4	Channel 2 IN-		No Connection		22
5	Common		Common		23
6	Channel 3 IN+		Channel 3 Current Return (IRTN3)		24
7	Channel 3 IN-		No Connection		25
8	Channel 4 IN+		Channel 4 Current Return (IRTN4)		26
9	Channel 4 IN-		No Connection		27
10	No Connection	Channel 5 IN+	No Connection	Channel 5 Current Return (IRTN5)	28
11	No Connection	Channel 5 IN-	No Connection		29
12	No Connection	Channel 6 IN+	No Connection	Channel 6 Current Return (IRTN6)	30
13	No Connection	Channel 6 IN-	No Connection		31
14	Common		Common		32
15	No Connection	Channel 7 IN+	No Connection	Channel 13 Current Return (IRTN7)	33
16	No Connection	Channel 7 IN-	No Connection		34
17	No Connection	Channel 8 IN+	No Connection	Channel 15 Current Return (IRTN8)	35
18	No Connection	Channel 8 IN-	No Connection		36

There are no shield terminals on these modules. For shielding, tie cable shields to the ground bar along the bottom of the backplane. M3 tapped holes are provided in the ground bar for this purpose.

7

Official manufacturer page reproduced at its original aspect ratio.

04 COMMISSIONING CHECKS

01	Use an RX3i Universal Backplane and the specified terminal block.
02	Select single-ended or differential mode before assigning channels.
03	Configure 4-20 mA on every HART-enabled channel.
04	Restore shield, common and voltage/current terminal connections.
05	Complete the model-specific functional checks in the manufacturer instructions.
06	Record the restored configuration and test results before return to service.

05 CONTROLLED DOCUMENT

Official source	Emerson PACSystems GFK-2372V, December 2022; ALG628 specifications, wiring and application restrictions.
Product record	IC695ALG628
Manufacturer	General Electric
Warranty	12 months from AMIKON
Support	INFO@AMIKON.CN

AMIKON PRODUCT SUPPORT

+86-18020776786 INFO@AMIKON.CN **AMIKONG.COM**