MANUFACTURER DOCUMENT PACKAGE

Manufacturer's Manual

Reference package for procurement and maintenance review

GENERAL ELECTRIC

IC694MDL646

16-POINT 24VDC FAST INPUT MODULE

Used with the applicable GE PACSystems RX3i configuration.

REFERENCE PACKAGE

OFFICIAL DOCUMENT

Selected official manufacturer pages follow this cover.

Source: GE Fanuc PACSystems RX3i System Manual GFK-2314C; MDL646 specifications and field wiring.

Input Module: 24 Volt DC 16 Point Pos/Neg Logic: IC694MDL646

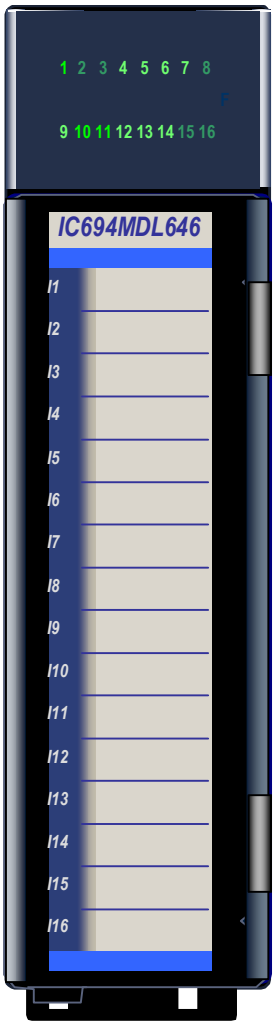

The ***24VDC Positive/Negative Logic 16 Point Input*** module, IC694MDL646, provides 16 input points in one group with a common power input terminal. *The on and off response times for this module are typically 1 ms.* This input module can be wired for either positive logic or negative logic. Input characteristics are compatible with a wide range of input devices, such as pushbuttons, limit switches, and electronic proximity switches. Current into an input point results in a logic 1 in the input status table (%I). Field devices can be powered from an external supply. Depending on their requirements, some input devices can be powered from the module's +24V OUT and 0V OUT terminals.

Sixteen green LEDs indicate the ON/OFF status of points 1 through 16. The blue bands on the label show that MDL646 is a low-voltage module.

This module can be installed in any I/O slot in an RX3i system.

Specifications: MDL646

Rated Voltage	24 volts DC
Input Voltage Range	0 to +30 volts DC
Inputs per Module	16 (one group with a single common)
Isolation: Field to Backplane (optical) and to frame ground	250 VAC continuous; 1500 VAC for one minute
Input Current	7mA (typical) at rated voltage
Input Characteristics	
On–state Voltage	11.5 to 30 volts DC
Off–state Voltage	0 to +5 volts DC
On–state Current	3.2mA minimum
Off–state Current	1.1mA maximum
On response Time	1ms typical
Off response Time	1ms typical
Power Consumption: 5V	80mA (all inputs on) from 5 volt bus on backplane
Power Consumption: 24V	125mA from the Isolated 24 volt backplane bus or from user supplied power

Refer to Appendix A for product standards and general specifications.

Field Wiring: MDL646

Terminals	Connections
1	Inputs 1-16 Common
2	Input 1
3	Input 2
4	Input 3
5	Input 4
6	Input 5
7	Input 6
8	Input 7
9	Input 8
10	Input 9
11	Input 10
12	Input 11
13	Input 12
14	Input 13
15	Input 14
16	Input 15
17	Input 16
18	24VDC for input devices
19	0V for input devices
20	No connection

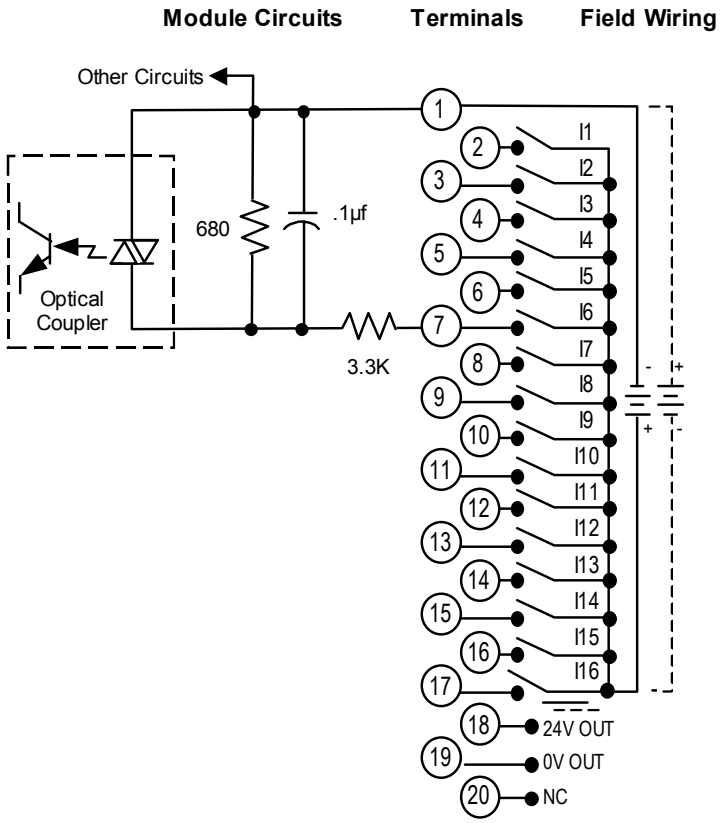

Note: If the 24V OUT pin is used to connect to input devices in the field, the isolation specification for this module changes to:

Field to Backplane (optical) and to frame ground: 50 VAC continuous; 500 VAC for 1 minute