FIELD INSTALLATION QUICK GUIDE

Installation Instructions

IC694MDL646

16-point 24VDC fast input module

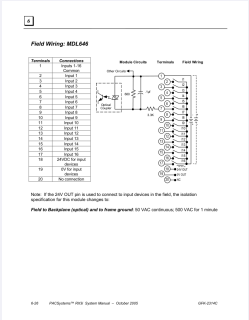

PRODUCT	IC694MDL646
FAMILY	GE PACSystems RX3i
FUNCTION	16-point 24VDC fast input module
STATUS	Verify exact installed equipment

Prepared by Amikon Limited from General Electric documentation. This guide supplements the complete manufacturer manual and site procedure.

01 CONFIRM THE ORDERED CONFIGURATION

Nominal input voltage	24 V DC
Operating input range	0-30 V DC
Input quantity	16
Input grouping	One common for all 16 points
Logic compatibility	Positive or negative
Continuous isolation	250 V AC field-to-backplane and frame

02 PREPARATION AND CONNECTION

- Confirm the 24 V positive/negative logic arrangement.
- Maintain the single input common and all point assignments.
- Check the external or isolated 24 V source capacity.
- Keep inactive-input leakage within the published limit.

03

OFFICIAL INSTALLATION REFERENCE

6

Field Wiring: MDL646

Terminals	*Connections*
1	Inputs 1-16 Common
2	Input 1
3	Input 2
4	Input 3
5	Input 4
6	Input 5
7	Input 6
8	Input 7
9	Input 8
10	Input 9
11	Input 10
12	Input 11
13	Input 12
14	Input 13
15	Input 14
16	Input 15
17	Input 16
18	24VDC for input devices
19	0V for input devices
20	No connection

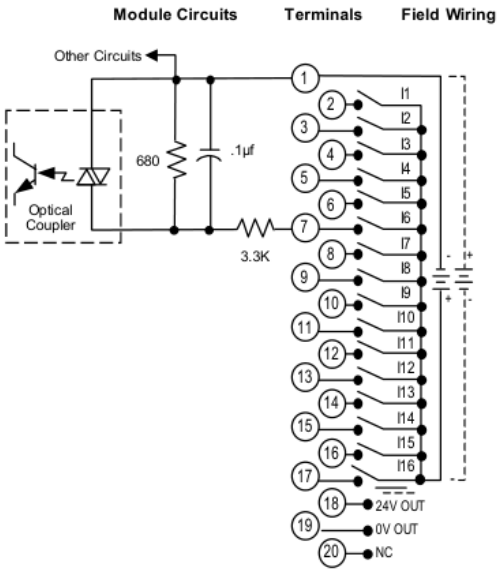

Note: If the 24V OUT pin is used to connect to input devices in the field, the isolation specification for this module changes to:

Field to Backplane (optical) and to frame ground: 50 VAC continuous; 500 VAC for 1 minute

Official manufacturer page reproduced at its original aspect ratio.

04 COMMISSIONING CHECKS

01	Confirm the 24 V positive/negative logic arrangement.
02	Maintain the single input common and all point assignments.
03	Check the external or isolated 24 V source capacity.
04	Keep inactive-input leakage within the published limit.
05	Complete the model-specific functional checks in the manufacturer instructions.
06	Record the restored configuration and test results before return to service.

05 CONTROLLED DOCUMENT

Official source	GE Fanuc PACSystems RX3i System Manual GFK-2314C; MDL646 specifications and field wiring.
Product record	IC694MDL646
Manufacturer	General Electric
Warranty	12 months from AMIKON
Support	INFO@AMIKON.CN

AMIKON PRODUCT SUPPORT

+86-18020776786 INFO@AMIKON.CN **AMIKONG.COM**