MANUFACTURER DOCUMENT PACKAGE

Manufacturer's Manual

Reference package for procurement and maintenance review

GENERAL ELECTRIC

IC694MDL916

16-POINT ISOLATED RELAY OUTPUT MODULE

Used with the applicable GE PACSystems RX3i configuration.

REFERENCE PACKAGE

OFFICIAL DOCUMENT

Selected official manufacturer pages follow this cover.

Source: GE Fanuc GFK-2404A, March 2009; IC694MDL916 ratings, default switch and field wiring.

PACSystems™ RX3i and Series 90™-30

IC694MDL916 and IC693MDL916

Output Module, Isolated Relay, N.O., 4 Amp, 16 Point

GFK-2404A
March 2009

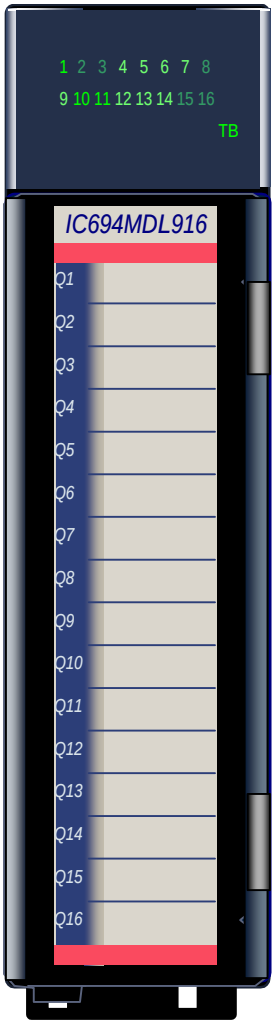

The ***4 Amp 16 Point Relay Output*** module provides 16 Form A relays for controlling output loads. The maximum output switching capacity of each circuit is 4 Amps. Each output point is isolated from the other points, and each point has a separate common power output terminal. Outputs provide a high degree of noise immunity, minimizing the need to add external snubbers. The relay outputs can control a wide range of output devices, such as: motor starters, solenoids, and indicators. The user must supply the AC or DC power to operate the field devices.

This module is available as a PACSystems RX3i module (catalog number IC694MDL916), illustrated at left, or as a Series 90-30 PLC module (catalog number IC693MDL916). The RX3i version is only compatible with a PACSystems RX3i CPU. The Series 90-30 version can be installed in any I/O slot in a PACSystems RX3i or Series 90-30 PLC. See the next page for details of specific CPU version requirements.

Module MDL916 can be used with a Box-style (IC694TBB032), Extended Box-style (IC694TBB132), Spring-style (IC694TBS032), or Extended Spring-style (IC694TBS132) Terminal Block. Extended terminal blocks provide the extra shroud depth typically needed for shielded wires. See the *PACSystems RX3i System Manual*, GFK-2314 revision B or later for more information about terminal blocks. Terminal Blocks are ordered separately.

A DIP switch on back of the module is used to select the outputs' default mode: Force Off or Hold Last State. The module must be removed from the backplane to set this switch.

Individually-numbered LEDs indicate the ON/OFF state of each output. The red/green TB LED is green when the module's removable terminal block is locked in place. It is red when the terminal block is not locked.

Module IC694MDL916 reports *Addition of Terminal Block, Loss of Terminal Block, Hold Last State Configuration Mismatch,* and *Module Over Temp* messages to the RX3i CPU. Module IC693MDL916 does not report diagnostic status to the CPU.

The red bands on the door card show that MDL916 is a high-voltage module.

Release Information

Release History

Release	Comments
IC693MDL916-AA, IC694MDL916-AA	Initial Release

Functional Compatibility

		Compatible CPU Versions	
Module	**Configuration Software**	**PACSystems RX3i**	**Series 90-30**
IC693MDL916	Proficy Machine Edition version 5.5, Service Pack 2 or later	Firmware version 3.81	CPU350 - 10.60, CPU352 - 10.50, CPU364 – 10.60, CPU374 - 11.03
IC694MDL916			Not compatible

Installation in Hazardous Locations

- EQUIPMENT LABELED WITH REFERENCE TO CLASS I, GROUPS A, B, C & D, DIV. 2 HAZARDOUS LOCATIONS IS SUITABLE FOR USE IN CLASS I, DIVISION 2, GROUPS A, B, C, D OR NON-HAZARDOUS LOCATIONS ONLY
- WARNING - EXPLOSION HAZARD - SUBSTITUTION OF COMPONENTS MAY IMPAIR SUITABILITY FOR CLASS I, DIVISION 2;
- WARNING - EXPLOSION HAZARD - WHEN IN HAZARDOUS LOCATIONS, TURN OFF POWER BEFORE REPLACING OR WIRING MODULES; AND
- WARNING - EXPLOSION HAZARD - DO NOT CONNECT OR DISCONNECT EQUIPMENT UNLESS POWER HAS BEEN SWITCHED OFF OR THE AREA IS KNOWN TO BE NONHAZARDOUS.

Specifications

Refer to the *PACSystems RX3i System Manual*, GFK-2314, for product standards and general specifications.

Outputs per Module	16 isolated Form A relay outputs
External Power Supply	0 – 125VDC (5/24/125 VDC nominal) 0 – 250VAC (47 to 63 Hz), 120-240VAC nominal
Isolation	
Field to Backplane and to Frame Ground, Group to Group	250 VAC continuous; 1500 VAC for 1 minute.
Power Consumption	300mA at 5VDC from backplane maximum (all outputs ON)
Thermal Derating	See next page
Output Characteristics	
Output Voltage	5 – 125VDC (5/24/125 VDC nominal) 5 – 250VAC (47 to 63 Hz), 120-240VAC nominal
Output Current	10mA per point minimum 4A for 5-250VAC maximum (resistive or general purpose) 4A for 5-30VDC maximum (resistive) 200mA for 125VDC (maximum resistive) 2A pilot duty per output (5 to 30VDC, 5 to 250VAC) 2A lamp load per output (5 to 30VDC, 5 to 250VAC)
Output Voltage Drop	0.3VDC maximum
Output Leakage Current	Not Applicable (open contact)
Response Times (On/Off)	10ms maximum (At nominal voltage excluding contact bounce)
Switching Frequency	20 cycles per minute maximum
Protection	None. External snubbers may be applied if necessary
Relay Contact Life	See chart on the next page
Diagnostic Information	Field side terminal block presence detection reported to CPU (for RX3i only)

* When this module is used with DC power supply IC695PSD040 or PSD140, special precautions should be taken because dropouts in the source voltage will be seen by this module and may cause relay dropouts.

Thermal Derating

The table below shows the number of outputs that can be on at the same time under the maximum load of 4 Amps per point.

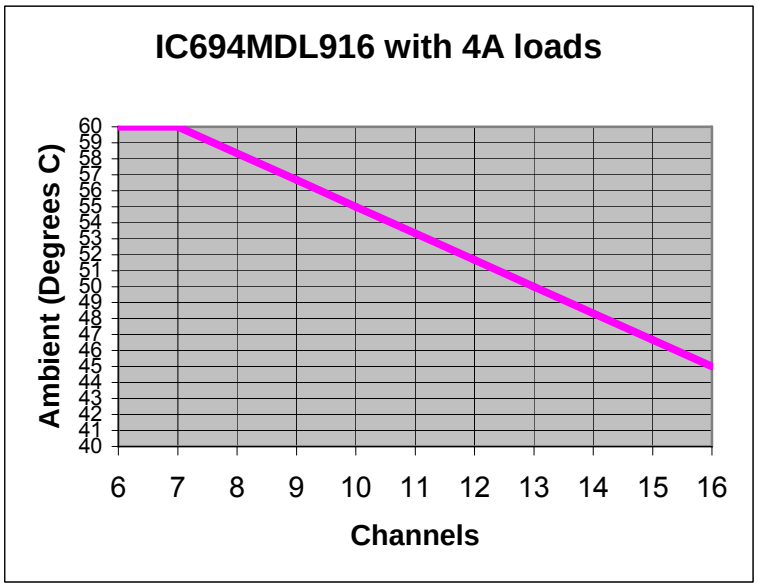

Load Current Limitations

Operating Voltage	Maximum Current for Load Type		Typical Contact Life (Number of Operations)
	Resistive	Lamp or Solenoid *	
5 to 250 VAC	4 Amps	2 Amps	200,000
5 to 250 VAC	0.1 Amp	0.05 Amp	1,000,000
5 to 250 VAC	1 Amp	0.5 Amp	700,000
5 to 30 VDC	4 Amps	2 Amps	200,000
5 to 30 VDC	1 Amp	0.5 Amp	700,000
5 to 30 VDC	0.1 Amp	0.05 Amp	1,000,000

* Assumes a 7ms L/R time constant (DC inductive load) or Cos φ $\geq$ 0.4 (AC inductive load)

Setting the Output Defaults

The DIP switch on back of the module determines how the outputs will operate if the CPU is set to Stop Mode or loses communications with the module. The Outputs Default Mode selection made with the DIP switch must match the selection made for this feature in the module's software configuration. If the two do not match, a warning message is displayed in the fault table.

The module must be removed from the backplane to set this switch. Note that there are two DIP switches on the module. Only the upper switch is used.

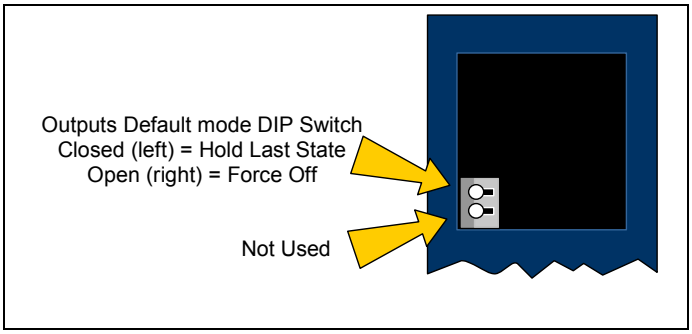

With the Outputs Default Mode switch in the right (open) position, the outputs will turn off whenever communication with the CPU is lost.

When the switch is in the left position, the outputs will hold their last programmed value whenever communication with the CPU is lost. Backplane power must be present to Hold Last State. Otherwise, the module will default outputs regardless of the DIP switch setting.

Field Wiring: MDL916

Connections	Terminals	Terminals	Connections
Output 1, Normally-Open	1	19	Output 9, Normally-Open
Output 1 Return	2	20	Output 9 Return
Output 2, Normally-Open	3	21	Output 10, Normally-Open
Output 2 Return	4	22	Output 10 Return
Output 3, Normally-Open	5	23	Output 11, Normally-Open
Output 3 Return	6	24	Output 11 Return
Output 4, Normally-Open	7	25	Output 12, Normally-Open
Output 4 Return	8	26	Output 12 Return
Output 5, Normally-Open	9	27	Output 13, Normally-Open
Output 5 Return	10	28	Output 13 Return
Output 6, Normally-Open	11	29	Output 14, Normally-Open
Output 6 Return	12	30	Output 14 Return
No Connection	13	31	No Connection
Output 7, Normally-Open	14	32	Output 15, Normally-Open
Output 7 Return	15	33	Output 15 Return
No Connection	16	34	No Connection
Output 8, Normally-Open	17	35	Output 16, Normally-Open
Output 8 Return	18	36	Output 16 Return

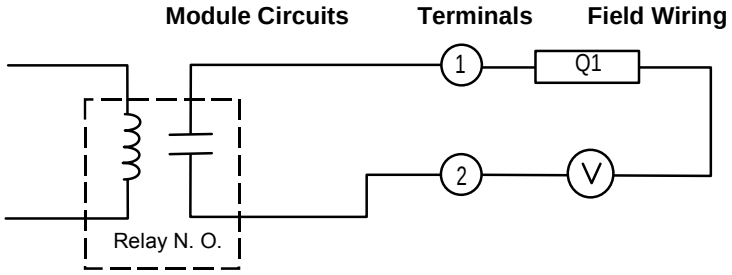

Suppression Circuits

Relay contact life, when switching inductive loads, will approach resistive load contact life if suppression circuits are used. Examples of typical suppression circuits for AC and DC loads are shown below. The 1A, 200V diode shown in the DC load typical suppression example is an industry standard 1N4935. The resistor and capacitor shown for AC load suppression are standard components, available from most electronics distributors.

