FIELD INSTALLATION QUICK GUIDE

Installation Instructions

IC694MDL732

8-point positive-logic DC output module

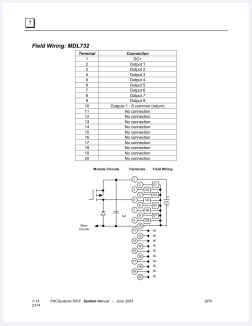

PRODUCT	IC694MDL732
FAMILY	GE PACSystems RX3i
FUNCTION	8-point positive-logic DC output module
STATUS	Verify exact installed equipment

Prepared by Amikon Limited from General Electric documentation. This guide supplements the complete manufacturer manual and site procedure.

01 CONFIRM THE ORDERED CONFIGURATION

Nominal field voltage	12/24 V DC
Permitted output voltage	12-24 V DC, +20% / -15%
Output points	8
Common arrangement	One group of 8 outputs
Logic direction	Positive, current-sourcing
Maximum point current	0.5 A

02 PREPARATION AND CONNECTION

- Connect DC+ to terminal 1 and return common to terminal 10.
- Wire outputs 1-8 through terminals 2-9.
- Provide suitable external protection; the module has no fuses.
- Limit every point to 0.5 A and the common total to 2 A.

03

OFFICIAL INSTALLATION REFERENCE

7

Field Wiring: MDL732

Terminal	*Connection*
1	DC+
2	Output 1
3	Output 2
4	Output 3
5	Output 4
6	Output 5
7	Output 6
8	Output 7
9	Output 8
10	Outputs 1 - 8 common (return)
11	No connection
12	No connection
13	No connection
14	No connection
15	No connection
16	No connection
17	No connection
18	No connection
19	No connection
20	No connection

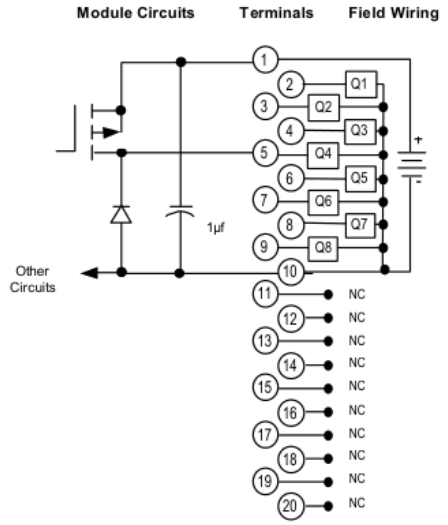

Official manufacturer page reproduced at its original aspect ratio.

04 COMMISSIONING CHECKS

01	Connect DC+ to terminal 1 and return common to terminal 10.
02	Wire outputs 1-8 through terminals 2-9.
03	Provide suitable external protection; the module has no fuses.
04	Limit every point to 0.5 A and the common total to 2 A.
05	Complete the model-specific functional checks in the manufacturer instructions.
06	Record the restored configuration and test results before return to service.

05 CONTROLLED DOCUMENT

Official source	GE Fanuc PACSystems RX3i System Manual GFK-2314, June 2004, pages 7-13 to 7-14.
Product record	IC694MDL732
Manufacturer	General Electric
Warranty	12 months from AMIKON
Support	INFO@AMIKON.CN

AMIKON PRODUCT SUPPORT

+86-18020776786 INFO@AMIKON.CN **AMIKONG.COM**