MANUFACTURER DOCUMENT PACKAGE

Manufacturer's Manual

Reference package for procurement and maintenance review

YOKOGAWA

AIP830-101 S2

SINGLE-LOOP OPERATION KEYBOARD

Used with the applicable CENTUM VP configuration.

REFERENCE PACKAGE

OFFICIAL DOCUMENT

Selected official manufacturer pages follow this cover.

Source: Yokogawa GS33K50C32-50E, 2nd edition, June 2013, AIP830 hardware, layout and suffix codes

General Specifications

Model AIP830
Operation Keyboard for Single-loop Operation

CENTUM VP

GS 33K50C32-50E

[Release 5]

■ GENERAL

This document describes the hardware specifications of AIP830 Operation Keyboard for Single-loop Operation for Desktop Type HIS.
It contains an independent USB speaker (a sound function) other than buzzing alarms (buzzer sounds).
An AIP830 keyboard can be used per one Desktop Type HIS.

■ HARDWARE SPECIFICATIONS

For installation specifications and environmental conditions, which are common to the systems, refer to “System Overview” (GS 33K01A10-50E, GS 33K01A20-50E).

- Type: Flat keyboard (Sound Function: USB Speaker)
- PC Interface:
  Interface Connector: USB A type x 2 (*1)
  Conformable USB standard
  Operation Keyboard Function : USB 2.0 (Full-speed, Bus-powered)
  Sound Function : USB 1.1 (Full-speed, Bus-powered)
- Input Voltage: 5 V±5 % (Supplied from USB Port of PC)
- Maximum Consumption Current: 1 A
- Weight: 2.0kg (Without VESA Bracket), 2.5 kg (With VESA Braceket) (*2)
- Chassis Color: Black (Equivalent to Munsell No. N1.5)
- AIP830 belongs to IEC 61010-1 installation category Class I
  (A device not directly connected with the main power supply).
- Operating Environment
  Ambient temperature:
  5 to 40 °C (for normal operaiton)
  -20 to 60 °C (in storage and transportation)
  Ambient humidity:
  20 to 80 %RH (Non-condensing)

*1: Both connectors must always be connected directly to a PC.
*2: AIP830 with VESA Bracket must be mounted where it holds at least 10 kg of weight.

■ REGULATORY COMPLIANCE

For the detailed information of the following standards, refer to “System Overview” (GS 33K01A10-50E,GS 33K01A20 -50E).

Safety Standards
[CSA] (*1)
[CE Marking] (*2)

EMC Conformity Standards
[CE Marking] (*2) (*5)
[C-Tick Marking] (*3)
[KC Marking] (*4)

*1: AIP830 complies to CSA only when CSA mark is indicated on the PC which connects with AIP830.
*2: AIP830 complies to CE Marking only when CE mark is indicated on the PC which connects with AIP830.
*3: AIP830 complies to C-tick marking ionly when it is indicated on the PC which connects with AIP830.
*4: AIP830 complies to KC Marking only when KC mark is indicated on the PC which connects with AIP830.
*5: EN 61000-3-2 and EN 61000-3-3 in CE Marking are out of scope for AIP830.

YOKOGAWA

Yokogawa Electric Corporation
2-9-32, Nakacho, Musashino-shi, Tokyo, 180-8750 Japan
Tel.: 81-422-52-5634 Fax.: 81-422-52-9802

GS 33K50C32-50E
©Copyright Dec. 2012 (YK)
2nd Edition June 12, 2013 (YK)

■ LAYOUT

The Operation Keyboard is composed of both alphanumeric keys and special operation keys.
It also has special window call keys grouped by function and 64 user-definable funciton keys which are used for process control and plant monitoring.

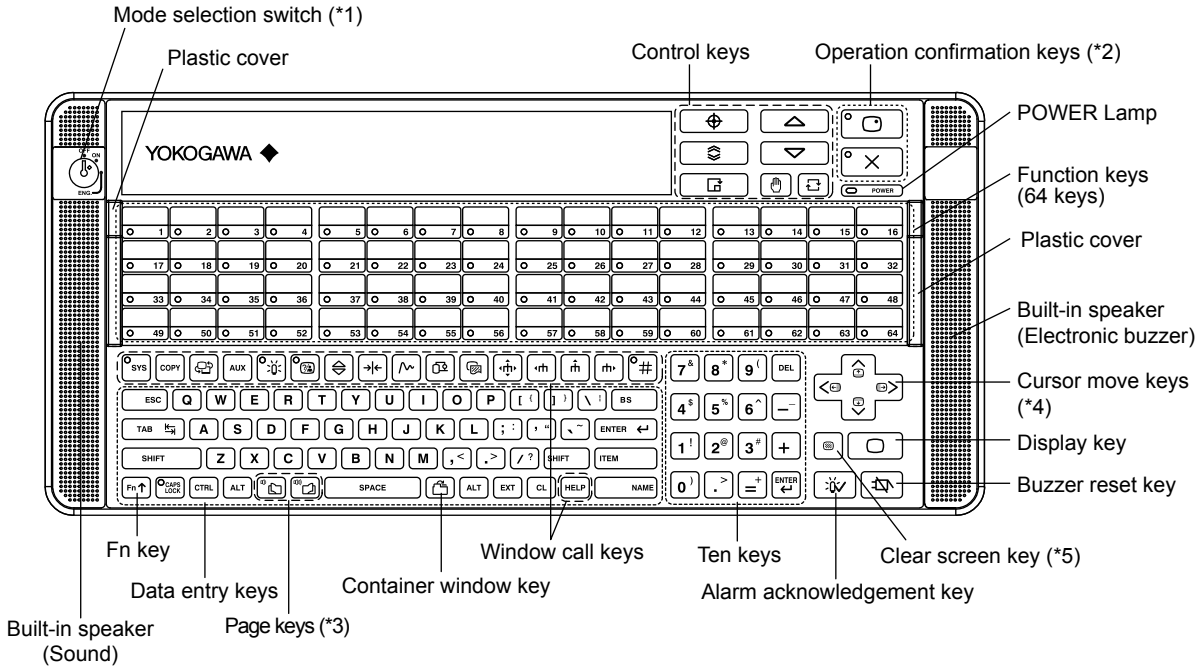

*1: With or without “Mode selection switch” is selectable by the suffix code.
*2: Two types of operation confirmation key symbols are selectable by the suffix codes.

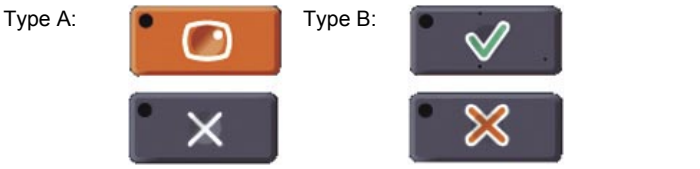

F04E.ai

*3: These keys also serve as “Volume control keys” when pressed simultaneously with Fn key.
*4: These keys also serve as “Scroll Keys” when pressed simultaneously with Fn key.
*5: Clear screen key becomes effective when pressed simultaneously with Fn key.
(Clear screen key is enabled without pressing Fn key by changing the hardware settings.)

Figure Operation Keyboard and Names of Parts

■ RESTRICTIONS FOR R5.01 AND R5.02

Up to 32 function keys (No.1 to 32) are available.

Container window key is not usable.

All Rights Reserved. Copyright © 2012, Yokogawa Electric Corporation

■ EXTERNAL DIMENSIONS

Unit : mm

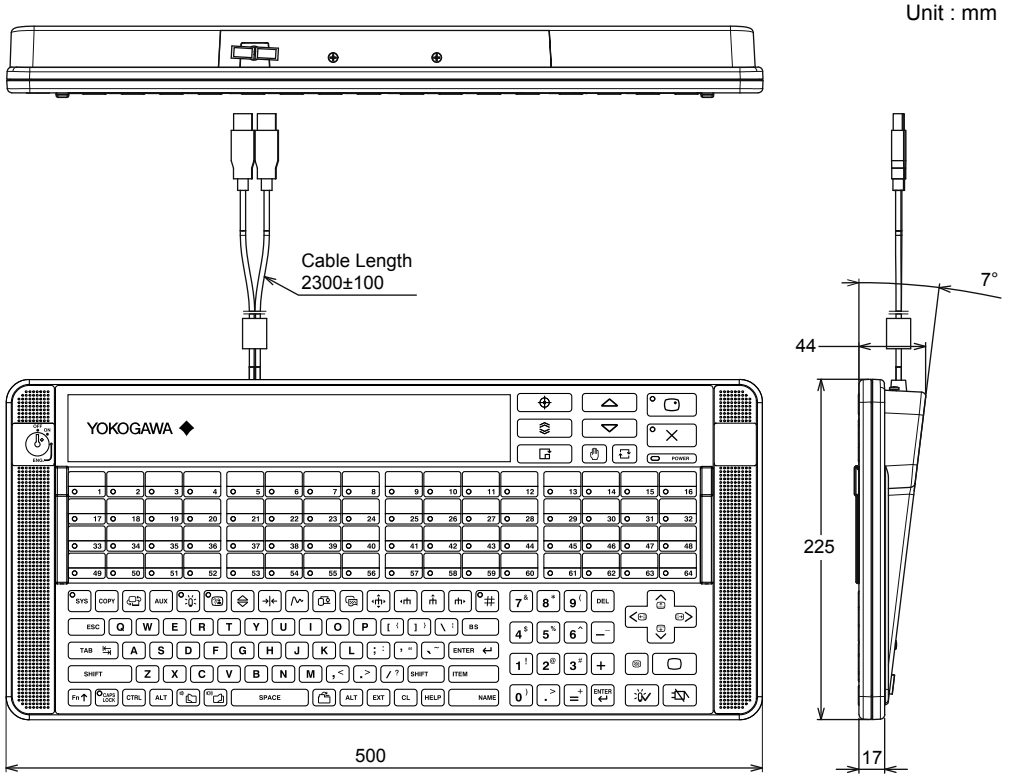

F02E.ai

■ DIMENSIONS OF VESA BRACKET ATTCHMENT

Unit : mm

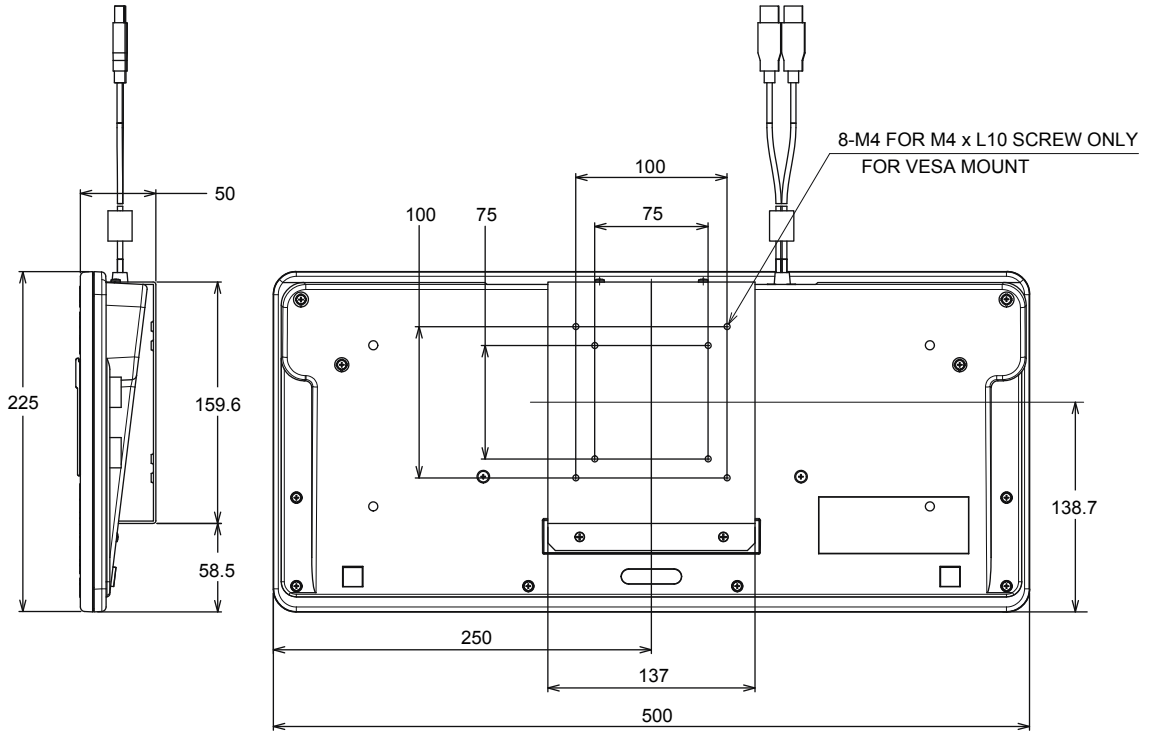

F03E.ai

All Rights Reserved. Copyright © 2012, Yokogawa Electric Corporation

■ MODEL AND SUFFIX CODES

		Description
Model	AIP830	Operation Keyboard for Single-loop Operation
Suffix Codes	-0	Without Mode selection switch
	-1	With Mode selection switch
	0	Operation confirmation key Type A
	1	Operation confirmation key Type B
	1	Always 1
Option Codes	/VESA	With VESA Bracket
	/EIM	With English Instruction Manual
	/JIM	With Japanese Instruction Manual

■ ORDERING INFORMATION

Specify the model and suffix codes.

■ TRADEMARKS

- CENTUM and Vnet/IP are registered trademark of Yokogawa Electric Corporation.
- Other company and product names appearing in this document are trademarks or registered trademarks of their respective holders.

All Rights Reserved. Copyright © 2012, Yokogawa Electric Corporation
Subject to change without notice.