FIELD INSTALLATION QUICK GUIDE

Installation Instructions

SM560-S-FD-1

Safety processor module

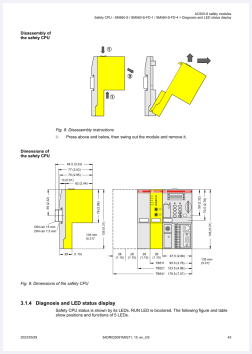

PRODUCT	SM560-S-FD-1
FAMILY	AC500-S
FUNCTION	Safety processor module
STATUS	Verify exact installed equipment

Prepared by Amikon Limited from ABB documentation. This guide supplements the complete manufacturer manual and site procedure.

01 CONFIRM THE ORDERED CONFIGURATION

Safety integrity level	SIL 3
Performance level	PL e
User program memory	1.3 MB
Integrated data memory	1 MB
Saved-data capacity	120 kB
Binary instruction time	0.05 us

02 PREPARATION AND CONNECTION

- Switch off all supply and process voltages; energized hot plug and hot swap are prohibited.
- Mount the safety CPU to the left of the non-safety CPU on their common terminal base.
- Insert the module below, then click it into place above as shown in the assembly drawing.
- Use the compatible safety firmware and project, then complete the required safety validation.

03 OFFICIAL INSTALLATION REFERENCE

Disassembly of the safety CPU

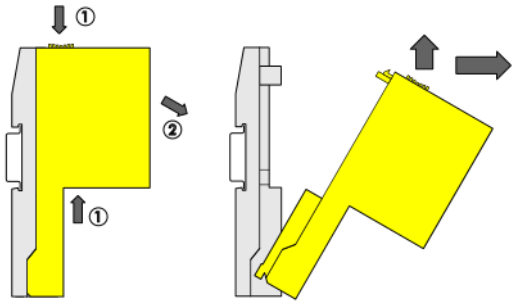

Fig. 8: Disassembly instructions

▷ Press above and below, then swing out the module and remove it.

Dimensions of the safety CPU

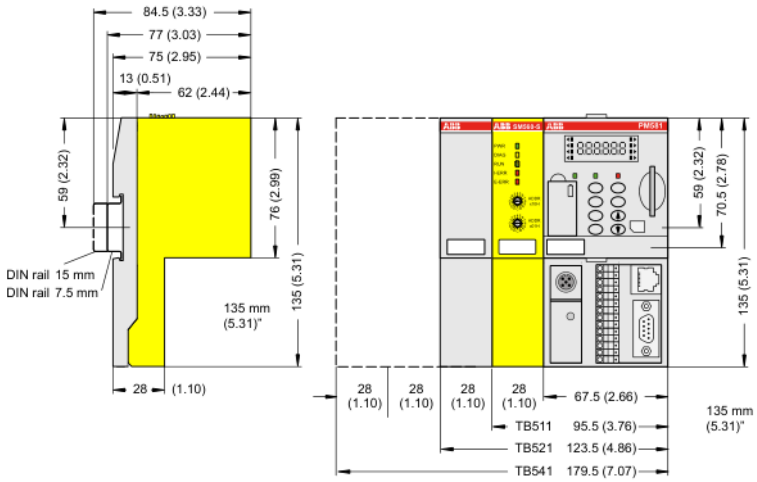

Fig. 9: Dimensions of the safety CPU

3.1.4 Diagnosis and LED status display

Safety CPU status is shown by its LEDs. RUN LED is bicolored. The following figure and table show positions and functions of 5 LEDs.

Official manufacturer page reproduced at its original aspect ratio.

04 COMMISSIONING CHECKS

01	Confirm the exact safety CPU variant.
02	Inspect the shared terminal-base relationship.
03	Verify that the module is latched at top and bottom.
04	Restore only the validated safety project.
05	Check diagnostics and the specified safe-state response.
06	Complete and record the safety acceptance test.

05 CONTROLLED DOCUMENT

Official source	ABB AC500-S Safety User Manual, pp.42-43
Product record	SM560-S-FD-1
Manufacturer	ABB
Warranty	12 months from AMIKON
Support	INFO@AMIKON.CN

AMIKON PRODUCT SUPPORT

+86-18020776786 INFO@AMIKON.CN **AMIKONG.COM**