MANUFACTURER DOCUMENT PACKAGE

Manufacturer's Manual

Reference package for procurement and maintenance review

OMRON

CP1W-TS002

FOUR-CHANNEL THERMOCOUPLE INPUT UNIT

Used with the applicable CP1W temperature sensor expansion configuration.

REFERENCE PACKAGE

OFFICIAL DOCUMENT

Selected official manufacturer pages follow this cover.

Source: OMRON W462 CP1L CPU Unit Operation Manual, Section 7-5, printed pages 473-479.

7-5 Temperature Sensor Units

7-5-1 CP1W-TS□01/TS□02 Temperature Sensor Units

CP1W-TS002/TS102 Temperature Sensor Units each provide up to four input points, and CP1W-TS001/TS101 Temperature Sensor Units each provide up to two input points. The inputs can be from thermocouples or platinum resistance thermometers.

CP1W-TS002/TS102 Temperature Sensor Units are each allocated four input words, so no more than three Units can be connected.

Part Names

Temperature Sensor Units:
CP1W-TS001/002/101/102

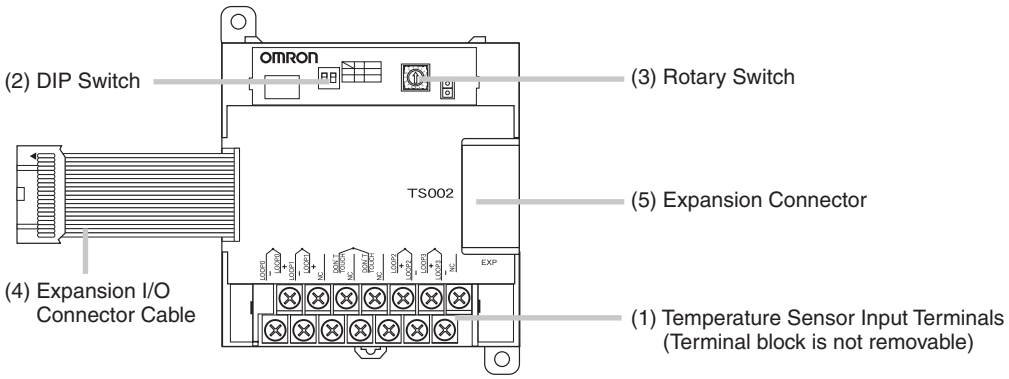

(1) Temperature Sensor Input Terminals
Used to connect temperature sensors such as thermocouples or platinum resistance thermometers.

(2) DIP Switch
Used to set the temperature unit (°C or °F) and the number of decimal places used.

(3) Rotary Switch
Used to set the temperature input range. Make the setting according to the specifications of the temperature sensors that are connected.

(4) Expansion I/O Connecting Cable
Connected to the expansion connector of a CP1L CPU Unit or a CP-series Expansion Unit or Expansion I/O Unit.The cable is included with the Temperature Sensor Unit and cannot be removed.

Note Do not touch the cables during operation. Static electricity may cause operating errors.

(5) Expansion Connector
Used for connecting CP-series Expansion Units or Expansion I/O Units.

Main Specifications

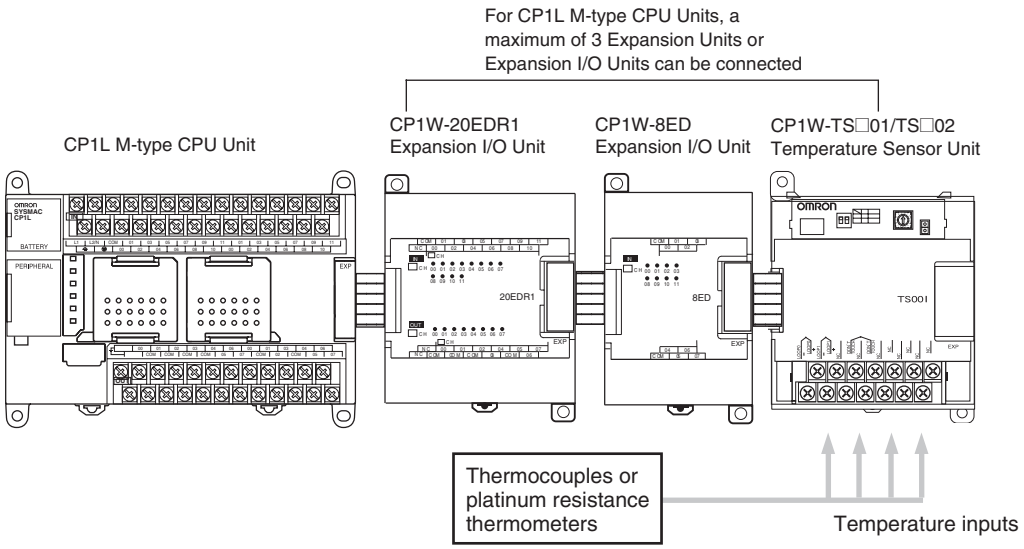

Item	CP1W-TS001	CP1W-TS002	CP1W-TS101	CP1W-TS102
Temperature sensors	Thermocouples		Platinum resistance thermometer	
	Switchable between K and J, but same type must be used for all inputs.		Switchable between Pt100 and JPt100, but same type must be used for all inputs.	
Number of inputs	2	4	2	4
Allocated input words	2	4	2	4
Accuracy	(The larger of ±0.5% of converted value or ±2°C) ±1 digit max. (See note.)		(The larger of ±0.5% of converted value or ±1°C) ±1 digit max.	
Conversion time	250 ms for 2 or 4 input points			
Converted temperature data	16-bit binary data (4-digit hexadecimal)			
Isolation	Photocouplers between all temperature input signals			
Current consumption	5 VDC: 40 mA max., 24 VDC: 59 mA max.		5 VDC: 54 mA max., 24 VDC: 73 mA max.	

Note Accuracy for a K-type sensor at −100°C or less is ±4°C ±1 digit max.

Using Temperature Sensor Units

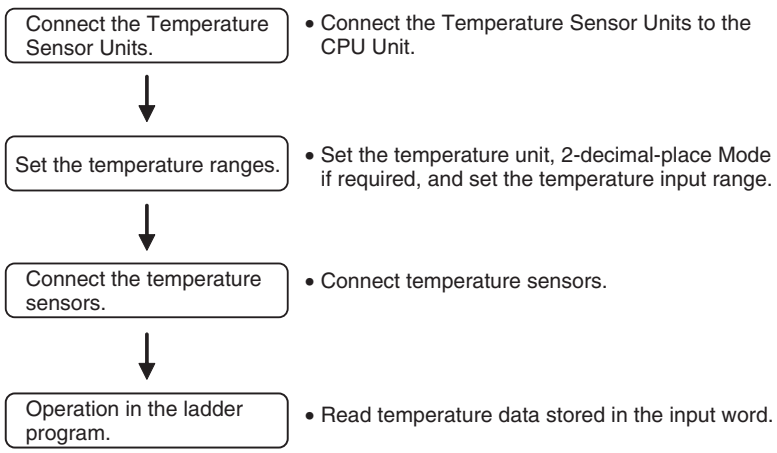

Connecting Temperature Sensor Units

For CP1L M-type CPU Units, a maximum of three CP1W-TS002 and CP1W-TS102 Temperature Sensor Units can be connected, because each unit is allocated four words. For CP1L L-type CPU Units, one Unit can be connected.

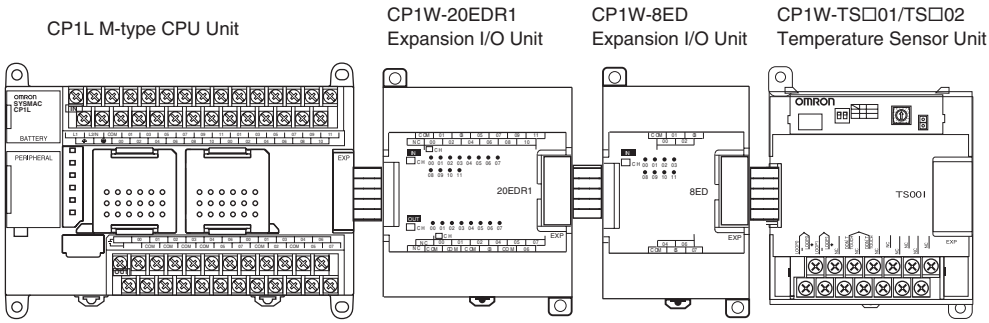

Setting Temperature Ranges

Note (1) Always turn OFF the power supply before setting the temperature range.

(2) Never touch the DIP switch or rotary switch during Temperature Sensor Unit operation. Static electricity may cause operating errors.

The Temperature Sensor Unit's DIP switch and rotary switch are used to set the temperature unit, to select 2-decimal-place Mode is to be used, and to set the temperature input range.

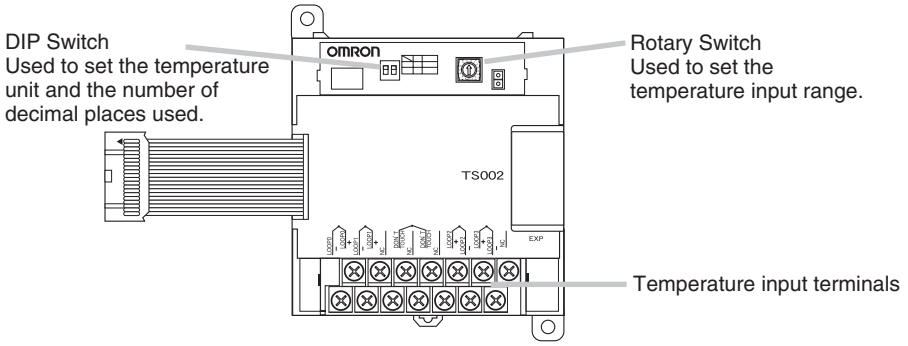

DIP Switch Settings

The DIP switch is used to set the temperature unit (°C or °F) and the number of decimal places used.

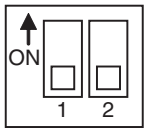

SW1	Setting		
1	Temperature unit	OFF	°C
		ON	°F
2	Number of decimal places used (See note.) (0.01 expression)	OFF	Normal (0 or 1 digit after the decimal point, depending on the input range)
		ON	2-decimal-place Mode

Note For details on 2-decimal-place Mode, refer to *Two-decimal-place Mode* on page 482.

Rotary Switch Setting

⚠ **Caution** Set the temperature range according to the type of temperature sensor connected to the Unit. Temperature data will not be converted correctly if the temperature range does not match the sensor.

⚠ **Caution** Do not set the temperature range to any values other than those for which temperature ranges are given in the following table. An incorrect setting may cause operating errors.

The rotary switch is used to set the temperature range.



Setting	CP1W-TS001/002			CP1W-TS101/102		
	Input type	Range (°C)	Range (°F)	Input type	Range (°C)	Range (°F)
0	K	–200 to 1,300	–300 to 2,300	Pt100	–200.0 to 650.0	–300.0 to 1,200.0
1		0.0 to 500.0	0.0 to 900.0	JPt100	–200.0 to 650.0	–300.0 to 1,200.0
2	J	–100 to 850	–100 to 1,500	---	Cannot be set.	
3		0.0 to 400.0	0.0 to 750.0	---		
4 to F	---	Cannot be set.		---		

Connecting Temperature Sensors

Thermocouples

CP1W-TS001

Either K or J thermocouples can be connected, but both thermocouples must be the same type and the same input range.

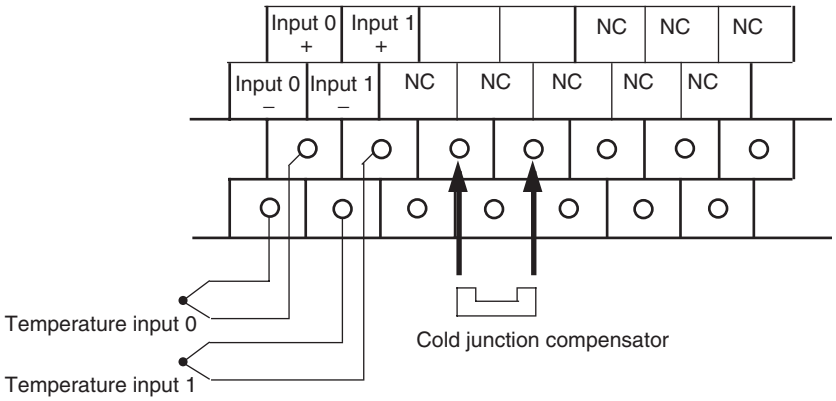

CP1W-TS002

Either K or J thermocouples can be connected, but all four thermocouples must be the same type and the same input range.

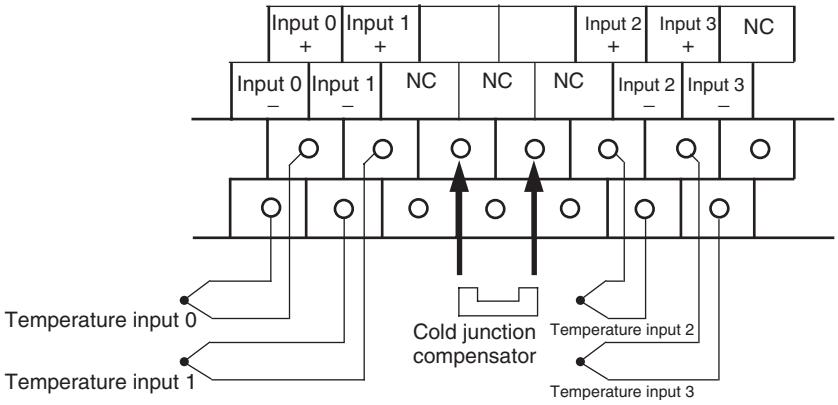

Note When connecting a thermocouple input, observe the following precautions:

- Do not remove the cold junction compensator attached at the time of delivery. If the cold junction compensator is removed, the Unit will not be able to measure temperatures correctly.
- Each of the input circuits is calibrated with the cold junction compensator attached to the Unit. If the Unit is used with the cold junction compensator from other Units, the Unit will not be able to measure temperatures correctly.
- Do not touch the cold junction compensator. Doing so may result in incorrect temperature measurement.

Platinum Resistance Thermometers

CP1W-TS101

One or two Pt or JPt platinum resistance thermometers can be connected, but both of the thermometers must be of the same type and the same input range must be used for each.

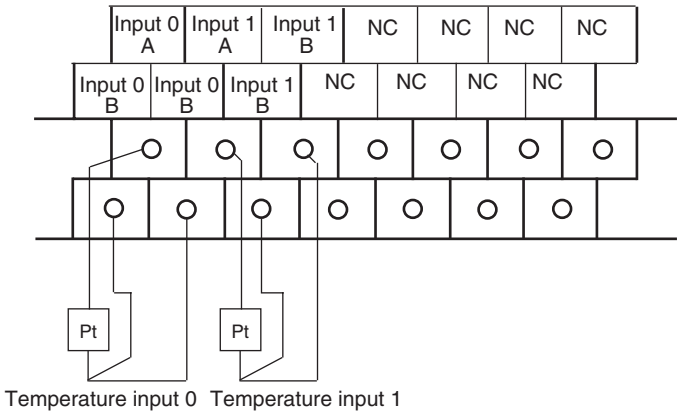

CP1W-TS102

Up to four Pt100 or JPt100 platinum resistance thermometers can be connected, but all four of the thermometers must be of the same type and the same input range must be used for each.

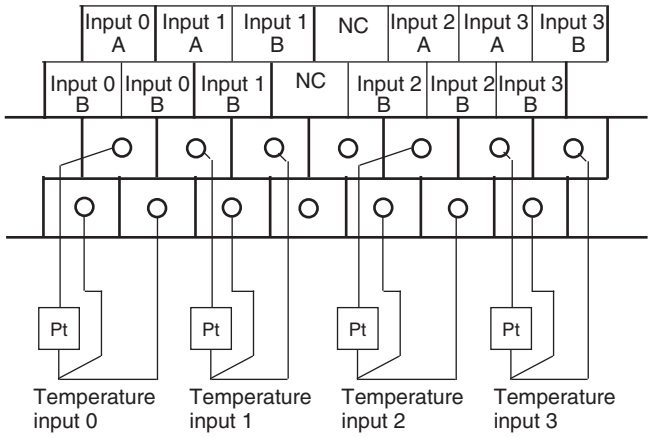

Note Do not connect anything to terminals not used for inputs.

Creating a Ladder Program

Word Allocations

Temperature Sensor Units are allocated words in the same way as other CP-series Expansion Units or Expansion I/O Units, in order of connection. A Temperature Sensor Unit is allocated the next input words following the input words of the CPU Unit or previous Expansion Unit or Expansion I/O Unit. Four input words are allocated to the 2-input CP1W-TS001 or CP1W-TS101 and four input words are allocated to the 4-input CP1W-TS002 or CP1W-TS102. No output words are allocated.

Example 1

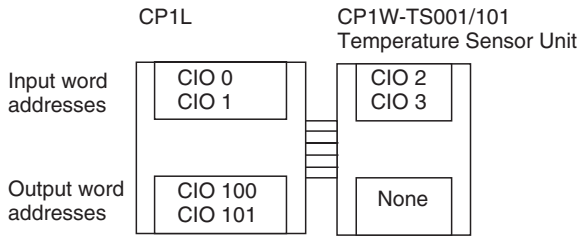

Example 2

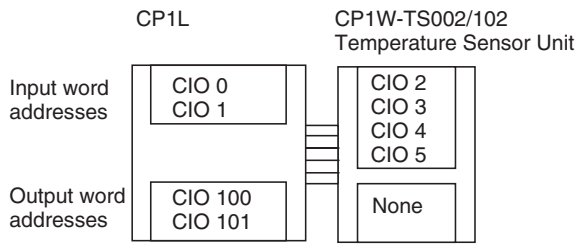

Converted Temperature Data

The temperature data will be stored in the input words allocated to the Temperature Sensor Unit in 4-digit hexadecimal.

TS002/TS102

m+1	Converted temperature data from input 0
m+2	Converted temperature data from input 1
m+3	Converted temperature data from input 2
m+4	Converted temperature data from input 3

TS001/TS101

m+1	Converted temperature data from input 0
m+2	Converted temperature data from input 1

"m" is the last input word allocated to the CPU Unit, Expansion I/O Unit, or Expansion Unit connected immediately before the Temperature Sensor Unit.

- Negative values are stored as 2's complements.
- Data for range codes that include one digit after the decimal point are stored without the decimal point, i.e., 10 times the actual value is stored.

Input		Data conversion examples
Unit: 1°C	K or J	850°C → 0352 hex −200°C → FF38 hex
Unit: 0.1°C	K, J, Pt100 or JPt100	×10 500.0°C → 5000 → 1388 hex −20.0°C → −200 → FF38 hex −200.0°C → −2000 → F830 hex

- If the input temperature exceeds the maximum or minimum value in the temperature input range that has been set by ±20°C or ±20°F, the displayed value will be held.
- If the circuit is disconnected, the open-circuit detection function will operate and the converted temperature data will be set to 7FFF.
- The open-circuit detection function will be automatically cleared and normal input temperature conversion will begin automatically when the input temperature returns to the convertible range.

Startup Operation

After power is turned ON, approximately 1 s is required for the first conversion data to be stored in the input word. During that period, the data will be 7FFE. Therefore, create a program as shown below, so that when operation begins simultaneously with startup it will wait for valid conversion data.

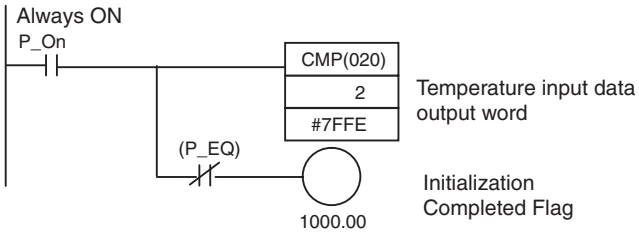

Handling Unit Errors

- CP-series Expansion Unit/Expansion I/O Unit errors are output to bits 0 to 6 of word A436. The bits are allocated from A436.00 in order starting from the Unit nearest the CPU Unit. CP1W-TS002 and CP1W-TS102 Temperature Sensor Units are allocated two bits each. Use these flags in the program when it is necessary to detect Expansion Unit/Expansion I/O Unit errors.
- When an error occurs, the Temperature Sensor Unit data becomes 7FFF hex (the same as for an open-circuit detection). With an open-circuit detection, it is not reflected in word A436.