MANUFACTURER DOCUMENT PACKAGE

Manufacturer's Manual

Reference package for procurement and maintenance review

OMRON

CP1L-M30DT-D

THIRTY-POINT SINKING TRANSISTOR CPU

Used with the applicable CP1L-M USB CPU configuration.

REFERENCE PACKAGE

OFFICIAL DOCUMENT

Selected official manufacturer pages follow this cover.

Source: OMRON W462 CP1L CPU Unit Operation Manual; DC power, mounting and 30-point I/O wiring sections.

Routing Wiring Ducts

Install the wiring ducts at least 20 mm between the tops of the PLC and any other objects, (e.g., ceiling, wiring ducts, structural supports, devices, etc.) to provide enough space for air circulation and replacement of Units.

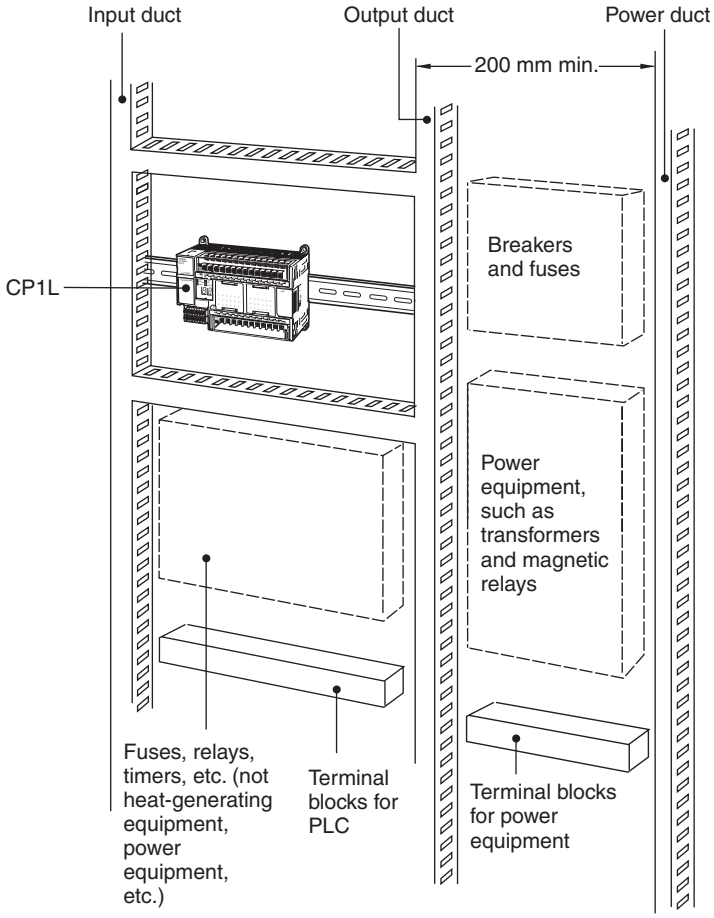

Dimensions

External Dimensions

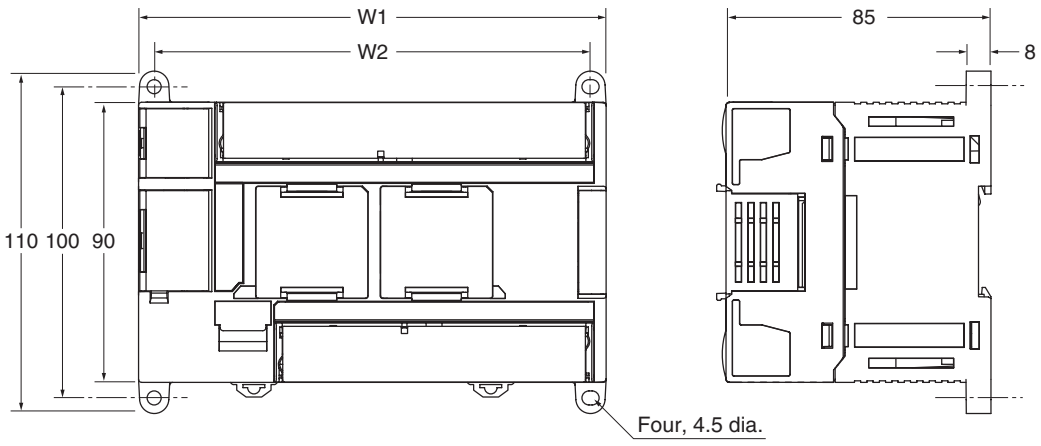

Model	W1	W2
CP1L-M60D□-□	195	185
CP1L-M40D□-□	150	140
CP1L-M30D□-□	130	120
CP1L-L20D□-□	86	76

Unit		A (mm)
CP1L CPU Unit	60 I/O points	185 ±0.5
	40 I/O points	140 ±0.5
	30 I/O points	120 ±0.5
	20 I/O points	76 ±0.5
	14 I/O points	76 ±0.5
	10 I/O points	56 ±0.5
Expansion I/O Unit	40 I/O points	140 ±0.2
	32 outputs	140 ±0.2
	20 I/O points	76 ±0.2
	16 outputs	76 ±0.2
	8 inputs	56 ±0.2
	8 outputs	56 ±0.2
Analog I/O Unit		76 ±0.2
Temperature Sensor Unit	TS004	140 ±0.2
	TS□01 TS□02 TS003	76 ±0.2
CompoBus/S I/O Link Unit		56 ±0.2

Space between Units When Expansion I/O Units Are Connected

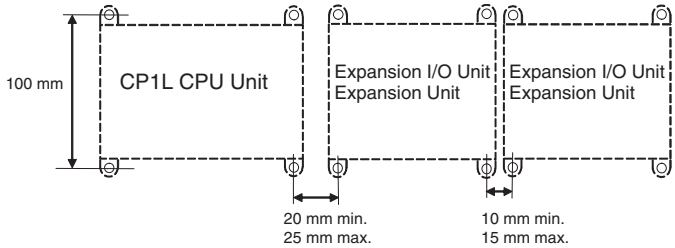

1,2,3... 1. Remove the cover from the CPU Unit's or the Expansion I/O Unit's expansion connector. Use a flat-blade screwdriver to remove the cover from the Expansion I/O Connector.

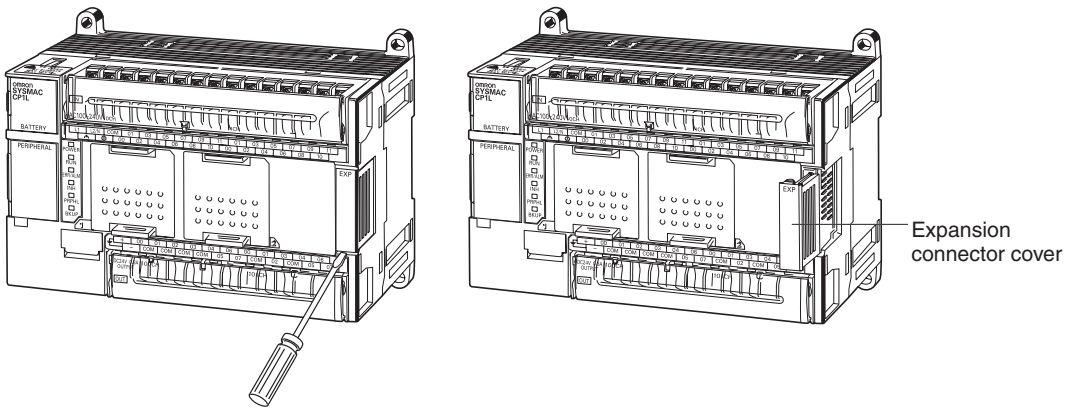

2. Insert the Expansion I/O Unit's connecting cable into the CPU Unit's or the Expansion I/O Unit's expansion connector.

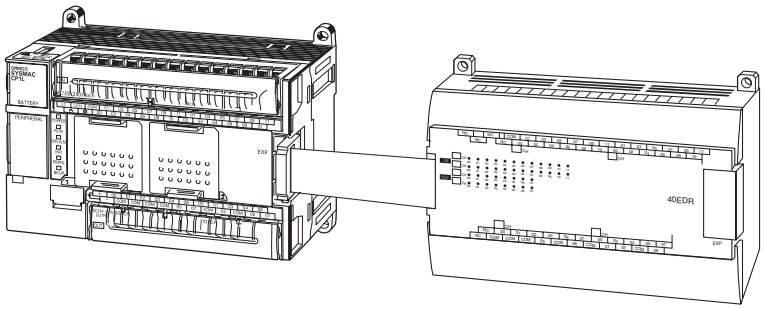

3. Replace the cover on the CPU Unit's or the Expansion I/O Unit's expansion connector.

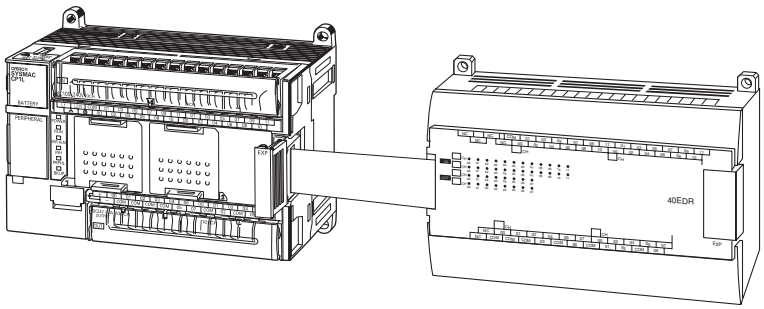

3-3-3 DIN Track Installation

1,2,3... 1. Use a screwdriver to pull down the DIN Track mounting pins from the back of the Units, and mount the Units to the DIN Track.

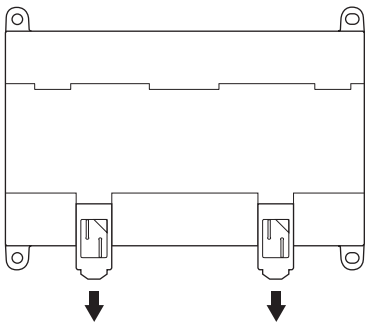

2. Lower the Units so that they catch on the top of the DIN Track, and then press them forward all the way to the DIN Track at the bottom.

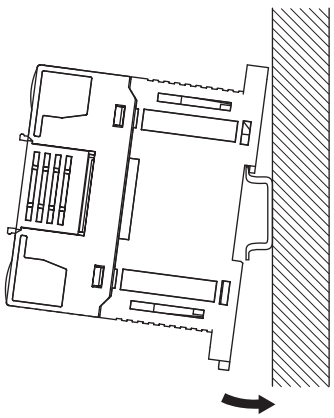

3. Press in all of the DIN Track mounting pins to securely lock the Units in place.

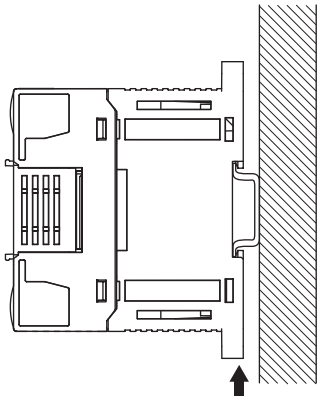

DIN Track

Mount the DIN Track in the control panel with screws in at least three places.

- DIN Track: PFP-50N (50 cm), PFP-100N (100 cm), or PFP-100N2 (100 cm)

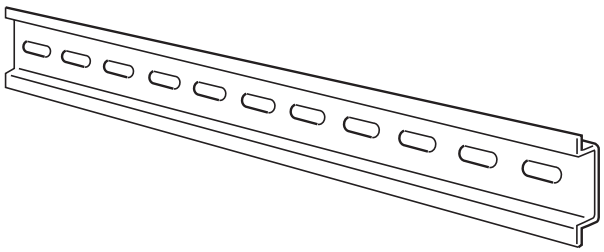

Secure the DIN Track to the control panel using M4 screws separated by 210 mm (6 holes). The tightening torque is 1.2 N·m.

PFP-100N2

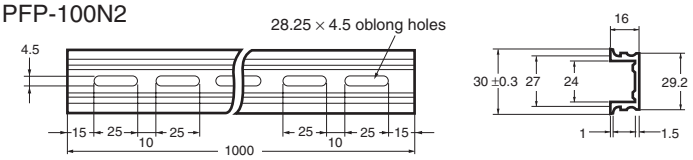

PFP-100N/50N

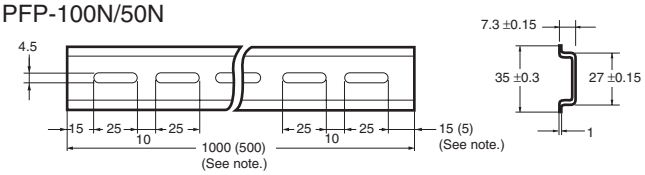

Note: PFP-50N dimensions are given in parentheses.

⚠ **Caution** Tighten the terminal block screws for the AC power supply to the torque of 0.5 N·m. Loose screws may result in fire or malfunction.

- Always ground the ground terminal to 100 Ω or less to protect against electric shock and incorrect operation from electrical noise.
- If one phase of the power supply is grounded, connect the grounded phase to the L2/N terminal.
- The GR terminal is a ground terminal. To prevent electrical shock, use a dedicated ground line (2 mm^2 min.) of 100 Ω or less.
- The line ground terminal (LG) is a noise-filtered neutral terminal. If noise is a significant source of errors or if electrical shocks are a problem, connect the line ground terminal (LG) to the ground terminal (GR) and ground both with a ground resistance of 100 Ω or less.
- To prevent electrical shock when short-circuiting between the LG and GR terminals, always use a ground of 100 Ω or less.
- Do not connect ground lines to other devices or to the frame of a building. Doing so will reverse the effectiveness of the ground and instead have a bad influence.

Isolating Transformer

The PLC's internal noise control is sufficient for the general noise to which power supply lines are subjected. Ground noise can be further reduced by providing the power supply through a 1:1 isolating transformer. Leave the isolating transformer's secondary side ungrounded.

CPU Units with DC Power Supply

DC Power Supply Wiring

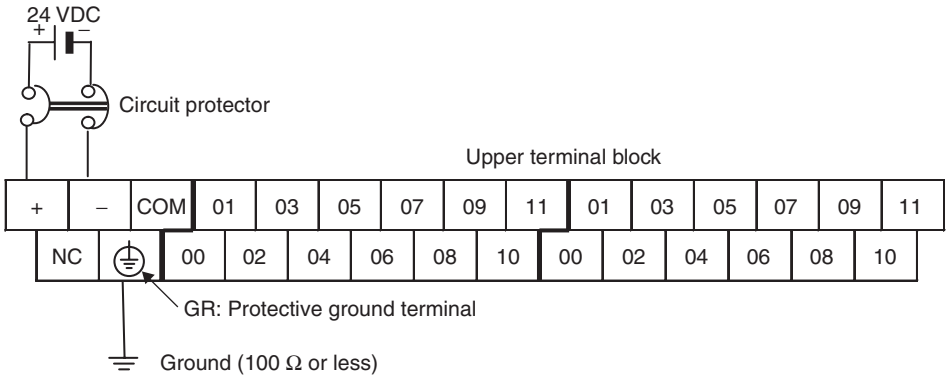

- Use crimp terminals or solid wire for wiring the power supply. Do not connect bare stranded wires directly to terminals.



- M3 self-rising terminal screws are used. Tighten the terminal screws to the torque of 0.5 N·m.
- To prevent noise, use a ground of 100 Ω or less.

DC Power Supply

- Provide a power supply of 20.4 to 26.4 VDC.
- The maximum current consumption is 20 W for CPU Units with 30, 40 or 60 I/O points and 13 W for CPU Units with 10, 14 or 20 I/O points.
- When the power supply is turned ON, the inrush current is approximately five times the normal current.

- The GR terminal is a ground terminal. To prevent electrical shock, use a dedicated ground line (2 mm^2 min.) of 100 Ω or less.

Note
(1) Never reverse the positive and negative leads when wiring the power supply terminals.
(2) Supply all power to the power supply terminals from the same source.

3-4-2 Wiring Built-in I/O

Wiring Precautions

Double-checking I/O Specifications

Double-check the specifications for the I/O Units. In particular, do not apply a voltage that exceeds the input voltage for Input Units or the maximum switching capacity for Output Units. Doing so may result in breakdown, damage, or fire.

When the power supply has positive and negative terminals, always wire them correctly.

Electric Wires

- AWG22 to AWG18 (0.32 to 0.82 mm^2) power lines are recommended. Use cable with a maximum diameter of 1.61 mm including the insulation covering.
- The current capacity of electric wire depends on factors such as the ambient temperature and insulation thickness, as well as the gauge of the conductor.
- M3 self-rising screws are used for all screw terminals including terminal screws for crimp terminal power supply wiring.
- Use crimp terminals or solid wire for wiring.
- Do not connect bare stranded wires directly to terminals.
- Tighten the terminal block screws to the torque of 0.5 N·m.
- Use crimp terminals (M3) having the dimensions shown below.

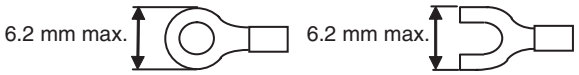

Wiring

- Wire the Units so that they can be easily replaced.
- Make sure that the I/O indicators are not covered by the wiring.
- Do not place the I/O wiring in the same conduits or ducts as high-voltage or power lines. Inductive noise can cause errors or damage.
- Tighten the terminal screws to the torque of 0.5 N·m.

Unit type	Terminal width	Terminal pitch
CPU Units	6.4 mm	7.6 mm
Expansion I/O Units 40ED□/32E□/20EDT□	6.4 mm	7.7 mm
Expansion I/O Units AD04□/DA0□□/MAD□□/TS□0□ SRT21/20EDR1/16E□/8E□	6.8 mm	8.4 mm

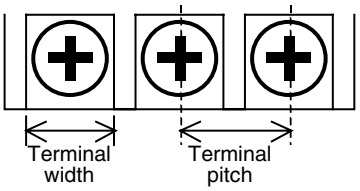

3-5-3 I/O Wiring for CPU Units with 30 I/O Points

Input Wiring (Upper Terminal Block, Removable)

The input circuits have 18 points/common. Use power lines with sufficient current capacity for the COM terminals.

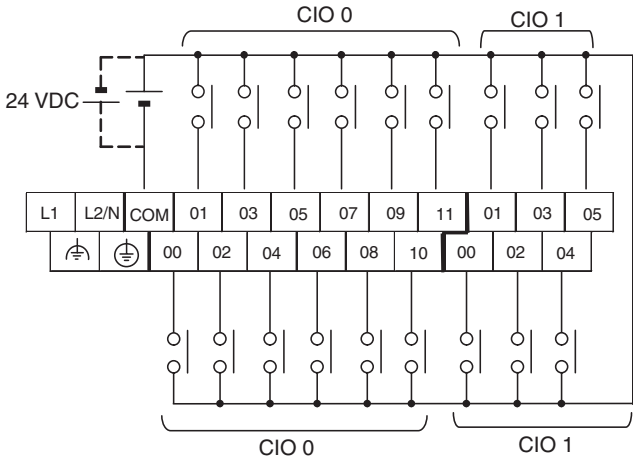

Output Wiring (Lower Terminal Block, Removable)

Relay Outputs (CP1L-M30DR-A and CP1L-M30DR-D)

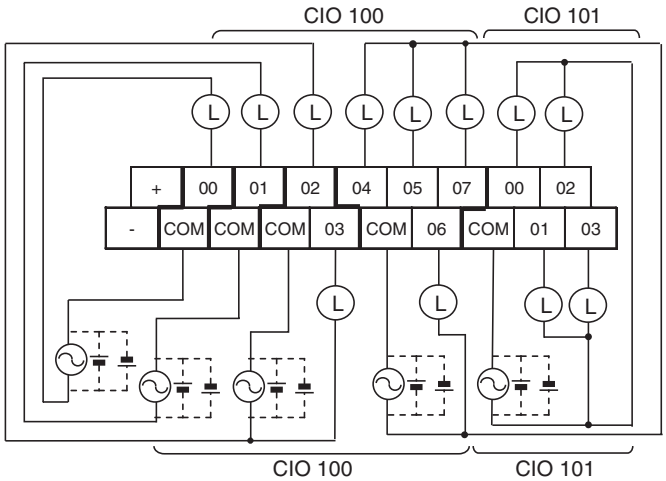

AC-power-supply models have a 24-VDC output terminals (+/−) on the lower terminal block. They can be used as a DC power supply for the input circuit.

Sinking Transistor Outputs (CP1L-M30DT-A and CP1L-M30DT-D)

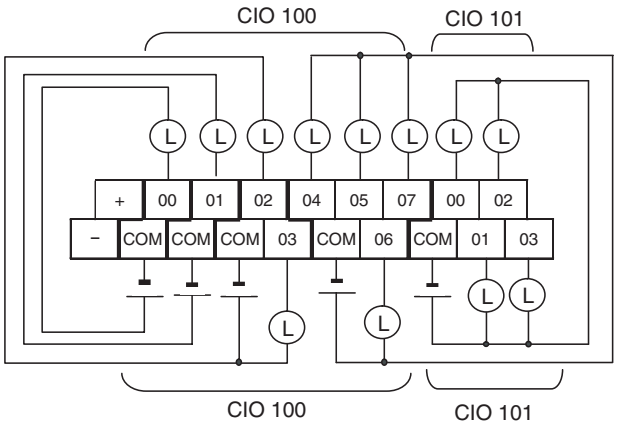

AC-power-supply models have a 24-VDC output terminals (+/–) on the lower terminal block. They can be used as a DC power supply for the input circuit.

Sourcing Transistor Outputs (CP1L-M30DT1-D)

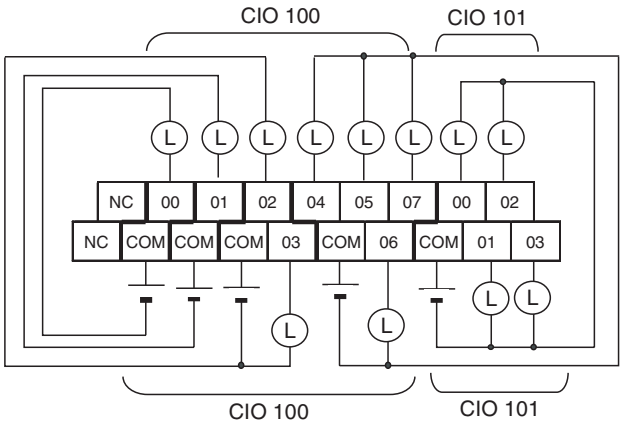

3-5-4 I/O Wiring for CPU Units with 20 I/O Points

Input Wiring (Upper Terminal Block, not Removable)

The input circuits have 12 points/common. Use power lines with sufficient current capacity for the COM terminals.

