MANUFACTURER DOCUMENT PACKAGE

Manufacturer's Manual

Reference package for procurement and maintenance review

BENTLY NEVADA

330903-00-11-10-02-CN

UNARMORED PROXIMITY SENSING PROBE

Used with the applicable 3300 XL NSv configuration.

REFERENCE PACKAGE

OFFICIAL DOCUMENT

Selected official manufacturer pages follow this cover.

Source: Bently Nevada 147385 Rev. R; approval guide 108M1756 Rev. AV.

3300 XL NSv Proximity Transducer System

Datasheet

Cordant™

147385 Rev. R

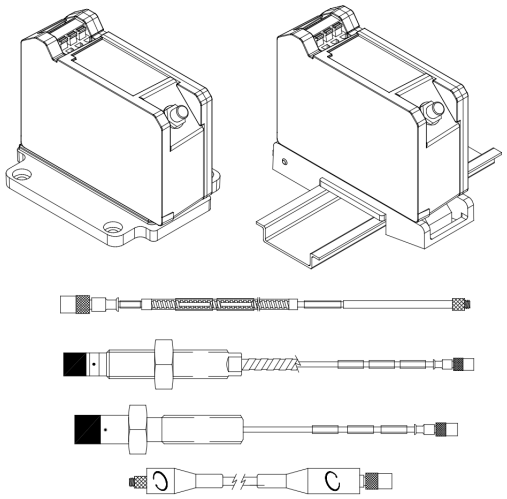

Description

The 3300 XL NSv Proximity Transducer system is intended for use with centrifugal air compressors, refrigeration compressors, process gas compressors, and other machines with tight installation requirements. The 3300 XL NSv Proximity Transducer System consists of:

- a 3300 NSv probe
- a 3300 NSv extension cable
- a 3300 XL NSv Proximitor Sensor(1)

The primary uses for the 3300 XL NSv Transducer System are for areas where counter bore, sideview, or rearview restrictions limit the use of standard Bently Nevada 3300 and 3300 XL 5 and 8 mm Transducer Systems. It is also ideal for small target applications, such as measuring radial vibration on shafts smaller than 51 mm (2 in) or axial position on flat targets smaller than 15 mm (0.6 in). It is primarily used in the following applications on fluid-filmed bearing machines where a small shaft or reduced side-view is present:

- Radial vibration and radial position measurements
- Axial (thrust) position measurements
- Tachometer and zero speed measurements
- Phase reference (Keyphasor signals)

The 3300 XL NSv Transducer System design allows it to replace both the 3300 RAM Transducer Systems and the 3000-series or 7000-series 190 Transducer System. Upgrades from the 3300 RAM system to the 3300 XL NSv system may use the existing probe, extension cable, and monitoring

Baker Hughes

system with 3300 XL NSv Proximitor Sensor. Upgrades from the 3000-series or 7000-series Transducer System must replace the probe, extension cable, and Proximitor Sensor with NSv components.

The 3300 XL NSv Transducer System has an Average Scale Factor of 7.87 V/mm (200 mV/mil), which is the most common output for eddy current transducers. Its enhanced side-view and small target characteristics give it a shorter linear range than the Bently Nevada 3300 XL-series 5 and 8 mm Transducer System. The 1.5 mm (60 mils) of linear range exceeds the linear range of the 3000-series 190 Transducer System.



Although the terminals and connector on the Proximitor Sensor have protection against electrostatic discharge, take reasonable precautions to avoid electrostatic discharge during handling.

Proximitor Sensor

The 3300 XL NSv Proximitor Sensor has similar features to those found in the 3300 XL 8 mm Proximitor Sensor. Its thin design allows the user to mount it in either a high-density DIN-rail installation or a more traditional panel mount configuration. Improved RFI/EMI immunity allows the 3300 XL NSv Proximitor Sensor to achieve European CE mark approvals without any special mounting considerations. This RFI immunity also prevents nearby high frequency radio signals from adversely affecting the transducer system. SpringLoc terminal strips on the Proximitor Sensor require no special installation tools and facilitate faster, highly robust field wiring connections.

Proximity Probe and Extension Cable

The 3300 NSv probe and extension cable are mechanically and electrically compatible and interchangeable with Bently Nevada's previous 3300 RAM proximity probe and extension cable. The NSv probe has increased chemical resistance compared to the 3300 RAM probe, which allows its use in many process compressor applications. The side-view characteristics of the 3300 NSv probe are also superior to those of the 3000-series 190 probe when gapping the 3300 NSv probe at the same distance from the probe target.

The 3300 NSv probe comes in varying probe case configurations, including armored and unarmored 1/4-28, 3/8-24, M8X1 and M10X1 probe threads. The reverse mount 3300 NSv probe comes standard with either 3/8-24 or M10X1 threads. All components of the transducer system have gold-plated brass ClickLoc connectors. ClickLoc connectors lock into place and prevent the connection from loosening. The patented TipLoc molding method provides a robust bond between the probe tip and the probe body. Bently Nevada's patented CableLoc design provides 220 N (50 lb) of pull strength and securely attaches the probe cable to the probe tip. Connector protectors are recommended for use on the probe-to-extension cable connection, as well as on the cable-to-Proximitor Sensor connection. Connector protectors prevent most liquids from entering into the ClickLoc connectors and adversely affecting the electrical signal(2).

Notes:

(1) Proximitor Sensors are supplied by default from the factory calibrated to AISI 4140 steel. Calibration to other target materials is available upon request.

(2) Silicone tape is also provided with each 3300 NSv extension cable and can be used instead of connector protectors. Silicone tape is not recommended in applications where the probe-to-extension cable connection will be exposed to turbine oil.

Specifications

Unless otherwise noted, the following specifications are for a 3300 XL NSv Proximitor Sensor, extension cable and probe between 0°C and +45°C (+32°F to +113°F) at a maximum altitude of 2000 m, with a -24 Vdc power supply, a 10 kΩ load, a Bently Nevada supplied AISI 4140 steel target that is 31 mm (1.2 in) diameter or larger, and a probe gap of 1.0 mm (40 mils). The system accuracy and interchangeability specifications do not apply when using a transducer system calibrated to any target other than a Bently Nevada AISI 4140 steel target.

Electrical

Proximitor Sensor Input	Accepts one non-contacting 3300 RAM or 3300 NSv Proximity Probe and Extension Cable.
Power	Requires -17.5 Vdc to -26 Vdc without barriers at 12 mA maximum consumption, -23 Vdc to -26 Vdc with barriers. Operation at a more positive voltage than -23.5 Vdc can result in reduced linear range.
Supply Sensitivity	Less than 2 mV change in output voltage per volt change in input voltage.
Output resistance	50 Ω
Probe dc Resistance	
Probe Length (m)	Resistance from the Center Conductor to the Outer Conductor (R_{PROBE}) (ohms)
0.5	4.0 ± 0.5
1.0	4.2 ± 0.5
5.0	5.3 ± 0.7
7.0	5.9 ± 0.9
Extension cable dc resistance	Center conductor: 0.220 Ω/m (0.067 Ω/ft) Shield: 0.066 Ω/m (0.020 Ω/ft)
Extension cable capacitance	69.9 pF/m (21.3 pF/ft) typical
Field Wiring	0.2 to 1.5 mm² (16 to 24 AWG)[0.25 to 0.75 mm² (18 to 23 AWG) with ferrules]. Recommend using three-conductor shielded triad cable. Maximum length of 305 meters (1,000 feet) between the 3300 XL NSv Proximitor Sensor and the monitor. See the frequency response graphs Figure 16 and Figure 17 for signal rolloff at high frequencies when using longer field wiring lengths.
Linear Range	1.5 mm (60 mils). Linear range begins at approximately 0.25 mm (10 mils) from target and is from 0.25 to 1.75 mm (10 to 70 mils) (approximately -1 to -13 Vdc).
Recommended Gap Setting	1.0 mm (40 mils)
System performance over ambient temperature range (0°C to 45°C)	
Incremental Scale Factor (ISF)	7.87 V/mm (200 mV/mil) +12.5%/-20% including interchangeability error when measured in increments of 0.25 mm (10 mils) over the 1.5 mm (60 mil) linear range.
Deviation from best fit straight line (DSL)	Less than ±0.06 mm (±2.3 mils).

Frequency Response	0 to 10 kHz: +0, -3 dB typical, with up to 305 meters (1000 feet) of field wiring.
Target Size (flat target)	Minimum: 8.9 mm (0.35 in) diameter Recommended minimum: 13 mm (0.5 in) diameter Axial position measurements on shaft diameters smaller than 13 mm (0.5 in) will generally result in a change in scale factor. Reducing the gap between the probe and target will help limit the change in scale factor. See Figure 12 for additional information.

Shaft Diameter	Minimum (standard X-Y probe configuration): 30 mm (1.2 in) Minimum (X-Y proximity probes offset axially by 23 mm [0.9 in]): 20 mm (0.8 in) Measurements on shaft diameters smaller than 30 mm (1.2 in) usually require close spacing of radial vibration or axial position transducers. This creates the potential for their electromagnetic emitted fields to interact with one another (cross-talk), resulting in erroneous readings. To prevent cross-talk, maintain minimum separation of transducer tips of at least 25 mm (1.0 in) for axial position measurements or 23 mm (0.9 in) for radial vibration measurements. See Figure 14: Probe Cross-talk with Probes Mounted in Parallel and Figure 15: Probe Cross-talk with Probes Mounted in X-Y Configuration. Radial vibration or radial position measurements on shaft diameters smaller than 20 mm (0.8 in) will generally result in greater than a 10% change in Average Scale Factor (ASF). See Figure 13 for additional information.

Counterbore	Minimum: 9.5 mm (0.375 in) Recommended minimum: 13 mm (0.5 in) Counterbores smaller than 13 mm (0.5 in) generally result in a change in scale factor at far gaps. Reducing the gap between the probe and the target will allow the transducer system to maintain its Average Scale Factor (ASF) over a reduced linear range. See Figure 9 for additional information.

Effects of 60 Hz Magnetic Fields Up to 300 Gauss (5 meter system)			
Output voltage in mil pp/gauss			
Gap	Proximitor Sensor	Probe	Ext. Cable
0.25 mm (10 mils)	0.006	0.001	0.001
1.0 mm (40 mils)	0.007	0.002	0.001
1.75 mm (70 mils)	0.008	0.002	0.003

Mechanical

Probe Tip Material	Polyphenylene sulfide (PPS).
Probe Case Material	AISI 304 stainless steel (SST).
Probe Cable Specifications	75 Ω coaxial, fluoroethylene propylene (FEP) insulated probe cable in the following total probe lengths: 0.5, 1, 5, or 7 meters.
Extension Cable Material	75 Ω coaxial, fluoroethylene propylene (FEP) insulated.
Proximitor Sensor Material	A380 aluminum
System Length	5 or 7 meters including extension cable
Extension Cable Armor (optional)	Flexible AISI 302 SST with/without FEP outer jacket.
Tensile Strength (maximum rated)	220 N (50 lb) probe case to probe lead. 220 N (50 lb) at probe lead to extension cable connectors. 220 N (50 lb) probe case to stainless steel armor.
Connector material	Gold-plated brass

Connector-to-connector Torque		
Probe Case Torque	**Maximum Rated**	**Recommended**
1/4-28 or M8X1 probe cases	7.3 N•m (65 in•lb)	5.1 N•m (45 in•lb)
3/8-24 or M10X1 probe cases	33.9 N•m (300 in•lb)	11.3 N•m (100 in•lb)
3/8-24 or M10X1 probe cases – first three threads	22.6 N•m (200 in•lb)	7.5 N•m (66 in•lb)
Reverse mount probes	22.6 N•m (200 in•lb)	7.5 N•m (66 in•lb)

Recommended torque	Finger tight
Maximum torque	0.56 N•m (5 in•lb)

Minimum Bend Radius (with or without sst armor)	25.4 mm (1.0 in)
System Weight (typical)	
Probe	Approximately 14 to 150 g (0.5 to 5.3 oz)
Extension Cable	45 g/m (0.5 oz/ft)
Armored Extension Cable	64 g/m (0.7 oz/ft)
Proximitor Sensor	255 g (9 oz)

Thread Engagement Limits

Probe Case Thread	Maximum Length of Thread Engagement
1/4-28	0.375 in
3/8-24	0.563 in
M8x1	12 mm
M10x1	15 mm

Maximum thread engagement lengths are per the industry standard of 1.5 times the nominal thread diameter. A fit class matching that of the external probe thread is assumed for all internal threads. Applications with thread engagement lengths exceeding the values in the table above may exhibit binding during installation. Contact your Bently Nevada representative if you require probe thread engagement lengths exceeding the values above. Bently Nevada does not replace proximity probes under warranty due to excessive thread engagement lengths.

When drilling and tapping a mounting hole **for a 1/4-28 probe**, a **#3 or larger tap drill** is recommended.

Environmental Limits

Probe Temperature Range	
Operating Temperature	-52°C to +177°C (-62°F to +351°F)
Storage Temperature	-52°C to +177°C (-62°F to +351°F) Exposing the probe to temperatures below -34°C (-30°F) for a sustained period of time may cause premature failure of the pressure seal.
Extension Cable Temperature Range	
Operating and Storage Temperature	-52°C to +177°C (-62°F to +351°F)
Proximitor Sensor Temperature Range	
Operating Temperature	-52°C to +100°C (-62°F to +212°F)
Storage Temperature	-52°C to +105°C (-62°F to +221°F)
Relative Humidity	100% condensing, non-submersible when connectors are protected.Tested to IEC 68-2-3 damp heat.

Hazardous Area Approvals

For the detailed listing of country and product-specific approvals, refer to the *Approvals Quick Reference Guide (108M1756)*.

For additional technical documentation, please log in to bntechsupport.com and access the Bently Nevada Media Library.

cNRTLus

3300 XL Proximitor Sensor

ia When installed with intrinsically safe zener barriers per drawing 141092 or when installed with galvanic isolators.	Class I, Zone 0: AEx/Ex ia IIC T4/T5 Ga; Class I, Groups A, B, C, and D, Class II, Groups E, F and G, Class III; T5 @ Ta= -55°C to + 40°C. T4 @ Ta= -55°C to + 80°C.
nA, ec When installed with non-incendive circuit connected per drawing 140979.	Class I, Zone 2: AEx/Ex nA IIC T4/T5 Gc; Class I, Division 2, Groups A, B, C, and D; Class I, Zone 2: AEx/Ex ec IIC T4/T5 Gc; Class I, Division 2, Groups A, B, C, and D; T5 @ Ta= -55°C to + 40°C T4 @ Ta= -55°C to + 80°C

3300 XL Probe

ia When installed with intrinsically safe zener barriers per drawing 141092 or when installed with galvanic isolators.	Class I, Zone 0: AEx/Ex ia IIC T5...T1 Ga; Class 1, Groups A, B. C, and D, Class II, Groups E, F, and G, Class III; (see Temperature Schedule table to follow)
nA, ec When installed with non-incendive circuit connected per drawing 140979.	Class I, Zone 2: AEx/Ex nA IIC T5...T1 Gc; Class 1, Division 2, Groups A, B, C, D; Class 1, Zone 2: AEx/Ex ec IIC T5...T1 Gc; Class I, Division 2, Groups A, B, C, and D; (see Temperature Schedule table to follow)

ATEX/IECEx

3300 XL Proximitor Sensor

ia	II 1 G Ex ia IIC T4/T5 Ga Ex ia IIIC T90C/T105C Dc For EPL Dc: T105C @ Ta = -55°C to 100°C T90C @ Ta = -55°C to +85°C Ui= -28V / Uo= -28V Ii= 140mA / Io= 140mA Pi= 0.91W / Po= 0.742W Ci- 47nF / Co= 1.5nF Li= 1460µH / Lo= 610µH
nA,ec	II 3 G Ex nA IIC T4/T5 Gc Ex ec IIC T4/T5 Gc Ui= -28V / Ii= 140 mA T5 @ Ta= -55˚C to + 40˚C T4 @ Ta= -55 ˚C to + 80˚C

3300 XL Probe

Probe entity parameters are met when used with BN extension cables and connected to BN Prox.

<table>
<tr><td>ia</td><td>II 1 G
Ex ia IIC T5...T1 Ga,
(see Temperature Schedule table to follow)
Ex ia IIIC T90°C ... T280°C Dc
For EPL Dc:<table><tr><td>Ui= -28V</td><td>Ci = 1.5 nF</td></tr><tr><td>Ii = 140 mA</td><td>Li =610 µH</td></tr><tr><td>Pi = 0.91 W</td><td></td></tr></table></td></tr>
<tr><td>nA,ec</td><td>II 3 G
Ex nA IIC T5...T1 Gc,
Ex ec IIC T5...T1 Gc,
(see Temperature Schedule table to follow)<table><tr><td>Ui= -28V</td><td>Ii= 140 mA</td></tr></table></td></tr>
</table>

Temperature Schedule

Temperature Classification	Ambient Temperature (Probe Only)
For EPL Ga and Gc	
T1	-55°C to +232°C
T2	-55°C to +177°C
T3	-55°C to +120°C
T4	-55°C to +80°C
T5	-55°C to +40°C
For EPL Dc	
T280°C @ Ta	-55°C to +232°C
T225°C @ Ta	-55°C to +177°C
T170°C @ Ta	-55C to +120°C
T130°C @ Ta	-55°C to +80°C
T105°C @ Ta	-55°C to +100°C
T90°C @ Ta	-55°C to +40°C

Hazardous Area Conditions of Safe Use

cNRTLus:

ia

Install per Bently Nevada drawing 141092.

nA, ec

Install per Bently Nevada drawing 140979.

ATEX/IECEx:

ia

Install per Bently Nevada drawing 141092.

nA, ec

The Proximitor must be installed so as to provide the terminals with a degree of protection of at least IP54.

Ordering Information

For the detailed listing of country and product-specific approvals, refer to the *Approvals Quick Reference Guide (108M1756)*.

For additional technical documentation, please log in to bntechsupport.com and access the Bently Nevada Media Library.

3300 NSv Proximity Probes

330901 3300 NSv Probe, 1/4-28 UNF thread, without armor
330902 3300 NSv Probe, 1/4-28 UNF thread, with armor
330908 3300 NSv Probe, 3/8-24 UNF thread, without armor
330909 3300 NSv Probe, 3/8-24 UNF thread, with armor
Part Number-AA-BB-CC-DD-EE
A: Unthreaded Length Option

	Unthreaded length must be at least 0.7 inch less than the case length. Order in increments of 0.1 in Length configurations: Maximum unthreaded length: 9.2 in Minimum unthreaded length: 0.0 in Example: **04** = 0.4 in

B: Overall Case Length Option

	Order in increments of 0.1 in Threaded length configurations: Maximum case length: 9.9 in Minimum case length: 0.8 in Example: **2 4** = 2.4 in

C: Total Length Option	
05	0.5 meter (20 in)
10	1.0 meter (39 in)
50	5.0 meters (16.4 feet)
70	7.0 meters (23.0 feet)
D: Connector and Cable-Type Option	
01	Miniature coaxial ClickLoc connector with connector protector, standard cable
02	Miniature coaxial ClickLoc connector, standard cable
11	Miniature coaxial ClickLoc connector with connector protector, FluidLoc cable
12	Miniature coaxial ClickLoc connector, FluidLoc cable
E: Agency Approval Option	
00	Not required
05	Multiple Approvals

3300 NSv Proximity Probes, Metric

330903 3300 NSv Probe, M8X1 thread, without armor
330904 3300 NSv Probe, M8X1 thread, with armor
330905 3300 NSv Probe, M10X1 thread, without armor

330910 3300 NSv Probe, M10X1 thread, with armor	
Part Number-AA-BB-CC-DD-EE	
A: Unthreaded Length Option	
	Unthreaded length must be at least 20 mm less than the case length. Order in increments of 10 mm. Length configuration: Maximum unthreaded length: 230 mm Minimum unthreaded length: 0 mm Example: **06** = 60 mm
B: Overall Case Length Option	
	Order in increments of 10 mm. Metric thread configurations: Maximum length: 250 mm Minimum length: 20 mm Example: **06** = 60 mm
C: Total Length Option	
05	0.5 meter (20 in)
10	1.0 meter (39 in)
50	5.0 meters (16.4 feet)
70	7.0 meters (23.0 feet)
D: Connector and Cable-Type Option	
01	Miniature coaxial ClickLoc connector with connector protector, standard cable
02	Miniature coaxial ClickLoc connector, standard cable
11	Miniature coaxial ClickLoc connector with connector protector, FluidLoc cable
12	Miniature coaxial ClickLoc connector, FluidLoc cable
E: Agency Approval Option	
00	Not required
05	Multiple Approvals

3300 NSv Reverse Mount Probe

330906-02-12-CC-DD-EE 3/8-24 UNF threads	
330907-05-30- CC-DD-EE M10X1 threads	
C: Total Length Option	
05	0.5 meter (20 in)
10	1.0 meter (39 in)
50	5.0 meters (16.4 feet)
70	7.0 meters (23.0 feet)
D: Connector Option	
02	Miniature coaxial ClickLoc connector, standard cable
12	Miniature coaxial ClickLoc connector, FluidLoc cable
E: Agency Approval Option	
00	Not required

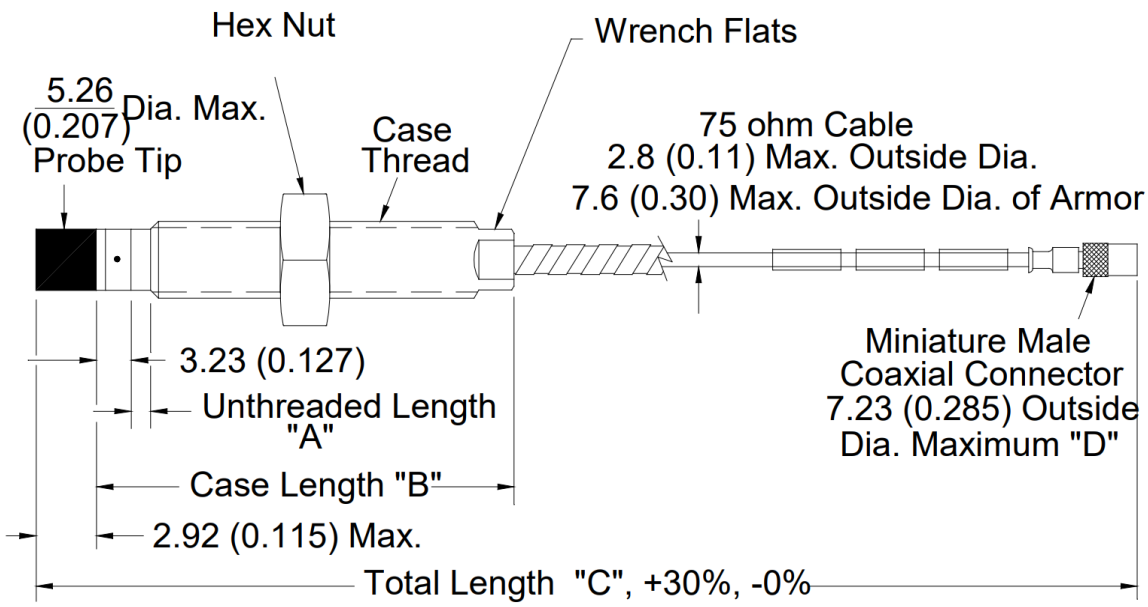

Figure 18: 3300 NSv Proximity probes, Standard Mount

330901, 1/4-28 UNF-2A, without armor

330902, 1/4-28 UNF-2A, with armor

330903, M8X1 thread, without armor

330904, M8X1 thread, with armor

330905, M10X1 thread, without armor

330908, 3/8-24 UNF-2A, without armor

330909, 3/8-24 UNF-2A, with armor

330910, M10X1 thread, with armor

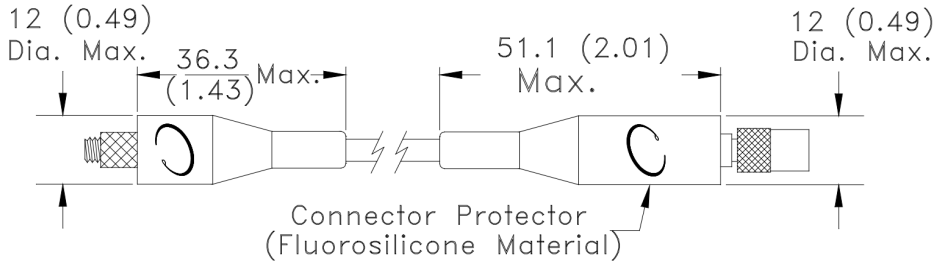

Note: Connector Protector only installed on female end when optioned. Both ends available as accessories.

Figure 19: Installed Connector Protectors

-00 approval option (No Approvals)

The '-00' approvals option is designated for Safe Area applications. When a product carries the label 'No Approvals,' it indicates that the product is not intended for installation in a hazardous area. Presently, the '-00' option encompasses a majority of the required markings and is generally suitable for global ordering. Noteworthy exceptions include countries necessitating additional RoHS, EMC, RF, or metrology information (e.g., China, Korea, CIS countries, etc.). Additionally, space constraints on certain products, such as Velomitors and Accelerometers, may mandate the creation of multiple approval options.
For products **without RADIO capabilities**, the -00 option is applicable in the following countries and regions:

North America	South America	Central America	European Union							
Afghanistan	Algeria	Albania	Angola	Australia	Bahrain	Bangladesh	Belize	Benin	Bhutan	Bosnia-Herzegovina
Botswana	Brunei	Burkina Faso	Burundi	Cabo Verde	Cambodia	Cameroon	Central African Republic	Chad	Chile	China
Comoros	Democratic Republic of the Congo	Republic of the Congo	Cote d'Ivoire	Djibouti	Dominica	East Timor	Egypt	Equatorial Guinea	Eritrea	Estonia
Eswatini	Ethiopia	Fiji	Gabon	The Gambia	Georgia	Ghana	Grenada	Guinea	Guinea-Bissau	Guyana
Iceland	India	Indonesia	Iran	Iraq	Israel	Japan	Jordan	Kenya	Kirabati	South Korea
Kosovo	Kuwait	Laos	Latvia	Lebanon	Lesotho	Liberia	Libya	Liechtenstein	Lithuania	Madagascar
Malawi	Malaysia	Maldives	Mali	Malta	Marshall Islands	Mauritania	Mauritius	Federated States of Micronesia	Moldova	Monaco
Mongolia	Montenegro	Mozambique	Myanmar	Namibia	Nauru	Nepal	New Zealand	Niger	Nigeria	North Macedonia
Norway	Oman	Pakistan	Palau	Papua New Guinea	Philippines	Qatar	Rwanda	Saint Kitts and Nevis	Saint Lucia	Saint Vincent and the Grenadines
Samoa	San Marino	Sao Tome and Principe	Saudi Arabia	Senegal	Serbia	Seychelles	Sierra Leone	Singapore	Solomon Islands	Somalia
South Africa	Sri Lanka	Sudan	South Sudan	Suriname	Syria	Switzerland	Taiwan	Tanzania	Thailand	Togo
Tonga	Trinidad and Tobago	Tunisia	Turkey	Tuvalu	United Kingdom	Uganda	Vanuatu	Vatican City	Vietnam	Yemen
Zimbabwe	Zambia									

To determine the precise country-specific Safe Area options available, please refer to the specific product part number provided in the tables below.
For products with RADIO capabilities refer to the Country Specific Approvals section for comprehensive details on available ordering options or locate the relevant product number within this document.

In the case of Mexico, the -00 option is applicable for orders destined for a safe area, except for Power Supplies like the 3500/15. For Power Supplies, irrespective of whether they will be used in a safe area, an approval option suitable for North America hazardous areas must be chosen in accordance with NOM requirements.

-02, -05 approval option (Multi-Approvals)

Multi-Approvals options, typically denoted as -02, or -05, combine North America and EU (ATEX) / International (IECEx) Hazardous Area markings. These hazardous area approval options are suitable for selection in North America, certain parts of Central America, South America, the European Union, and specific international countries not covered in the Country Specific Approvals section.

The list of countries and regions with -02 or -05 Hazardous Area Approvals as follows:

North America	South America (except Brazil)	Central America	European Union							
Afghanistan	Algeria	Albania	Angola	Australia	Bahrain	Bangladesh	Belize	Benin	Bhutan	Bosnia-Herzegovina
Botswana	Brunei	Burkina Faso	Burundi	Cabo Verde	Cambodia	Cameroon	Central African Republic	Chad	Chile	Comoros
Democratic Republic of the Congo	Republic of the Congo	Cote d'Ivoire	Djibouti	Dominica	East Timor	Egypt	Equatorial Guinea	Eritrea	Estonia	Eswtini
Ethiopia	Fiji	Gabon	The Gambia	Georgia	Ghana	Grenada	Guinea	Guinea-Bissau	Guyana	Iceland
Indonesia	Iran	Iraq	Israel	Jordan	Kenya	Kirabati	Kosovo	Kuwait	Laos	Latvia
Lebanon	Lesotho	Liberia	Libya	Liechtenstein	Lithuania	Madagascar	Malawi	Malaysia	Maldives	Mali
Malta	Marshall Islands	Mauritania	Mauritius	Federated States of Micronesia	Moldova	Monaco	Mongolia	Montenegro	Mozambique	Myanmar
Namibia	Nauru	Nepal	New Zealand	Niger	Nigeria	North Macedonia	Norway	Oman	Pakistan	Palau
Papua New Guinea	Philippines	Qatar	Rwanda	Saint Kitts and Nevis	Saint Lucia	Saint Vincent and the Grenadines	Samoa	San Marino	Sao Tome and Principe	Saudi Arabia
Senegal	Serbia	Seychelles	Sierra Leone	Singapore	Solomon Islands	Somalia	Sri Lanka	Sudan	South Sudan	Suriname
Syria	Switzerland	Tanzania	Thailand	Togo	Tonga	Trinidad and Tobago	Tunisia	Turkey	Tuvalu	Uganda
Vanuatu	Vatican City	Vietnam	Yemen	Zambia	Zimbabwe					

Several countries require their own hazardous area certificate, have special labeling, or other unique demands. They require country-specific options to ensure they are shipped with no issues at customs.
For products with RADIO capabilities refer to the Country Specific Approvals section for comprehensive details on available ordering options or locate the relevant product number within this document.
In case of any further queries; consult the TRS Team.

Country Specific Approvals

Certain countries/regions necessitate additional markings and information beyond marking provided in No Approvals, NORTH AMERICA/cNRTLus or even multi-approvals. These countries have been assigned their own dash options. If the ultimate installation of the product is intended for one of these regions or countries, selecting the corresponding country-specific approval option is imperative, superseding the options outlined above.

For Velomitors and Accelerometers where no "-00" or Country-Specific Safe Area option is available, choose "-05" approval option as it provides necessary markings.

Look for a country-specific ordering option based on the End User Country before considering -00 for safe area, and "MULTI" approval option for hazardous area applications, especially for wireless products.

"*Includes ATEX/IECEx hazardous area markings and rating on the product as applicable.*" – Means that the product won't come with ATEX and IECEx certificate, only the country-specific approval will be sent to the customer, but the ATEX/IECEx markings will be visible on the product. See an example below:



II 3 G Ex nA nC IIC T4 Gc
II 3 G Ex ec nC IIC T4 Gc
CSANe 21ATEX3096X
IECEx CSA 21.0013X

Region/Country	Area of Use	-Option	Country Specific Sample Marking	Description
European Union	**Safe Area**	**-00**	CE	Known as 'NO' approvals. To be chosen for safe area use in the EU. Covers Radio Type Approval (RED) for wireless devices.
	Hazardous Area	**-02 or -05 Based on availability**	C SP® US CE Ex	Known as 'MULTI' approvals. To be chosen for hazardous area use in the EU. Covers Radio Type Approval (RED) for wireless devices. Includes ATEX/IECEx/CSA marking and rating on the product.

Region/Country	Area of Use	-Option	Country Specific Sample Marking	Description
China	**Safe Area**	**-CN0**	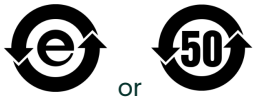 or	Choose this approval option for safe area use when available. Covers the general requirements such as CN RoHS, EMC, LVD and Radio Type Approval as applicable. When not available/not applicable: - Choose -00 for safe area use Note: For Velomitors and Accelerometers where no "-CN0" option is available, choose "-CN" approval option as it provides necessary markings.
	Hazardous Area	**-CN**	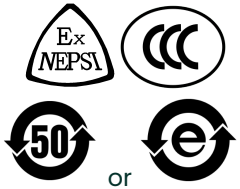 or	Choose this approval option for hazardous area use, covers the NEPSI/CCC requirements as applicable. Covers Radio Type Approval for wireless devices. Includes ATEX/IECEx hazardous area markings and rating on the product as applicable. Note: Choose this for any new 3500 product orders to China due to issues with the -00 label at customs clearance. This is valid until the product line goes to P3. Spares are not affected.
Guyana	**Safe or Hazardous Area**	**–GY**		Choose this approval option for safe area/hazardous area use when available. Covers Guyana Radio Type Approval and the general/hazardous area requirements as applicable. When not available/not applicable: - Choose -00 for safe area use - Choose -02 or -05 for hazardous area use
Indonesia	**Safe or Hazardous Area**	**–ID**	QR code and certificate information required	Choose this approval option for safe area/hazardous area use when available. Covers Indonesia Radio Type Approval and the general/hazardous area requirements as applicable. When not available/not applicable: - Choose -00 for safe area use - Choose -02 or -05 for hazardous area use

Proximity																													
P/N	00	01	02	05	AE	AE0	AU	AZ	AZ0	BR	BY	BY0	CN	IN	JP	K0	KR	KZ	MA	MA0	NZ	R0	RU	TW	U0	UA	UK	UZ	UZ0	ZA
330705	✓	×	×	✓	✓	✓	✓	✓	✓	✓	✓	✓	✓	✓	✓	✓	✓	✓	✓	✓	✓	✓	✓	✓	✓	✓	✓	✓	✓	✓
330706	✓	×	×	✓	✓	✓	✓	✓	✓	✓	✓	✓	✓	✓	✓	✓	✓	✓	✓	✓	✓	✓	✓	✓	✓	✓	✓	✓	✓	✓
330707	✓	×	×	✓	✓	✓	✓	✓	✓	✓	✓	✓	✓	✓	✓	✓	✓	✓	✓	✓	✓	✓	✓	✓	✓	✓	✓	✓	✓	✓
330708	✓	×	×	✓	✓	✓	×	✓	✓	✓	✓	✓	✓	✓	✓	✓	✓	✓	✓	✓	×	✓	✓	✓	✓	✓	✓	✓	✓	✓
330709	✓	×	×	✓	✓	✓	×	✓	✓	✓	✓	✓	✓	✓	✓	✓	✓	✓	✓	✓	×	✓	✓	✓	✓	✓	✓	✓	✓	✓
330710	✓	×	×	✓	✓	✓	×	✓	✓	✓	✓	✓	✓	✓	✓	✓	✓	✓	✓	✓	×	✓	✓	✓	✓	✓	✓	✓	✓	✓
330780	✓	×	×	✓	✓	✓	×	✓	✓	✓	✓	✓	✓	✓	✓	✓	✓	✓	✓	✓	×	✓	✓	✓	✓	✓	×	✓	✓	✓
330850	✓	×	×	✓	✓	✓	×	✓	✓	✓	×	×	✓	✓	✓	✓	✓	✓	✓	✓	×	✓	✓	✓	✓	✓	×	✓	✓	✓
330851	✓	×	×	✓	✓	✓	×	✓	✓	✓	✓	✓	✓	✓	✓	✓	✓	✓	✓	✓	×	✓	✓	✓	✓	✓	✓	✓	✓	✓
330876	✓	×	×	✓	✓	✓	×	×	×	✓	×	×	✓	✓	✓	✓	✓	✓	✓	✓	×	✓	✓	✓	✓	✓	×	✓	✓	✓
330878	✓	×	×	✓	✓	✓	×	×	×	✓	×	×	✓	✓	✓	✓	✓	✓	✓	✓	×	✓	✓	✓	✓	✓	×	✓	✓	✓
330901	✓	×	×	✓	✓	✓	×	✓	✓	✓	✓	✓	✓	✓	✓	✓	✓	✓	✓	✓	×	✓	✓	✓	✓	✓	✓	✓	✓	✓
330902	✓	×	×	✓	✓	✓	×	✓	✓	✓	✓	✓	✓	✓	✓	✓	✓	✓	✓	✓	×	✓	✓	✓	✓	✓	✓	✓	✓	✓
330903	✓	×	×	✓	✓	✓	×	✓	✓	✓	✓	✓	✓	✓	✓	✓	✓	✓	✓	✓	×	✓	✓	✓	✓	✓	✓	✓	✓	✓
330904	✓	×	×	✓	✓	✓	×	✓	✓	✓	✓	✓	✓	✓	✓	✓	✓	✓	✓	✓	×	✓	✓	✓	✓	✓	✓	✓	✓	✓
330905	✓	×	×	✓	✓	✓	×	✓	✓	✓	✓	✓	✓	✓	✓	✓	✓	✓	✓	✓	×	✓	✓	✓	✓	✓	✓	✓	✓	✓
330906	✓	×	×	✓	✓	✓	×	✓	✓	✓	✓	✓	✓	✓	✓	✓	✓	✓	✓	✓	×	✓	✓	✓	✓	✓	×	✓	✓	✓
330907	✓	×	×	✓	✓	✓	×	✓	✓	✓	✓	✓	✓	✓	✓	✓	✓	✓	✓	✓	×	✓	✓	✓	✓	✓	×	✓	✓	✓
330908	✓	×	×	✓	✓	✓	×	✓	✓	✓	✓	✓	✓	✓	✓	✓	✓	✓	✓	✓	×	✓	✓	✓	✓	✓	×	✓	✓	✓
330909	✓	×	×	✓	✓	✓	×	✓	✓	✓	✓	✓	✓	✓	✓	✓	✓	✓	✓	✓	×	✓	✓	✓	✓	✓	×	✓	✓	✓
330910	✓	×	×	✓	✓	✓	×	✓	✓	✓	✓	✓	✓	✓	✓	✓	✓	✓	✓	✓	×	✓	✓	✓	✓	✓	×	✓	✓	✓
330980	✓	×	×	✓	✓	✓	×	✓	✓	✓	✓	✓	✓	✓	✓	✓	✓	✓	✓	✓	×	✓	✓	✓	✓	✓	×	✓	✓	✓

Seismic Acceleration																																							
P/N	00	01	02	04	05	AE	AE0	AR	AU	AU/NZ	AZ	AZ0	BR	BY	BY0	CN	CN0	DZ	IN	JP	K0	KR	KR0	KZ	MA	MA0	NZ	OM	R0	RU	TH	TW	TZ	TZ0	U0	UA	UK	UZ	UZ0	ZA
200350	✓	✓	×	×	×	✓	✓	✓	✓	×	✓	✓	✓	✓	✓	✓	✓	✓	✓	×	✓	✓	×	✓	✓	✓	✓	✓	✓	✓	×	✓	✓	×	✓	✓	×	✓	×	✓

Baker Hughes