FIELD INSTALLATION QUICK GUIDE

Installation Instructions

330904-00-09-10-02-CN

Armored proximity sensing probe

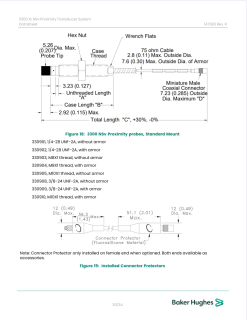

PRODUCT	330904-00-09-10-02-CN
FAMILY	3300 XL NSv
FUNCTION	Armored proximity sensing probe
STATUS	Verify exact installed equipment

Prepared by Amikon Limited from Bently Nevada documentation. This guide supplements the complete manufacturer manual and site procedure.

01 CONFIRM THE ORDERED CONFIGURATION

Case thread	M8 x 1
Unthreaded length	0 mm
Overall case length	90 mm
Total probe length	1.0 m
Lead construction	Stainless steel armor
Connector selection	02: miniature coaxial ClickLoc, standard cable

02 PREPARATION AND CONNECTION

- Use the M8 x 1 mount; limit engagement to 12 mm.
- Match the 1 m probe with the selected 5 m or 7 m NSv chain.
- Keep cable bends at 25.4 mm radius or greater.
- Join ClickLoc connectors finger tight; maximum coupling is 0.56 N m.

03 OFFICIAL INSTALLATION REFERENCE

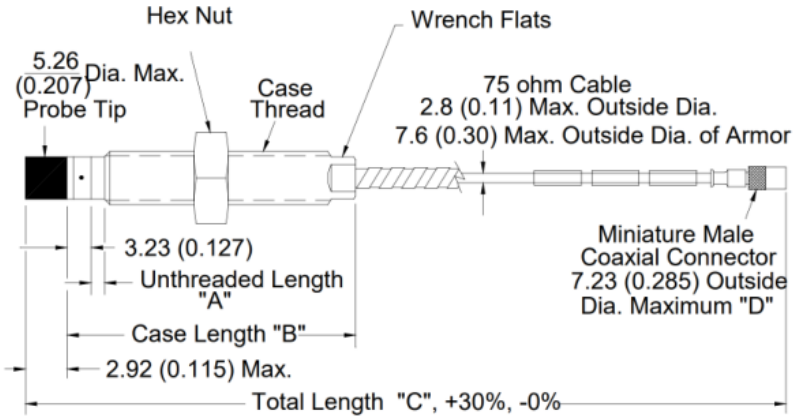

Figure 18: 3300 NSv Proximity probes, Standard Mount

330901, 1/4-28 UNF-2A, without armor

330902, 1/4-28 UNF-2A, with armor

330903, M8X1 thread, without armor

330904, M8X1 thread, with armor

330905, M10X1 thread, without armor

330908, 3/8-24 UNF-2A, without armor

330909, 3/8-24 UNF-2A, with armor

330910, M10X1 thread, with armor

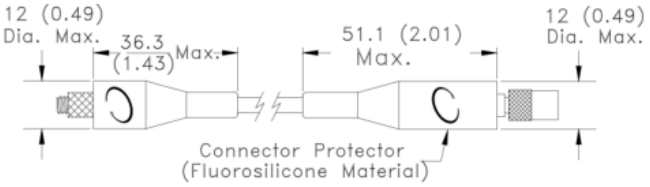

Note: Connector Protector only installed on female end when optioned. Both ends available as accessories.

Figure 19: Installed Connector Protectors

Official manufacturer page reproduced at its original aspect ratio.

04 COMMISSIONING CHECKS

01	Verify the complete probe identity and ordered case length.
02	Inspect the PPS tip, case thread and standard cable connection.
03	Check probe resistance disconnected: 4.2 +/- 0.5 ohm.
04	Confirm matching NSv extension and Proximitor calibration.
05	Set the documented 1.0 mm reference gap for standard conditions.
06	Verify the complete chain response on the intended target.

05 CONTROLLED DOCUMENT

Official source	Bently Nevada 147385 Rev. R; approval guide 108M1756 Rev. AV.
Product record	330904-00-09-10-02-CN
Manufacturer	Bently Nevada
Warranty	12 months from AMIKON
Support	INFO@AMIKON.CN

AMIKON PRODUCT SUPPORT

+86-18020776786 INFO@AMIKON.CN **AMIKONG.COM**