FIELD INSTALLATION QUICK GUIDE

Installation Instructions

1764-MM2

Sixteen kilobyte program memory module

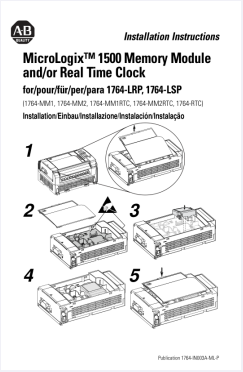

PRODUCT	1764-MM2
FAMILY	MicroLogix 1500
FUNCTION	Sixteen kilobyte program memory module
STATUS	Verify exact installed equipment

Prepared by Amikon Limited from Allen-Bradley documentation. This guide supplements the complete manufacturer manual and site procedure.

01 CONFIRM THE ORDERED CONFIGURATION

Memory capacity	16K
Compatible processor units	1764-LSP and 1764-LRP
Programs retained	One user program at a time
Backup contents	User program and data
Program comparison	Supported
Data-file download protection	Configurable, per data file

02 PREPARATION AND CONNECTION

- Place the controlled process in its approved maintenance condition.
- Remove the processor cover or fitted data access tool.
- Avoid touching connector pins and exposed sensitive parts.
- Seat the memory module and refit the cover as illustrated.

03 OFFICIAL INSTALLATION REFERENCE

Installation Instructions

MicroLogix™ 1500 Memory Module and/or Real Time Clock

for/pour/für/per/para 1764-LRP, 1764-LSP

(1764-MM1, 1764-MM2, 1764-MM1RTC, 1764-MM2RTC, 1764-RTC)

Installation/Einbau/Installazione/Instalación/Instalação

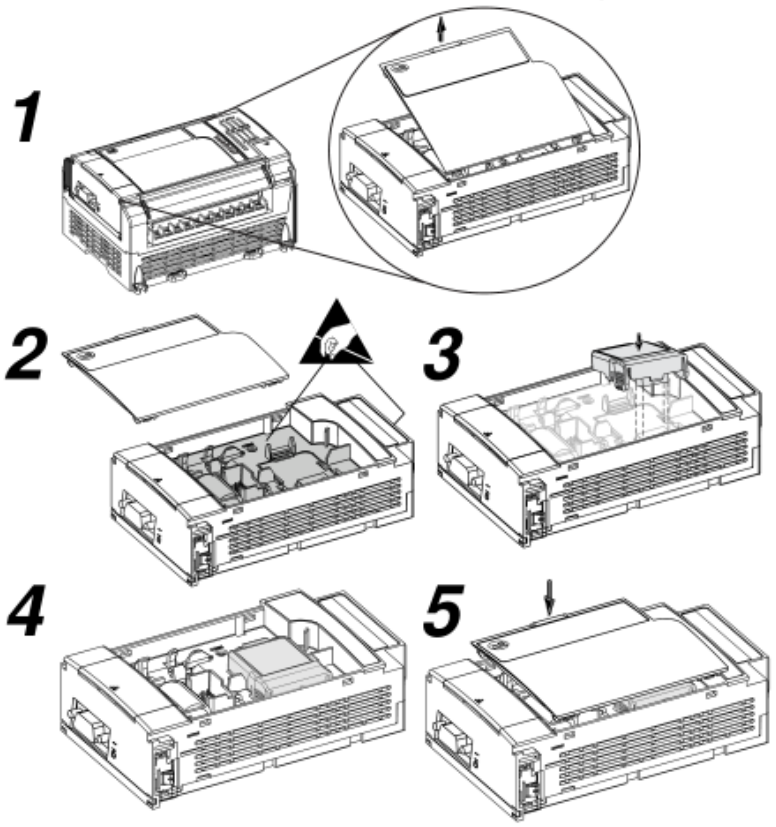

Publication 1764-IN003A-ML-P

Official manufacturer page reproduced at its original aspect ratio.

04 COMMISSIONING CHECKS

01	Check 1764-MM2 identity and 16K memory-only scope.
02	Confirm the compatible 1764-LSP or 1764-LRP processor.
03	Inspect cover seating and module connection.
04	Allow the required recognition state after insertion during RUN.
05	Verify module identity in the MMI file.
06	Confirm program and protected data before normal service.

05 CONTROLLED DOCUMENT

Official source	Allen-Bradley MicroLogix 1500 User Manual 1764-UM001B-EN-P; memory-module pages 1-4, 2-20/21 and 6-3/5
Product record	1764-MM2
Manufacturer	Allen-Bradley
Warranty	12 months from AMIKON
Support	INFO@AMIKON.CN

AMIKON PRODUCT SUPPORT

+86-18020776786 INFO@AMIKON.CN **AMIKONG.COM**