MANUFACTURER DOCUMENT PACKAGE

Manufacturer's Manual

Reference package for procurement and maintenance review

CONTROL TECHNIQUES

UNI1405

UNIDRIVE 4 KW AC DRIVE

Used with the applicable Unidrive UNI1400 configuration.

REFERENCE PACKAGE

OFFICIAL DOCUMENT

Selected official manufacturer pages follow this cover.

Source: Control Techniques Unidrive user guide

Declaration of Conformity

Control Techniques Ltd
The Gro
Newtown
Powys
UK
SY16 3BE

UNI1201	UNI1202	UNI1203	UNI1204	UNI1205
UNI2201	UNI2202	UNI2203		
UNI3201	UNI3202	UNI3203	UNI3204	

UNI1401	UNI1402	UNI1403	UNI1404	UNI1405
UNI2401	UNI2402	UNI2403		
UNI3401	UNI3402	UNI3403	UNI3404	UNI3405
UNI4401	UNI4402	UNI4403	UNI4404	UNI4405
UNI5401				

The AC variable speed drive products listed above, including the VTC, LFT (all sizes) and REGEN (UNI3401 to UNI4405 only) variants, have been designed and manufactured in accordance with the following European harmonised, national and international standards:

EN 60249	Base materials for printed circuits
IEC326-1	Printed boards: general information for the specification writer
IEC326-5	Printed boards: specification for single- and double-sided printed boards with plated-through holes
IEC326-6	Printed boards: specification for multilayer printed boards
IEC664-1	Insulation co-ordination for equipment within low-voltage systems: principles, requirements and tests
EN 60529	Degrees of protection provided by enclosures (IP code)
UL94	Flammability rating of plastic materials
UL508C	Standard for power conversion equipment
EN 50081-1[1]	Generic emission standard for the residential, commercial and light industrial environment
EN 50081-2	Generic emission standard for the industrial environment
EN 50082-2	Generic immunity standard for the industrial environment
EN 61800-3	Adjustable speed electrical power drive systems - Part 3: EMC product standard including specific test methods

[1] Conducted emission sizes 1 to 3, not size 4 or 5. See the relevant EMC Data Sheet.

These products comply with the Low Voltage Directive 73/23/EEC, the Electromagnetic Compatibility (EMC) Directive 89/336/EEC and the CE Marking Directive 93/68/EEC.



W. Drury
Executive Vice President, Technology
Newtown

Date: 26 September 2001

These electronic drive products are intended to be used with appropriate motors, controllers, electrical protection components and other equipment to form complete end products or systems. Compliance with safety and EMC regulations depends upon installing and configuring drives correctly, including using the specified input filters. The drives must be installed only by professional assemblers who are familiar with requirements for safety and EMC. The assembler is responsible for ensuring that the end product or system complies with all the relevant laws in the country where it is to be used. A *Unidrive EMC Data Sheet* is also available giving detailed EMC information.

Example

To calculate the size of an enclosure for the following:

- Two UNI1405 models
- Each drive to operate at 4.5kHz PWM switching frequency
- RFI filter for each drive
- Braking resistors are to be mounted outside the enclosure
- Maximum ambient temperature inside the enclosure: 40°C
- Maximum ambient temperature outside the enclosure: 30°C

Dissipation of each drive: 190W

Dissipation of each RFI filter: 7.7W (max)

Total dissipation: 2 x (190 + 7.7) = 395.4W

The enclosure is to be made from painted 2mm (0.079 in) sheet steel having a heat transmission coefficient of 5.5W/m^2/°C. Only the top, front, and two sides of the enclosure are to be free to dissipate heat.

Figure 3-15 Enclosure having front, sides and top panels free to dissipate heat

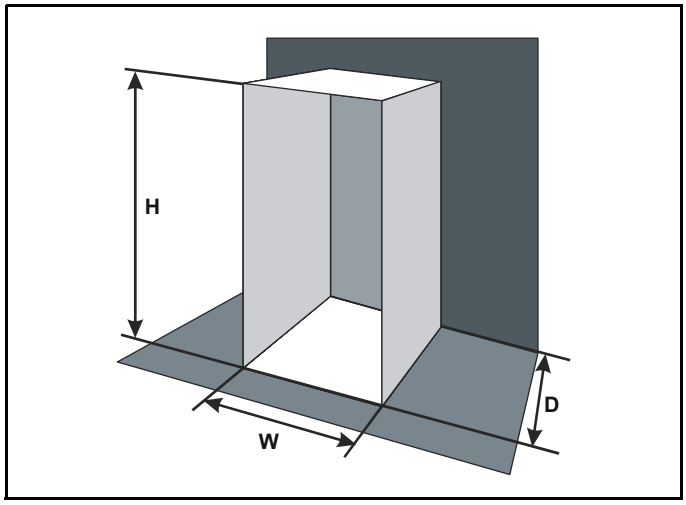

Insert the following values:

T_{int}	40°C
T_{ext}	30°C
k	5.5
P	395.4W

The minimum required heat conducting area is then:

$$A_e = \frac{395.4}{5.5(40-30)}$$

=7.2m^2 (78ft^2) (1m = 3.3 ft)

Estimate two of the enclosure dimensions - the height (H) and depth (D), for instance. Calculate the width (W) from:

$$W = \frac{A_e - 2HD}{H + D}$$

Inserting **H** = 2m and **D** = 0.6m, obtain the minimum width:

$$W = \frac{7.2 - (2 \times 2 \times 0.6)}{2 + 0.6}$$

= 1.8m (6ft)

If the enclosure is too large for the space available, it can be made smaller only by attending to one or all of the following:

- Using a lower PWM switching frequency to reduce the dissipation in the drives
- Reducing the ambient temperature outside the enclosure, and/or applying forced-air cooling to the outside of the enclosure
- Reducing the number of drives in the enclosure
- Removing other heat-generating equipment

Calculating the air-flow in a ventilated enclosure

The dimensions of the enclosure are required only for accommodating the equipment. The equipment is cooled by the forced air flow.

Calculate the minimum required volume of ventilating air from:

$$V = \frac{3kP}{T_{int} - T_{ext}}$$

Where:

V	Air-flow in m^3 per hour
T_{ext}	Maximum expected ambient temperature in °C *outside* the enclosure
T_{int}	Maximum permissible ambient temperature in °C *inside* the enclosure
P	Power in Watts dissipated by *all* heat sources in the enclosure
k	Ratio of $\frac{P_o}{P_l}$

Where:

P_0 is the air pressure at sea level

P_l is the air pressure at the installation

Typically use a factor of 1.2 to 1.3, to allow also for pressure-drops in dirty air-filters.

Example

To calculate the size of an enclosure for the following:

- Three UNI3401 models
- Each drive to operate at 6kHz PWM switching frequency
- RFI filter for each drive
- Braking resistors are to be mounted outside the enclosure
- Maximum ambient temperature inside the enclosure: 40°C
- Maximum ambient temperature outside the enclosure: 30°C

Dissipation of each drive: 670W

Dissipation of each RFI filter: 12.8W (max)

Total dissipation: 3 x (670 + 60) = 2048.4W

Insert the following values:

T_{int}	40°C
T_{ext}	30°C
k	1.3
P	2048.4W

Then:

$$V = \frac{3 \times 1.3 \times 2048.4}{40 - 30}$$

= 799m^3 / hr (471ft^3 / min)

(1m ^{3}/ hr = 0.59ft^3 /min)

3.11.1 Unidrive size 1 filters

Figure 3-21 Unidrive size 1 bookcase mounted filter

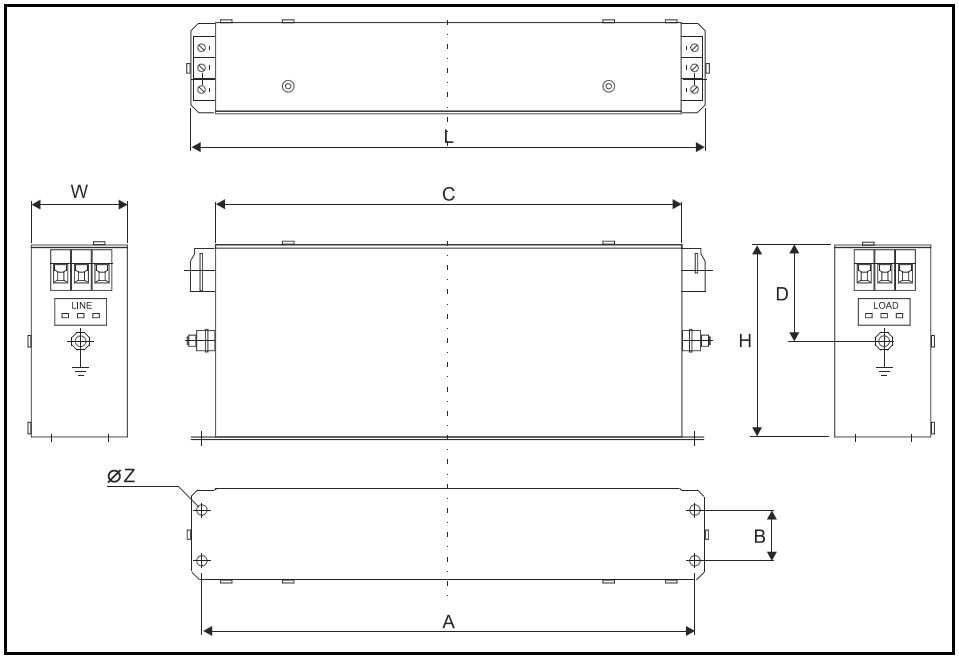

Dimension	RFI Filter
	4200-6105 FS5111-10-29
Model	UNI1201 to UNI1205 UNI1401 to UNI1405
A	230mm (9.055in)
B	25mm (0.984in)
C	218mm (8.583in)
D	47.5mm (1.870in)
H	95mm (3.740in)
L	240mm (9.449in)
W	45mm (1.772in)
Z	4.5mm (0.177in)
Ground Terminal	M5

Figure 3-22 Unidrive size 1 footprint or bookcase mounted filter

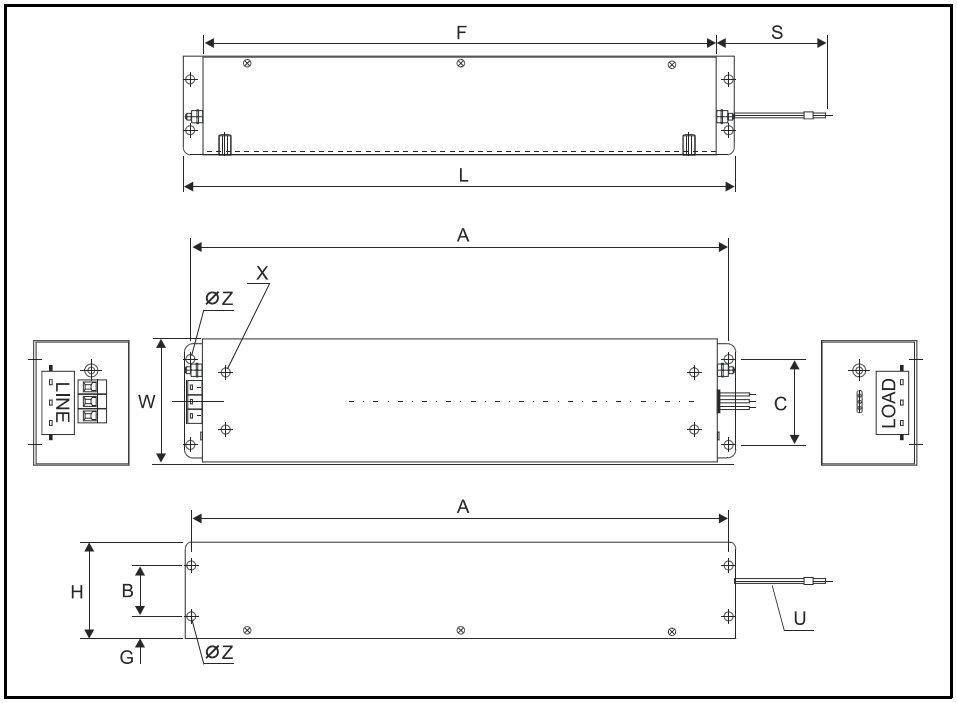

Dimension	RFI Filter
	4200-6104 FS5101-10-07
Model	UNI1201 to UNI1205 UNI1401 to UNI1405
A	380mm (14.961in)
B	35mm (1.378in)
C	60mm (2.362in)
F	364mm (14.331in)
G	16.5mm (0.650in)
H	68mm (2.677in)
L	390mm (15.354in)
S	300mm ±5mm (11.811in ±0.197in)
U	3x 2.5mm^2 (AWG14)
W	85mm (3.346in)
X	M6 (4x)
Z	5.5mm (0.217in)
Ground Terminal	M5