PACSystems* RX3i and Series 90*-30

IC694ALG442 and IC693ALG442

GFK-2687A
May 2012

Analog Module, 4 Inputs/2 Outputs, Current/Voltage

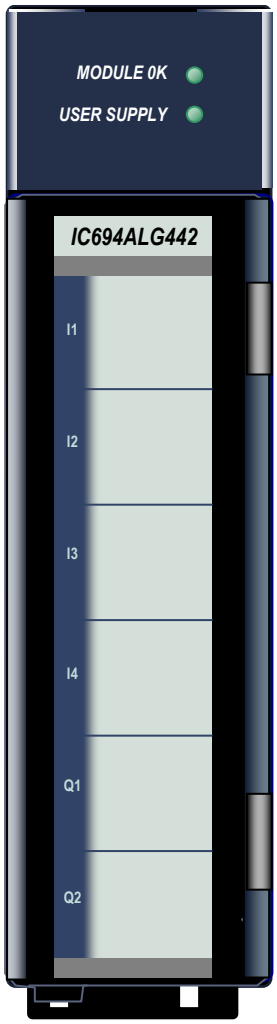

Analog Current/Voltage Input/Output module, ALG442, provides four differential input channels and two single-ended output channels. Each channel can be configured with the Machine Edition software for one of the following ranges:

- 0 to +10 volts (unipolar), default.
- -10 to +10 volts (bipolar)
- 0 to 20 mA
- 4 to 20 mA

Input channels can also be configured for 4 - 20 mA Enhanced mode.

This module may be installed in any I/O slot that has a serial connector in an RX3i or Series 90-30 system.

Module Features

Outputs can be configured to either Hold Last State or to reset to the low end of their range if system power is interrupted. Outputs can also be configured to operate in ramp mode on command from the application program. In ramp mode, the output channel transitions to a new value over a period of time, rather than taking the new value immediately.

High and low alarm limits can be set for all input channels and an open-wire fault (current output modes) can be reported to the CPU for each output channel.

ALG442 modules in RX3i racks support firmware upgrades in the field.

Isolated +24 VDC Power

This module requires 150 mA plus loop current(s) from a user-supplied +24 VDC supply.

LEDs

The **MODULE OK** LED provides module status information as follows:

ON: status is OK, module configured;
OFF: no backplane power or software not running (watchdog timer timed out);
Continuous rapid blinking: configuration data not received from CPU;
Slow blinking, then OFF: failed power-up diagnostics or encountered code execution error.

The **USER SUPPLY** LED indicates that the external 24 VDC supply is within specifications.

Specifications: ALG442

Power Requirements	
External Supply Voltage Range	20 to 30 VDC (24 VDC typical)
Power Supply Rejection Ratio	Current: 5 µA/V (typical), 10 µA/V (maximum) Voltage: 25 mV/V (typical), 50 mV/V (maximum) (Measured by varying V_{USER} from 24 VDC to 30 VDC)
Voltage Ripple	10%
Power Consumption	95 mA from internal +5 VDC Supply, 150 mA from external +24 VDC supply
Update Rate	Update Rate: 3 ms
Isolation, Field to Backplane (optical) and to Frame Ground	250 VAC continuous; 1500 VAC for 1 minute
Analog Outputs	Two, Single–Ended
Analog Current Output	
Output Ranges	0 to 20 mA, 4 to 20 mA
Resolution	0 to 20 mA: 0.6 µA (1 LSB = 0.6 µA) 4 to 20 mA: 0.5 µA (1 LSB = 0.5 µA)
Absolute Accuracy[1,5]	±0.1% of full scale @ 25°C (77°F), typical ±0.25% of full scale @ 25°C (77°F), maximum ±0.5% of full scale over operating temperature range (maximum)
Maximum Compliance Voltage	V_{USER} –3 V (minimum) to V_{USER} (maximum)
User Load	0 to 850Ω (minimum at V_{USER} = 20 V, maximum 1350Ω at V_{USER} = 30 V)
Output Load Capacitance	2000 pF (maximum)
Output Load Inductance	1 H (maximum)
Analog Voltage Output	
Output Ranges	-10 to +10 V (bipolar), 0 to +10 V (unipolar)
Resolution	–10 V to +10 V: 0.3125 mV (1 LSB = 0.3125 mV) 0 to +10 V: 0.3125 mV (1 LSB = 0.3125 mV)
Absolute Accuracy[2,5]	±0.25% of full scale @ 25°C (77°F), typical ±0.5% of full scale @ 25°C (77°F), maximum ±1.0% of full scale over operating temperature range (maximum)
Output Loading	5 mA (2 K Ohms minimum resistance)
Output Load Capacitance	1 µF (maximum capacitance)
Analog Inputs	Four, differential
Analog Current Input	
Input Ranges	0 to 20 mA, 4 to 20 mA, 4 to 20 mA Enhanced
Resolution	5 µA (1 LSB = 5 µA)
Absolute Accuracy[3,]	± 0.25% of full scale @25°C (77°F) ±0.5% of full scale over specified operating temperature range
Linearity	<1 LSB
Common Mode Voltage	200 VDC (maximum)
Common Mode Rejection	>70 dB at DC; >70 dB at 60 Hz
Cross Channel Rejection	>70 dB from DC to 1 kHz
Input Impedance	250 Ω
Input Filter Response	38 Hz

1 Analog Current output: In the presence of severe Radiated RF interference (IEC 61000-4-3, 10V/m), accuracy may be degraded to ±1% of full scale.

2 Analog Voltage output: In the presence of severe Radiated RF interference (IEC 61000-4-3, 10V/m), accuracy may be degraded to ±4% of full scale.

Specifications, continued

Analog Voltage Input	
Input Ranges	0 to +10 V (unipolar), -10 to +10 V (bipolar)
Resolution	0 to +10 V: 2.5 mV (1 LSB = 2.5 mV) –10 to +10 V: 5 mV (1 LSB = 5 mV)
Absolute Accuracy[4,5]	±0.25% of full scale @25°C (77°F); ±0.5% of full scale over specified operating temperature range
Linearity	<1 LSB
Common Mode Voltage	200 VDC (maximum)
Common Mode Rejection	>70 dB at DC; >70 dB at 60 Hz
Cross Channel Rejection	>70 dB from DC to 1 kHz
Input Impedance	800 K Ohms typical)
Input Filter Response	38 Hz

3 Analog Current Input: In the presence of severe Radiated RF interference (IEC 61000-4-3, 10V/m), accuracy may be degraded to ±2% of full scale.

4 Analog Voltage Input: In the presence of severe Radiated RF interference (IEC 61000-4-3, 10V/m), accuracy may be degraded to ±1% of full scale.

5 Applicable for all outputs and inputs: In the presence of severe Conducted RF interference (IEC 61000-4-6, 10Vrms), accuracy may be degraded to ±2% of full scale.

Refer to the applicable Installation or System manual for product standards, general operating specifications, and installation requirements:

Series 90-30 Installation Manual, GFK-0356
Series 90-30 systems: *Installation Requirements for Conformance to Standards,* GFK-1179
PACSystems RX3i System Manual, GFK-2314

Field Wiring: ALG442

The diagram below shows voltage and current connections for the module. Each channel can be configured independently as a voltage or a current channel, not both simultaneously.

Terminal	Signal	Definition
1	24VIN	User Supplied +24 VDC Input
2	JMP1	Jumper terminal for connecting 250Ω sense resistor for CH1 current mode
3	JMP2	Jumper terminal for connecting 250Ω sense resistor for CH2 current mode
4	+CH1	Positive connection for differential analog input channel 1
5	+CH2	Positive connection for differential analog input channel 2
6	-CH1	Negative connection for differential analog input channel 1
7	-CH2	Negative connection for differential analog input channel 2
8	JMP3	Jumper terminal for connecting 250Ω sense resistor for CH3 current mode
9	JMP4	Jumper terminal for connecting 250Ω sense resistor for CH4 current mode
10	+CH3	Positive connection for differential analog input channel 3
11	+CH4	Positive connection for differential analog input channel 4
12	-CH3	Negative connection for differential analog input channel 3
13	-CH4	Negative connection for differential analog input channel 4
14	V_{out} CH1	Voltage output for channel 1
15	I_{out} CH1	Current output for channel 1
16	V_{out} CH2	Voltage output for channel 2
17	I_{out} CH2	Current output for channel 2
18	V COM	Common return for voltage outputs
19	I RET	Common return for User supplied +24 V and current outputs
20	GND	Frame ground connections for cable shields

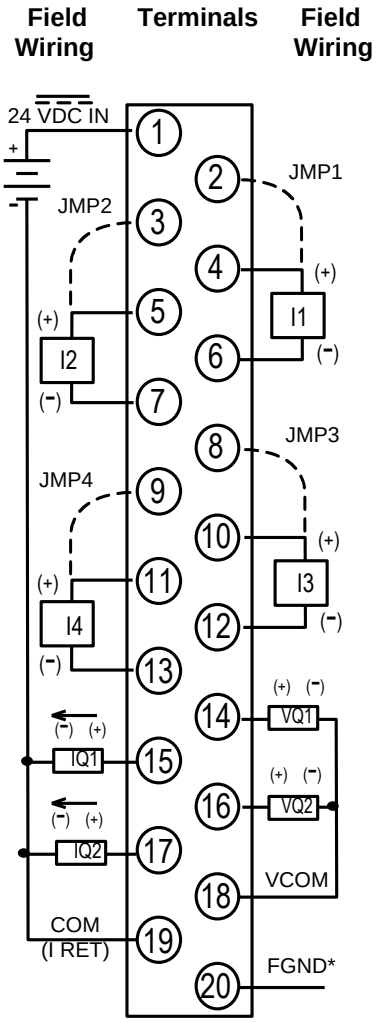

* Optional Shield Connection

Configuration: ALG442

The following module parameters can be configured using the Machine Edition software.

Module Settings

Parameter	*Choices*	*Description*
Stop Mode	Hold (default) or DeFlow	Output state when module goes from Run to Stop mode. If the configured Stop Mode is *Hold,* the module holds outputs at the last state received from the CPU. If the Stop Mode is *Default Low,* the outputs will go to their low values as follows: Current mode (4-20 mA): outputs go to 4 mA Current mode (0-20 mA): outputs go to 0 mA Voltage mode (unipolar (0 to +10V) and bipolar (+10V to -10V): outputs go to 0V
Input Channel Value Reference Address	Valid memory type: %AI	Starting %AI address for the module's analog input data
Input Channel Value Reference Length	Read-only	Each input channel provides 16 bits (1 word) of analog input data to the Controller CPU.
Output Channel Value Reference Address	Valid memory type: %AQ	Starting %AQ address for the module's analog output data
Output Channel Value Reference Length	Read-only	Each input channel receives 16 bits (1 word) of analog input data to the Controller CPU.
Module Status Reference Address	Valid memory type: %I	Starting %I address for the module's status data
Module Status Reference Length	0 (Module status reporting Disabled) 8 (module and power status only) 16 (above plus input status) 24 (all above plus output status)	Number of status bits (0 to 24) that will be used for module and channel status data. When set to 0, status reporting is disabled. To enable status reporting, set this parameter to a value other than 0. For data format, see page 8.
I/O Scan Set	1 through 32	Assigns the module to an I/O Scan Set defined for the CPU.

Output Channel Data

Parameter	*Choices*	*Description*
Output Range	0 to +10 V, -10 to +10 V, 4 to 20 mA, 0 to 20 mA	Type of output range.

Input Channel Data

Parameter	*Choices*	*Description*
Input Range	0 to +10 V, -10 to +10 V, 4 to 20 mA, 0 to 20 mA, 4 to 20 mA Enhanced	Type of input range
Alarm Low Limit	-32768 to 32759	Low limit alarm value for each input. Must be less than the same channel's high alarm.
Alarm High Limit	-32768 to 32760	High limit alarm value for each input. The Alarm Low and Alarm High parameters can be used to set up limits that cause alarms to be passed to the Controller for each channel. Values entered without a sign are assumed to be positive. These configured alarm limits are stored until changed by a new configuration. The configured high and low alarm limits can be changed temporarily by a COMM_REQ command.

Input Scaling

Resolution per bit depends on the configured input or output range as shown in the table of module specifications. The module scales each current and voltage input to a value in counts for the CPU.

Configured Range	Scaled Counts Values
0 to 10 V (default)	0 to 32767
-10 to 10 V	-32768 to 32767
4 to 20 mA	0 to 32767
0 to 20 mA	0 to 32767
4 to 20 mA Enhanced	-8000 to 32,767

In the 0 to +10 V default range, 0 volts corresponds to a count of 0 and +10 volts corresponds to a count of 32000. In the -10 to +10 volt range, -10 volts corresponds to a count of -32000 and +10 volts corresponds to a count of +32000. Full 12-bit resolution is available over either range.

In the 4 to 20 mA range, 4 mA corresponds to a count of 0 and 20 mA corresponds to a count of 32000. In the 0 to 20 mA range, 0 mA corresponds to a count of 0 and 20 mA corresponds to a count of 32000. Full 12-bit resolution is available over the 0 to 20 mA range. The module allows an overrange of 32001 to 32767. .

In the 4 to 20 mA Enhanced range, 0 mA corresponds to a count of -8000, 4 mA corresponds to a count of 0 (zero) and 20 mA corresponds to a count of +32000. The Enhanced range automatically provides 4 to 20 mA range scaling. Negative digital values are provided for input current levels between 4 mA and 0 mA. This creates a low alarm limit that detects when the input current falls from 4 mA to 0 mA, providing open-wire fault detection in 4 to 20 mA applications.

Input Voltage Scaling

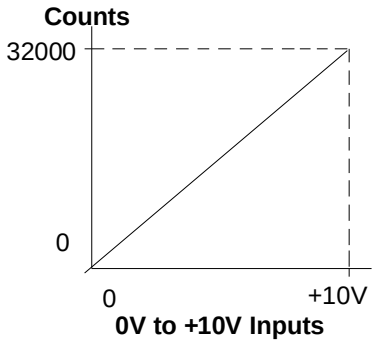

Input Current Scaling

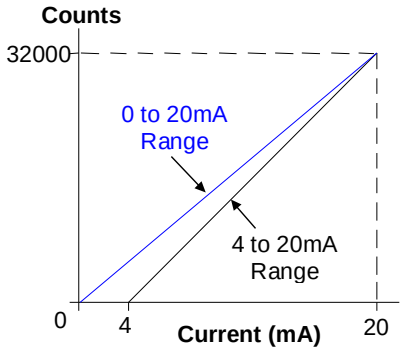

If the current source is reversed into the input, or is less than the low end of the current range, the module inputs a data word corresponding to the low end of the current range (0000H in %AI). If an input is out of range (greater than 20 mA), the A/D converter adjusts it to full scale (corresponding to 7FFFH in %AI).

Output Scaling

The module scales counts data received from the CPU to a current or voltage value for each output.

Configured Range	*Values Sent By CPU*	*Values Accepted by Module*
0 to 10 V (default)	0 to 32767	0 to 32767
-10 to 10 V	-32768 to 32767	- 32768 to 32767
4 to 20 mA	0 to 32767	0 to 32000
0 to 20 mA	0 to 32767	0 to 32767

For a 0 to 10 V output, the module scales count outputs from 0 to 32000 to output voltages from 0 to +10 volts. The module scales count values from 32001 to 32767 to overrange voltages up to a maximum of approximately 10.24 volts.

For a -10 to +10 V output, the module scales count outputs in the range ±32000 to output voltages from -10 V to +10 V. The module scales count values from -32001 to -32768 and from +32001 to +32767 to overrange voltages up to a maximum of approximately ±10.24 V.

For a 4 to 20 mA output, the module scales count outputs from 0 to 32000 counts to output currents from 4 to 20 mA. If the CPU sends a value above 32000 counts, the module truncates the value to 32000 in the D/A converter. No error is returned.

For a 0 to 20 mA output, the module scales count outputs from 0 to 32000 to output currents from 0 to 20 mA. The module scales count values from 32001 to 32767 up to a maximum output current of approximately 20.5 mA.

Output Voltage Scaling ***Output Current Scaling***

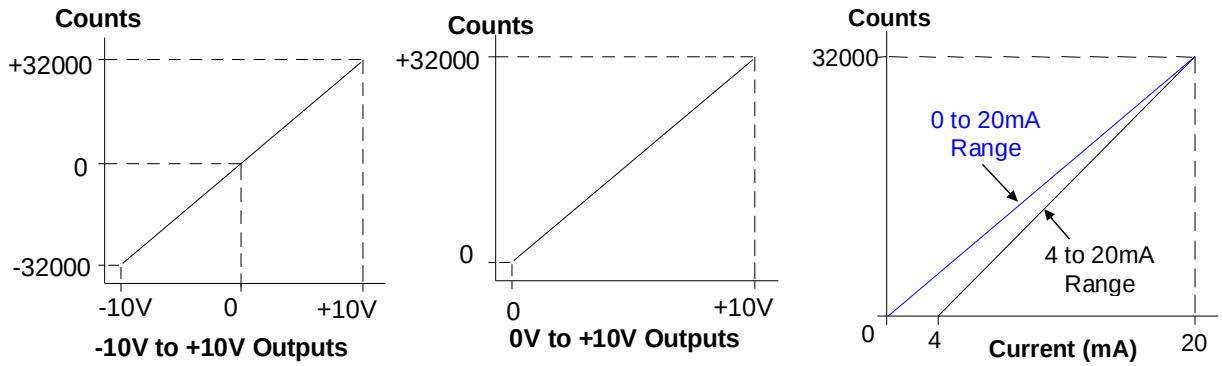

I/O Data: ALG442

This module uses two %AQ references and four %AI references, depending on configuration. Data in the %AI and %AQ registers is in 16-bit 2's complement format. The module also uses 8, 16 or 24 %I references for status data, depending on the alarm status configuration. Status data format is shown on the next page.

MSB LSB

X	11	10	9	8	7	6	5	4	3	2	1	0	X	X	X

Input Data

Resolution of the converted signal is 12 bits binary (1 part in 4096). The placement of the 12 bits from the A/D converter in the %AI data word is shown above.

The bits in the %AI data table that were not used are forced to 0 (zero) by the analog input channel.

Output Data

Each output channel is capable of converting 15 to 16 bits (depending on the range selected) of binary data to an analog output.

Status Data: ALG442

The Analog Module can be configured to return 8, 16, or 24 status bits to the Controller CPU.

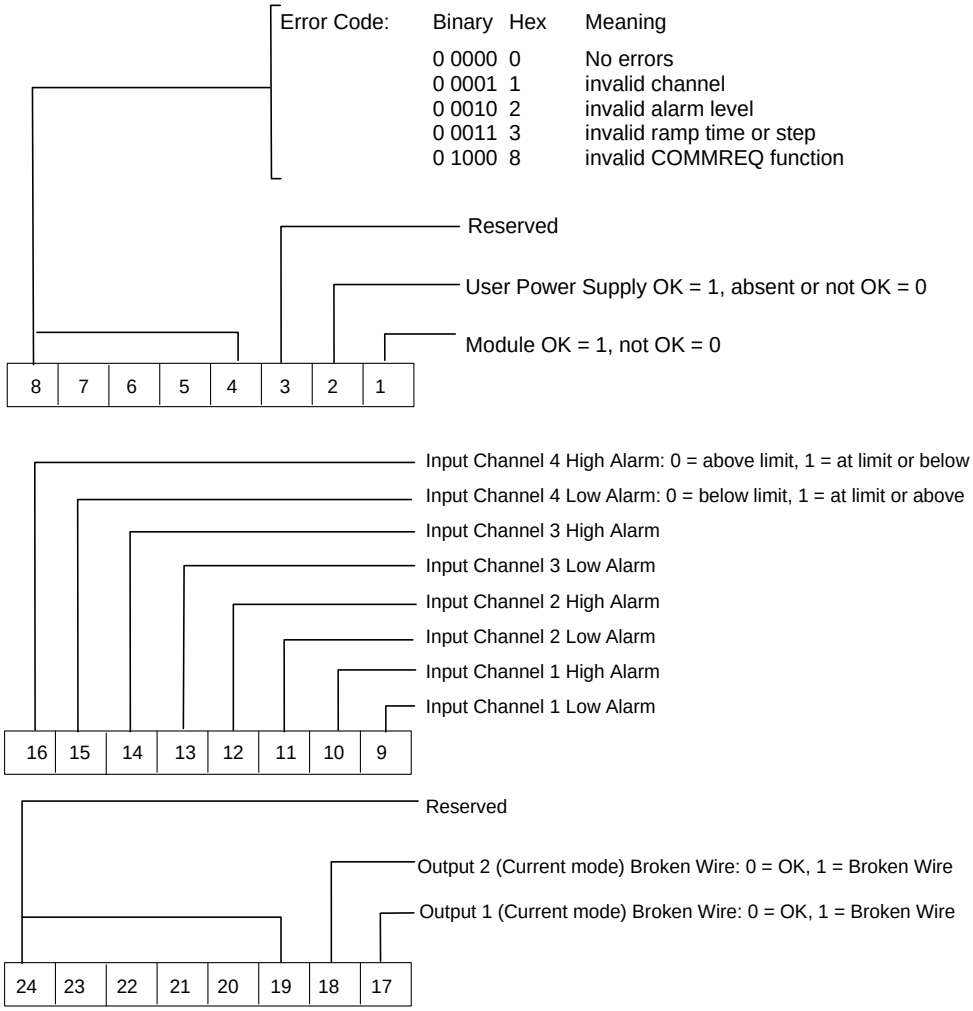

Error Code

Byte 1 of the status data contains a status/error code for COMM_REQs sent to the module. Only the most recent error is reported; an existing error code will be overwritten if another error occurs. The priority of errors is:

1. Invalid COMM_REQ function (highest priority)
2. Invalid channel.
3. Invalid data (ramp or alarm parameter) (lowest priority).

If multiple errors occur, the one with the highest priority is reported in the error code. The module will not stop standard operation if an error is detected; these error bits are informational only, and can be ignored.