12/24 Volt DC Positive Logic Output - 0.5 Amp, 8 Point IC693MDL732

This ***12/24 volt DC Positive Logic 0.5 Amp Outpu***t module for the Series 90-30 Programmable Logic Controller provides 8 output points in one group of eight with a common power output terminal. This output module is designed to have positive logic characteristics in that it sources current to the loads from the user common or positive power bus. The output device is connected between the negative power bus and the module output. The output characteristics are compatible with a wide range of user-supplied load devices, such as: motor starters, solenoids, and indicators. Power to operate the field devices must be supplied by the user.

LED indicators which provide the ON/OFF status of each point are located at the top of the module. This LED block has two horizontal rows with eight green LEDs in each row with the top row labeled A1 through 8 (points 1 through 8) and the bottom row labeled B1 through 8 (points 9 through 16). An insert goes between the inside and outside surface of the hinged door. The surface towards the inside of the module (when the hinged door is closed) has circuit wiring information, and circuit identification information can be recorded on the outside surface. The outside left edge of the insert is color-coded blue to indicate a low-voltage module. There are no fuses on this module.

This module can be installed in any I/O slot of a 5 or 10-slot baseplate in a Series 90-30 PLC system.

Table 7-9. Specifications for IC693MDL732

Rated Voltage	12/24 volts DC
Output Voltage Range	12 to 24 volts DC (+20%, –15%)
Outputs per Module	8 (one group of eight outputs)
Isolation	1500 volts between field side and logic side
Output Current	0.5 amps maximum per point 2 amps maximum per common
Output Characteristics	
Inrush Current	4.78 amps for 10 ms
Output Voltage Drop	1 volt maximum
Off-state Leakage	1 mA maximum
On Response Time	2 ms maximum
Off Response Time	2 ms maximum
Power Consumption	50 mA (all outputs on) from 5 volt bus on backplane

Refer to Appendix B for product standards and general specifications.

IC693MDL732 Output Module Field Wiring Information

The following figure provides wiring information for connecting user supplied load devices and power source to the 12/24 volt DC positive logic - 0.5 amp output module.

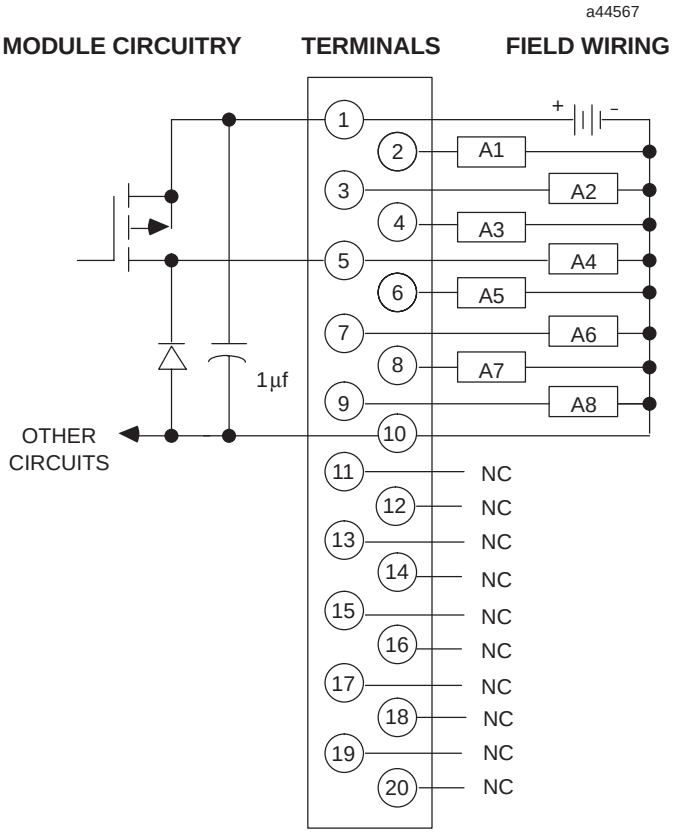

Figure 7-16. IC693MDL732 Output Module Field Wiring

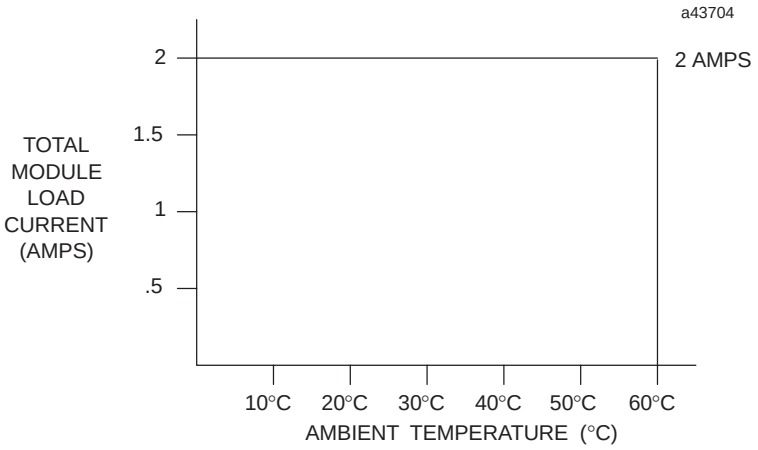

Figure 7-17. Load Current vs. Temperature for IC693MDL732