1756-IB32, 1756-IB32K, 1756-IB32XT

ControlLogix DC (10...31.2V) input module

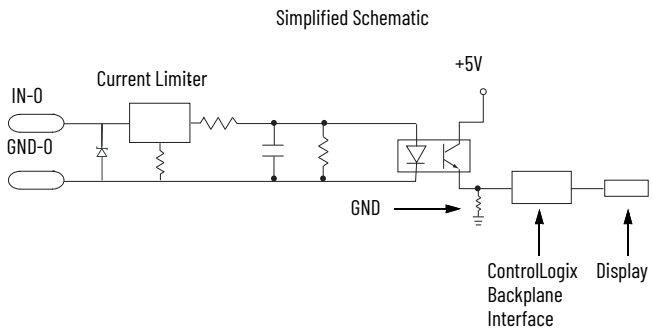

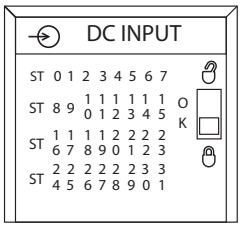

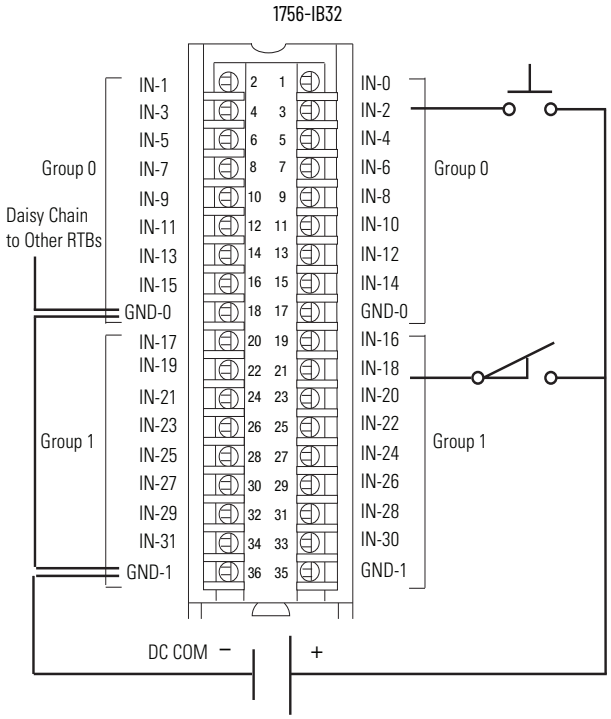

Technical Specifications

Attribute	1756-IB32, 1756-IB32K	1756-IB32XT
Inputs	32 (16 points/group)	
Voltage category	12/24V DC sink	
Operating voltage range	10...31.2V DC	
Input voltage, nom	24V DC	
Input delay time (screw to backplane) Off to On On to Off	Hardware delay: 380 µs max + filter time User-selectable filter time: 0 ms, 1 ms, or 2 ms Hardware delay: 420 µs max + filter time User-selectable filter time: 0 ms, 1 ms, 2 ms, 9 ms, or 18 ms	
Current draw @ 5.1V	120 mA	
Current draw @ 24V	2 mA	
Total backplane power	0.66 W	
Power dissipation, max	6.2 W @ 60 °C (140 °F)	
Thermal dissipation	21.1 BTU/hr @ 60 °C (140 °F)	
Off-state voltage, max	5V	
Off-state current, max	2.27 mA	
On-state current, min	4.8 mA @ 10V DC	
On-state current, max	5.5 mA @ 31.2V DC	
Inrush current, max	250 mA (decaying to < 37% in 22 ms, without activation)	
Input impedance, max	5.67 kΩ @ 31.2V DC	
Cyclic update time	200 µs...750 ms	
Change of state	Software configurable	
Time stamp of inputs	±200 µs	
Isolation voltage	250V (continuous), reinforced insulation type, inputs-to-backplane 250V (continuous), basic insulation type, input group-to-group No isolation between individual group inputs	
Module keying	Electronic, software configurable	

Technical Specifications (Continued)

Attribute	1756-IB32, 1756-IB32K	1756-IB32XT
Removable terminal block	1756-TBCH 1756-TBS6H	1756-TBCHXT 1756-TBS6HXT
RTB keying	User-defined mechanical	
Slot width	1	
Wire category	1 - on signal ports(1)	
Wire size	1756-TBCH	1756-TBCHXT
	Single wire connection: 0.33...2.1 mm^2 (22...14 AWG) solid or stranded copper wire rated at 105 °C (221 °F), or greater, 1.2 mm (3/64 in.) insulation max. Do not wire more than one conductor on any single terminal. Double wire connection: 0.33...1.3 mm^2 (22...16 AWG) solid or stranded copper wire rated at 105 °C (221 °F), or greater, 1.2 mm (3/64 in.) insulation max. Do not wire more than two conductors on any single terminal.	
	1756-TBS6H	1756-TBS6HXT
	Single wire connection: 0.33...2.1 mm^2 (22...14 AWG) solid or stranded shielded copper wire rated at 105 °C (221 °F), or greater, 1.2 mm (3/64 in.) insulation max.	
Terminal block torque specs	1756-TBCH, 1756-TBCHXT 0.5 N•m (4.4 lb•in)	
Enclosure type	None (open-style)	
Temperature code	T4	
Reverse polarity protection	Yes	

(1) Use this conductor category information for planning conductor routing as described in the system-level installation manual. See the Industrial Automation Wiring and Grounding Guidelines, publication 1770-4.1.

Environmental Specifications

Attribute	1756-IB32, 1756-IB32K	1756-IB32XT
Temperature, operating IEC 60068-2-1 (Test Ae, Operating Cold), IEC 60068-2-2 (Test Be, Operating Dry Heat), IEC 60068-2-14 (Test Nb, Operating Thermal Shock)	0...60 °C (32...140 °F)	
Temperature, nonoperating IEC 60068-2-1 (Test Ab, Unpackaged Nonoperating Cold), IEC 60068-2-2 (Test Bb, Unpackaged Nonoperating Dry Heat), IEC 60068-2-14 (Test Na, Unpackaged Nonoperating Thermal Shock)	-40...+85 °C (-40...+185 °F)	
Relative humidity IEC 60068-2-30 (Test dB, Unpackaged Damp Heat)	5...95% noncondensing	
Conformal Coated(1)	Yes	
Corrosive Atmosphere(1) • ASTM B845-97 Method H Accelerated Test (20-Day Exposure)	Severity Level G3(2) per ANSI/ISA 71.04-2013, Airborne Contaminants—Gases Severity Level CX(2)(3) per IEC 60721-3-3:2019, Chemically Active Substances	–
• ASTM B845-97 Method K Accelerated Test (30-Day Exposure) • Plus additional Rockwell Automation proprietary accelerated corrosive environment test protocol for specific industries with sources of gaseous sulfur compounds.	–	Severity Level GX(4)(5) per ANSI/ISA 71.04-2013, Airborne Contaminants—Gases Severity Level CX(4) per IEC 60721-3-3:2019, Chemically Active Substances
Vibration IEC 60068-2-6 (Test Fc, Operating)	2 g @ 10...500 Hz	
Shock, operating IEC 60068-2-27 (Test Ea, Unpackaged Shock)	30 g	
Shock, nonoperating IEC 60068-2-27 (Test Ea, Unpackaged Shock)	50 g	
Emissions	IEC 61000-6-4	
ESD immunity IEC 61000-4-2	6 kV contact discharges 8 kV air discharges	
Radiated RF immunity IEC 61000-4-3	10V/m with 1 kHz sine wave 80% AM from 80...2000 MHz 10V/m with 200 Hz 50% Pulse 100% AM @ 900 MHz 10V/m with 200 Hz 50% Pulse 100% AM @ 1890 MHz 3V/m with 1 kHz sine wave 80% AM from 2000...2700 MHz	

Environmental Specifications (Continued)

Attribute	1756-IB32, 1756-IB32K	1756-IB32XT
EFT/B immunity IEC 61000-4-4	±4 kV at 5 kHz on signal ports	
Surge transient immunity IEC 61000-4-5	±1 kV line-line (DM) and ±2 kV line-earth (CM) on signal ports	
Conducted RF immunity IEC 61000-4-6	10V rms with 1 kHz sine wave 80% AM from 150 kHz...80 MHz	

(1) Only applicable to modules that end with a 'K or 'XT'.
(2) The module and the corresponding RTB must remain installed at all times and the RTB door must remain closed, for the product to maintain its corrosive atmosphere rating.
(3) Up to 9.6 microns per year, corrosion rate of copper.
(4) The module and the corresponding RTB must remain installed at all times and the RTB door must remain closed, once the factory packaging seal is broken, for the product to maintain its corrosive atmosphere rating.
(5) Up to 2100 angstroms of film growth per 30 days of copper and/or silver reactivity.

Certifications

Certification[1]	1756-IB32, 1756-IB32K, 1756-IB32XT
cULus	UL Listed Industrial Control Equipment, certified for US and Canada. See UL File E65584. UL Listed for Class I, Division 2 Group A,B,C,D Hazardous Locations, certified for U.S. and Canada. See UL File E194810.
CE	European Union 2014/30/EU EMC Directive, compliant with: • EN 61326-1; Meas./Control/Lab., Industrial Requirements • EN 61000-6-2; Industrial Immunity • EN 61000-6-4; Industrial Emissions • EN 61131-2; Programmable Controllers (Clause 8, Zone A & B) European Union 2014/35/EU LVD, compliant with EN 61131-2; Programmable Controllers (Clause 11)
RCM	Australian Radiocommunications Act, compliant with EN 61000-6-4; Industrial Emissions
Ex	European Union 2014/34/EU ATEX Directive, compliant with: • EN IEC 60079-0: Explosive atmospheres - Part 0: Equipment - General requirements • EN IEC 60079-7: Explosive atmospheres – Part 7: Equipment protection by increased safety "e" • II 3 G Ex ec IIC T4 Gc • UL22ATEX2820X
IECEx	IECEx System, compliant with: • IEC 60079-0: Explosive atmospheres - Part 0: Equipment - General requirements • IEC 60079-7: Explosive atmospheres – Part 7: Equipment protection by increased safety "e" • II 3 G Ex ec IIC T4 Gc • IECEx UL 22.0065X
UKex	In conformity with the following UKex Statutory Instruments and their amendments: • Schedule 1 of the UKEX Regulation 2016 No. 1107 • Equipment protection by increased safety "e", reference certificate number UL22UKEX2602X • Zone 2 classification according to UKEX Regulation 2016 No. 1107
FM	FM Approved Equipment for use in Class I Division 2 Group A,B,C,D Hazardous Locations
KC	Korean Registration of Broadcasting and Communications Equipment, compliant with Article 58-2 of Radio Waves Act, Clause 3
UKCA	In conformity with the following UK Statutory Instruments and their amendments: • 2016 No. 1091, Electromagnetic Compatibility Regulations • 2016 No. 1101, Electrical Equipment (Safety) Regulations • 2016 No. 1107, Equipment and Protective Systems Intended for Use in Potentially Explosive Atmospheres Regulations • 2012 No. 3032, Restriction of the Use of Certain Hazardous Substances in Electrical and Electronic Equipment
Morocco	In conformity with the following regulations: • Arrêté ministériel n° 6404-15 du 1 er muharram 1437 (15 octobre 2015) Équipements électriques destinés à être utilisés sous certaines limites de tension • Arrêté ministériel n° 6404-15 du 29 ramadan 1436 (16 juillet 2015) Compatibilité électromagnétique des équipements
CCC	CCC 2020122309111998 CNCA-C23-01 强制性产品认证实施规则 防爆电气 CNCA-C23-01 CCC Implementation Rule Explosion-Proof Electrical Products

(1) When product is marked. See the Product Certification link at rok.auto/certifications for Declarations of Conformity, Certificates, and other certification details.

1756-IC16

ControlLogix DC (30...60V) input module

Simplified Schematic

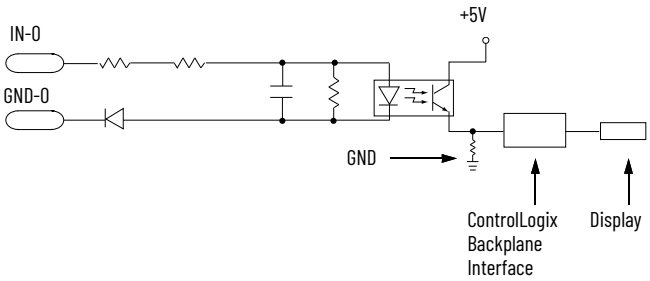

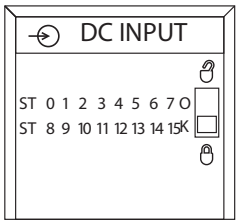
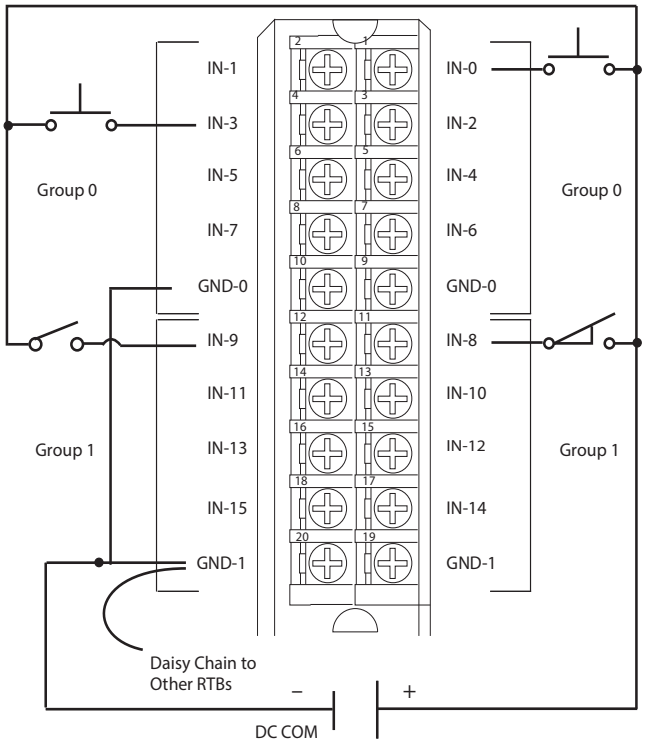
1756-IC16