MANUFACTURER DOCUMENT PACKAGE

Manufacturer's Manual

Selected official pages for procurement and maintenance review

PRODUCT BRAND

Bently Nevada

PRODUCT MODEL

84661-16

84661-16 - Armored sensor interconnect cable
Selected manufacturer pages; check exact configuration.

OFFICIAL SOURCE

Datasheet 169872 Rev. F; selected official pages

Open current manufacturer source

AMIKON PRODUCT SUPPORT

+86-18020776786 INFO@AMIKON.CN

AMIKONG.COM

Amikon Limited prepared this independent reference package. Selected manufacturer pages follow with their original content and pagination visible.

Cable Part Numbers

Part number	Description
† NOTE: Use 'AA' in the part numbers below to specify the length (in feet) of the cable you want to order.	
02173034	Splash-Proof Interconnect Cable Recommended for high electromagnetic noise environment and European Conformance (CE). Shielded 0.382 mm2 (22 AWG) cable with a splash proof boot over a female connector at the transducer end and flush cut at the monitor end. Temperature range -55 to 125°C (-67 to 257°F). See Graphs and Figures.
CB2W100-AAA†	Splash-Proof Interconnect Cable Shielded 0.382 mm2 (22 AWG) cable with splash proof over molded boot, blunt cut at the monitor end. Temperature range -50 to 200°C (-58 to 392°F). See Graphs and Figures. Standard lengths: 01515 ft (4.5 m) 03232 ft (9.8 m) 06464 ft (19.5 m) 112112 ft (34.1 m) 125125 ft (38.1 m) 150150 ft (45.7 m) 200200 ft (61.09 m)
9571-AA†	Standard Interconnect Cable Shielded 0.382 mm2 (22 AWG) cable with a moisture resistant female connector at the transducer end and ring lugs at the monitor end. Temperature range -29 to 121°C (-20 to 250°F). See Graphs and Figures. Minimum length 2 ft (0.60 m); maximum length 99 ft (30 m).
84661-AA†	Standard Armored Interconnect Cable Stainless steel armor over shielded 0.382 mm2 (22 AWG) cable with a moisture resistant female connector at the transducer end and ring lugs at the monitor end. Temperature range -29 to 121°C (-20 to 250°F). See Graphs and Figures. Minimum length 3 ft (0.91 m); maximum length 96 ft (29 m).
89477-AA†	Right Angle Interconnect Cable Shielded 0.963 mm2 (18 AWG) cable with a moisture resistant right angle female connector at the transducer end and ring lugs at the monitor end. Temperature range -29 to 121°C (-20 to 250°F). See Graphs and Figures.

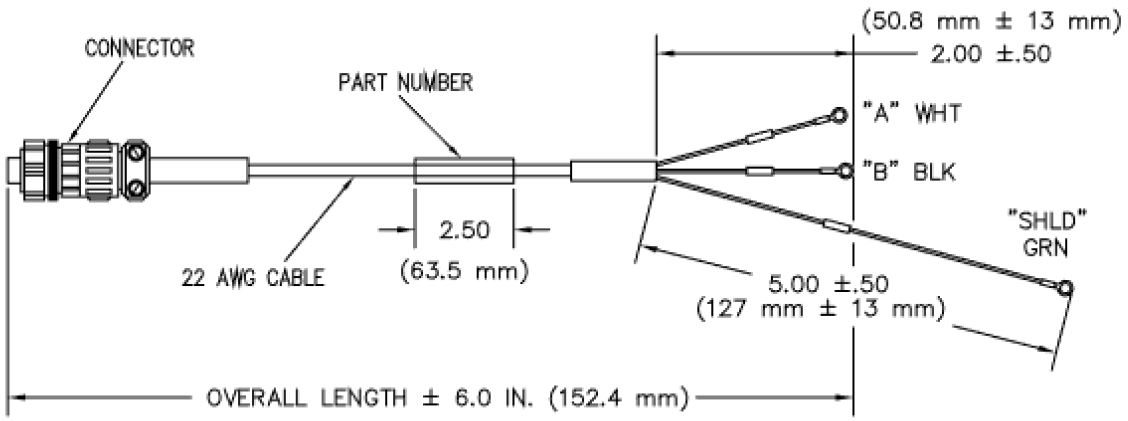

Figure 7: Standard Interconnect Cable

(For available cable lengths and part numbers, See Interconnection Cables on page 3.

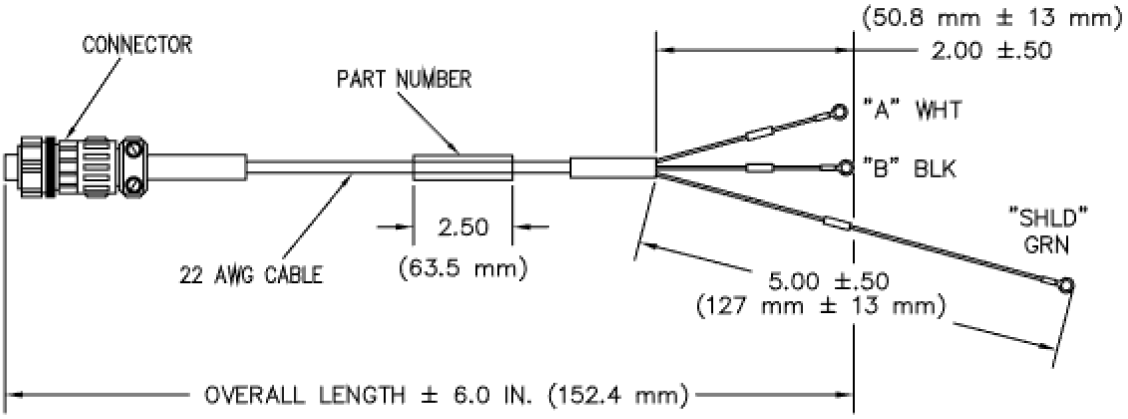

Figure 8: Standard Armored Interconnect Cable

(For available cable lengths and part numbers, See Interconnection Cables on page 3.