FIELD INSTALLATION QUICK GUIDE

Installation Instructions

31000-28-10-00-175-01-02

Radial proximity probe housing assembly

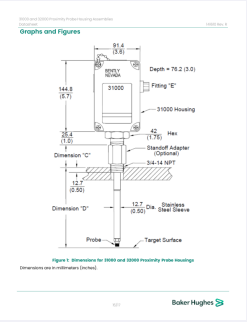

PRODUCT	31000-28-10-00-175-01-02
FAMILY	31000 and 32000 proximity probe housing assemblies
FUNCTION	Radial proximity probe housing assembly
SOURCE	Bently Nevada 31000/32000 probe housings datasheet 141610 Rev. R

01 OFFICIAL MOUNTING AND WIRING

- Install the outer sleeve into the machine case, insert the probe sleeve, and adjust the probe gap (p. 16, steps 1-2).
- Disconnect the probe cable and fit the housing over the outer sleeve (p. 16, step 3).
- Slide the retainer under the retaining nut and tighten the nut; the recommended torque is 29.4 N-m (pp. 16, 4).
- Reconnect the probe cable and Connector Protector, then place the cover and tighten its captive screws (p. 16, steps 5-6).
- Where hole plugs are used, tighten their nuts to 0.5 N-m (p. 16, step 7).

AMIKON PRODUCT SUPPORT

+86-18020776786 INFO@AMIKON.CN **AMIKONG.COM**

All 4 holes in housing base, 1 per side, will accept sleeve or conduit fittings and cable glands.
Fittings are supplied with housing depending on English, metric or DIN type.
Hole plugs are provided to seal unused holes.

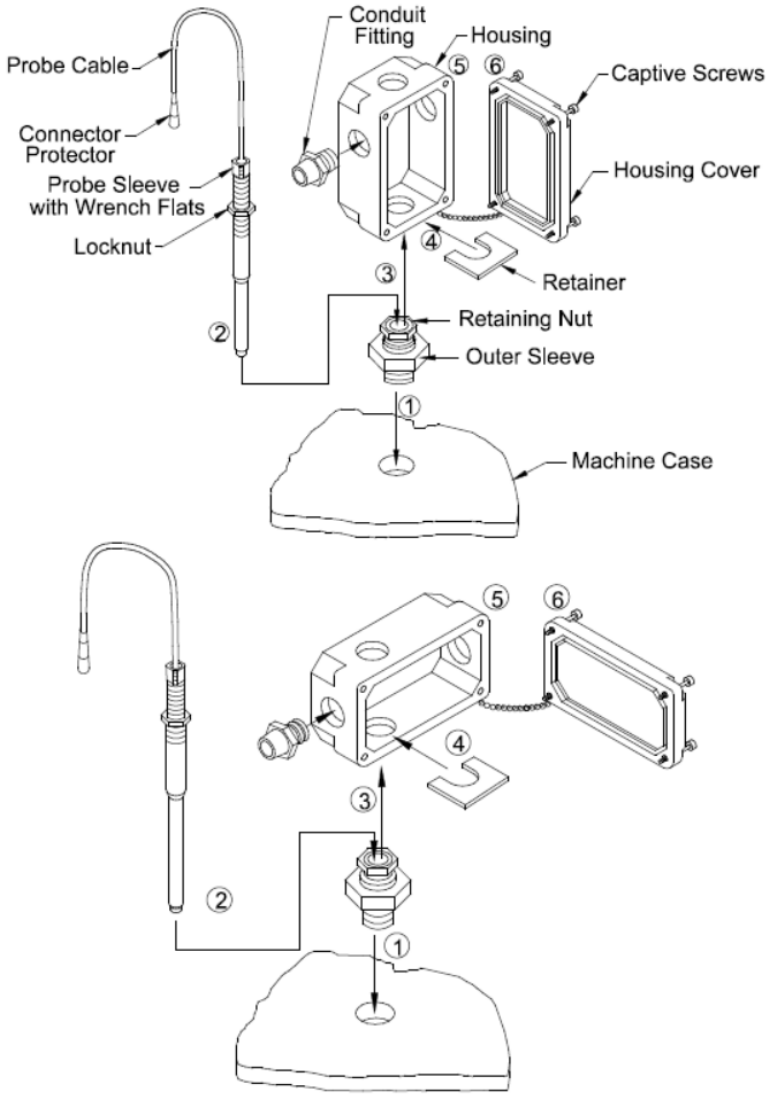

Installation Procedures

1. Install outer sleeve into machine case.
2. Insert probe sleeve and adjust probe gap.
3. Disconnect probe cable and fit housing over outer sleeve.
4. Slide retainer under retaining nut. Tighten nut.
5. Re-connect probe cable and Connector Protector.
6. Place housing cover on housing and tighten captive screws.
7. If hole plugs are used, tighten hole plug nuts to 0.5 N-m (5 in-lbs).

Figure 2: Vertical and Horizontal Profile Views of the 31000 and 32000 Proximity Probe Housings

Graphs and Figures

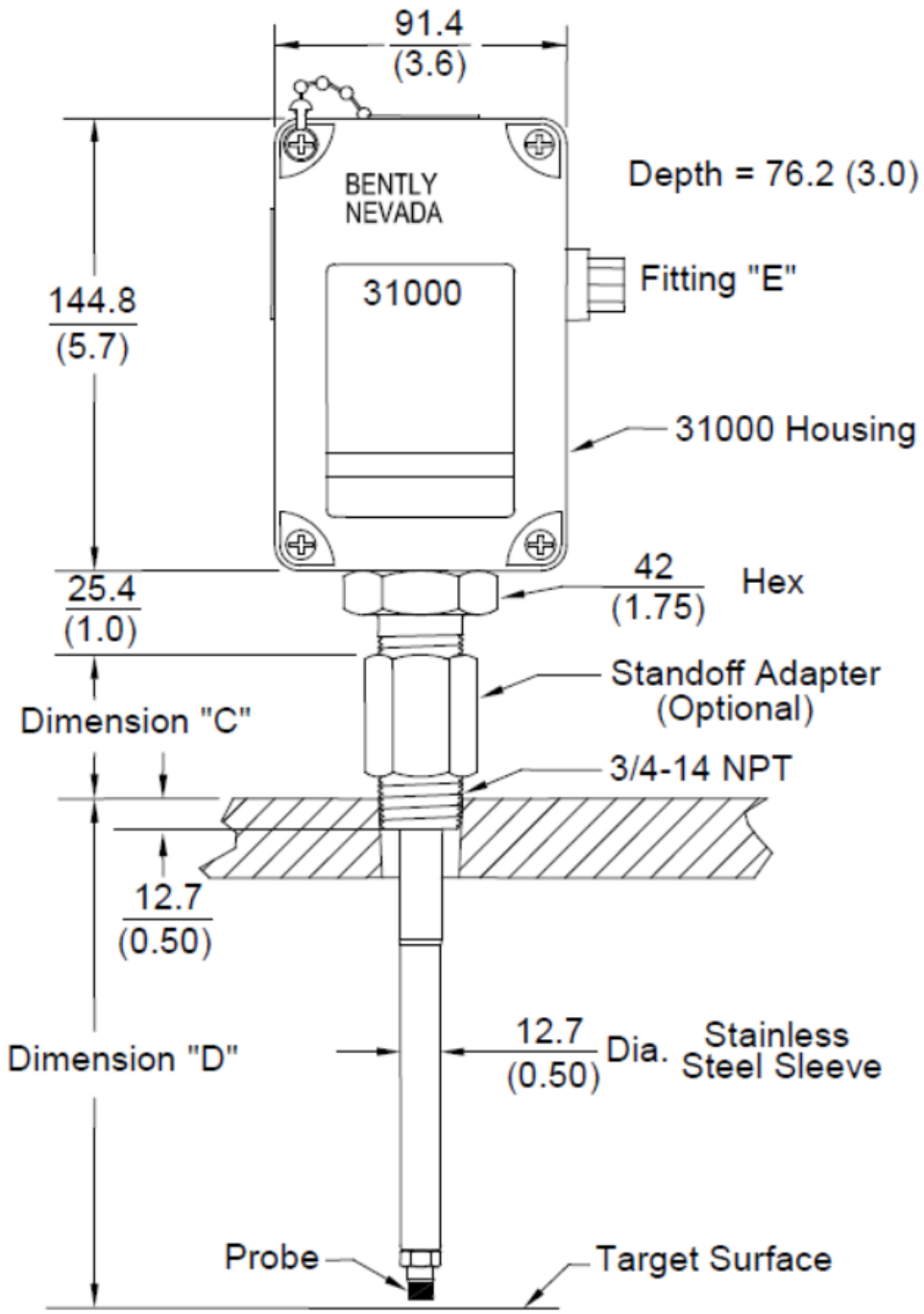

Figure 1: Dimensions for 31000 and 32000 Proximity Probe Housings

Dimensions are in millimeters (inches).

O-Ring Material	Neoprene
Recommended Torque(retaining nut)	29.4 N·m (260 in·lb)
Housing Strength (typical)	Outer sleeve was mounted on a test stand with its axis parallel to horizontal and the housing mounted on the outer sleeve through an end hole. The housing supported 912 N (205 lb) placed approximately 38 mm (1.5 inches) from the unsupported end with the cover fastened in place and grounding liner installed.
Housing Impact Strength	Certified by BASEEFA to withstand two separate 4 Joule (3.0 ft·lb) impacts at -39°C (-38°F) and at 115°C (239°F). Samples of the housing and cover were verified by CSA to withstand a 7 Joule (5.2 ft·lb) impact at ambient room temperature.
Weight	1.2 kg (2.6 lb) typical

Ordering Information

For the detailed listing of country and product-specific approvals, refer to the *Approvals Quick Reference Guide (108M1756)*.

For additional technical documentation, please log in to bntechsupport.com and access the Bently Nevada Media Library.

Table 1: Maximum "C" Option plus "D" Option for different "B" Options (probe cable length)

Probe Cable Length	Maximum C plus D
0.5 meter	394 mm (15.5 in)
1.0 meter	760 mm (30.0 in)

Table 2: Maximum "C" Option plus "D" Option for different "B" Options (probe cable length) where P/N and S/N Label on Probe Cable is visible outside of probe sleeve

Probe Cable Length	Maximum C plus D with Visible P/N and S/N Label
0.5 meter	64 mm (2.5 in)
1.0 meter	483 mm (19.0 in)

Conduit fittings are necessary when hardline conduit or metal tubing is brought into the housing. Flexible conduit should be ordered with integral 3/4-14 NPT fittings and do not require additional conduit fittings with the housing. If using flexible conduit, order the "E" = 00 option.

English Proximity Probe Housing Assemblies

31000 - AA-BB-CC-DDD-EE-FF

A: Probe with Connector	
00	Probe not required
16	3300 XL 8 mm probe
26	3300 XL NSv probe
27	3300 XL NSv probe, multiple approvals
28	3300 XL 8 mm probe, multiple approvals
29	3300 XL 8 mm probe, with connector protector
30	3300 XL 8 mm probe, with connector protector, multiple approvals
31	3300 XL NSv probe with connector protector
32	3300 XL NSv probe with connector protector, multiple approvals
33	3300 XL 11 mm probe
34	3300 XL 11 mm probe, multiple approvals
35	3300 XL 11 mm probe with connector protector
36	3300 XL 11 mm probe with connector protector, multiple approvals
B: Probe Cable Length	
00	Probe cable not required (Option A must also be 00)
05	0.5 m (20 in)
10	1.0 m (39 in)
C: Standoff Adapter Length (Option C Dimension)	

	Must be ordered if Standoff Adapter Length option is not 00.
15	Minimum length 1.5 in (38 mm)
75	Maximum length 7.5 in (191 mm)
	Recommendation Order in increments of 0.5 in (13 mm)
	Examples 1.5 in (38 mm) = **15** No standoff adapter = **00**
D: Probe Penetration Option (Option D Dimension)	
10	Minimum length 1.0 in (25.4 mm)
	Recommendation Order in increments of 0.1 in (3 mm)
	Examples No probe sleeve = **000** 3.7 in (94 mm) = **037** 22.4 in (569 mm) = **224**

"C" plus "D" dimensions greater than 12 in (305 mm) require additional sleeve support near the probe to prevent resonance from occurring. Sleeve adjustment range of Probe Penetration Option "D" is ±0.5 in (13 mm).

For probe penetration lengths between 1.0 and 2.0 inches, it may be necessary to counter bore the machine case to reduce probe side view or rear view effects.

E: Fittings	
00	Without fittings
01	One 3/4-14 NPT fitting, two plugs.
02	Two 3/4-14 NPT fittings, one plug.
03	Two plugs, one 3/4-14 NPT fitting One 3/4-14 to 1/2-14 NPT SST reducer One cable seal grip with grommets for the following cable sizes: • 1/8 to 3/16 inches • 1/4 to 5/16 inches • 5/16 to 3/8 inches
06	One 3/4-14 NPT fitting One 3/4-14 NPT to 1/2-14 NPR SST reducer Two plugs
F: Mounting Thread Option	
00	No outer sleeve, retainer, or retaining nut
02	3/4-14 NPT (Required if ordering Standoff Adapter Option).
05	7/8-14 UNF 2A