MANUFACTURER DOCUMENT PACKAGE

Manufacturer's Manual

Reference package for procurement and maintenance review

ALLEN-BRADLEY

2097-V34PR5-LM

ETHERNET/IP INTEGRATED MOTION SERVO DRIVE

Used with the applicable Kinetix 350 configuration.

REFERENCE PACKAGE

OFFICIAL DOCUMENT

Selected official manufacturer pages follow this cover.

Source: Rockwell Automation 2097-UM002E and KNX-TD005B, Kinetix 350 specifications

Catalog Number Explanation

Kinetix 350 drive catalog numbers and descriptions are listed in these tables.

Table 3 - Kinetix 350 Drives (Single-phase)

Cat. No.	Input Voltage	**Continuous Output Current** A (0-pk)	Features
2097-V31PR0-LM	120V, 1 Ø 240V, 1 Ø	2.8	• 120V Doubler mode • Safe Torque Off
2097-V31PR2-LM		5.7	
2097-V32PR0-LM	240V, 1 Ø	2.8	• Integrated AC line filter • Safe Torque Off
2097-V32PR2-LM		5.7	
2097-V32PR4-LM		11.3	

Table 4 - Kinetix 350 Drives (Single/Three-phase)

Cat. No.	Input Voltage	**Continuous Output Current** A (0-pk)	Features
2097-V33PR1-LM	120V, 1 Ø 240V, 1 Ø 240V, 3 Ø	2.8	Safe Torque Off
2097-V33PR3-LM		5.7	
2097-V33PR5-LM		11.3	
2097-V33PR6-LM		17.0	

Table 5 - Kinetix 350 Drives (Three-phase)

Cat. No.	Input Voltage	**Continuous Output Current** A (0-pk)	Features
2097-V34PR3-LM	480V, 3 Ø	2.8	Safe Torque Off
2097-V34PR5-LM		5.7	
2097-V34PR6-LM		8.5	

Table 6 - Kinetix 350 Drive Accessories

Cat. No.	Drive Components
2097-F*x*	AC line filters
2097-TB1	Terminal block for I/O connector
2097-R*x*	Shunt resistors
2097-PGMR	Memory module programmer
2097-MEM	Memory modules 12 pack

Figure 15 - Sourcing of Digital Inputs

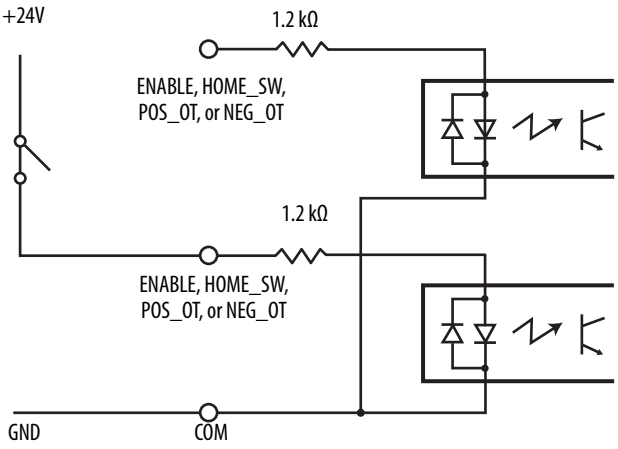

Figure 16 - Sinking of Digital Inputs

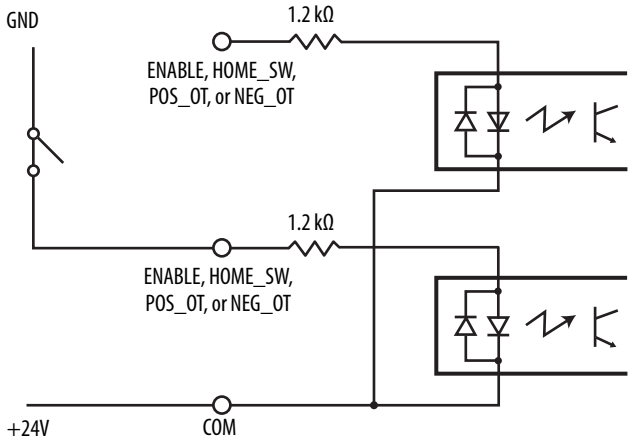

Table 21 - Generic TTL Incremental Specifications

Attribute	Value
TTL incremental encoder support	5V, differential A quad B
Quadrature interpolation	4 counts/square wave period
Differential input voltage (AM, BM, and IM)	1.0…7.0V
DC current draw (AM, BM, and IM)	30 mA, max
Input signal frequency (AM, BM, and IM)	5.0 MHz, max
Edge separation (AM and BM)	42 ns min, between any two edges
Line loss detection (AM and BM)	Average (AM2+ BM2)> constant
Hall inputs (S1, S2, and S3)	Single-ended, TTL, open collector, or none

Figure 23 - Generic TTL Incremental, AM and BM Signals

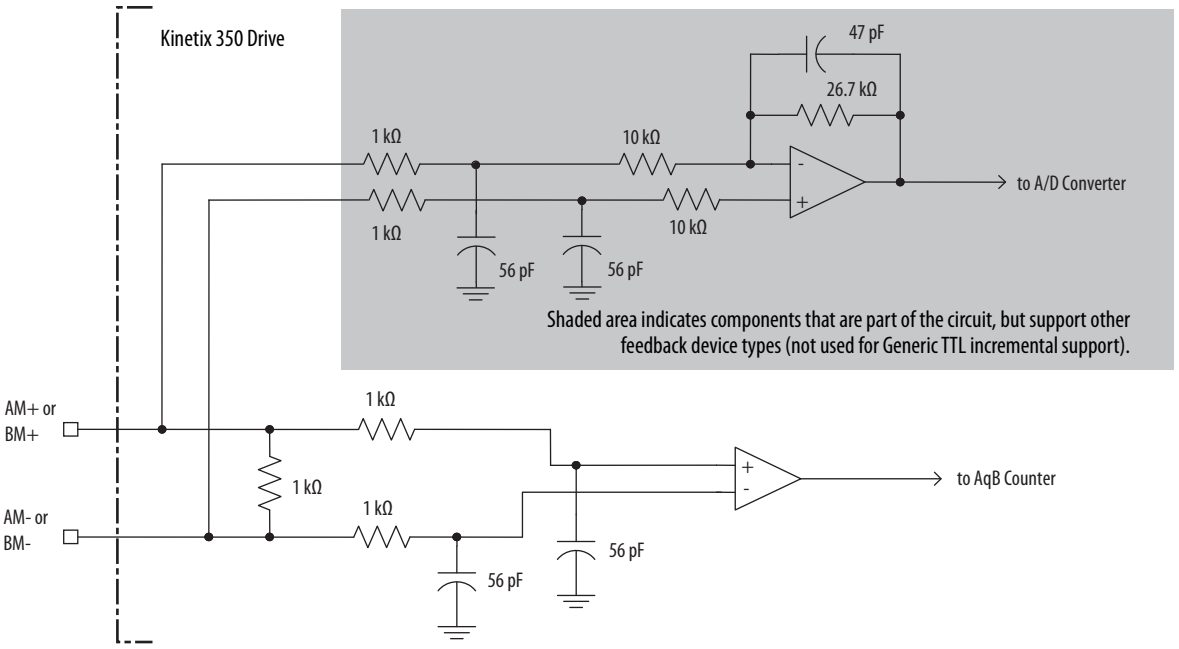

Figure 24 - Generic TTL Interface, IM Signals

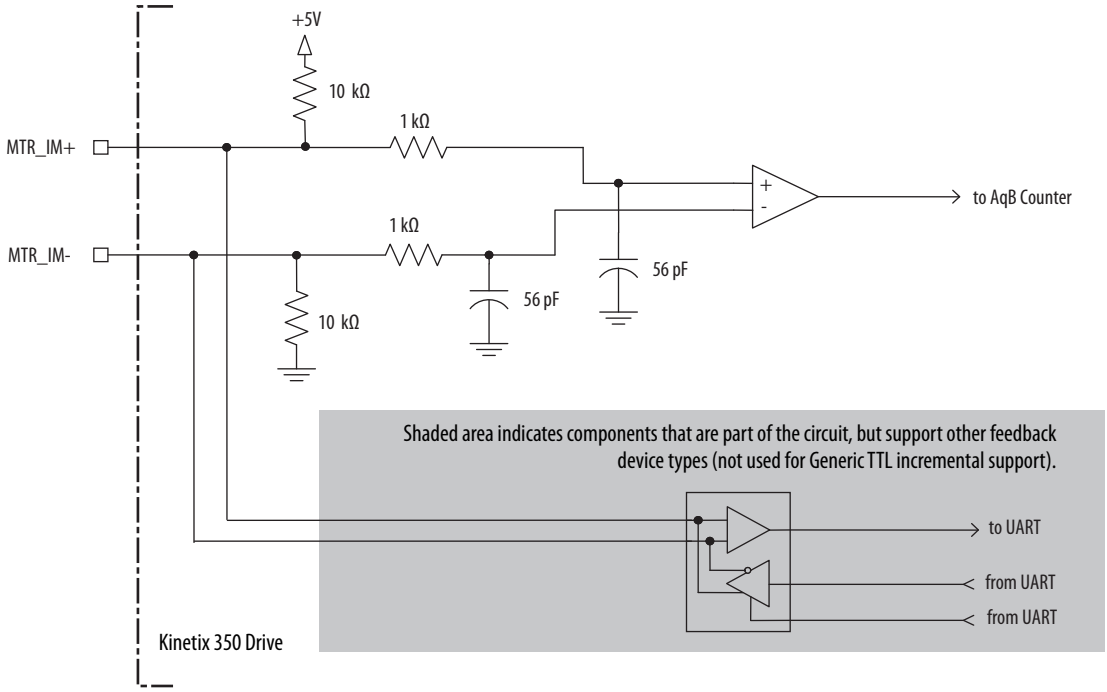

Figure 25 - Generic TTL Interface, S1, S2, or S3 Signals

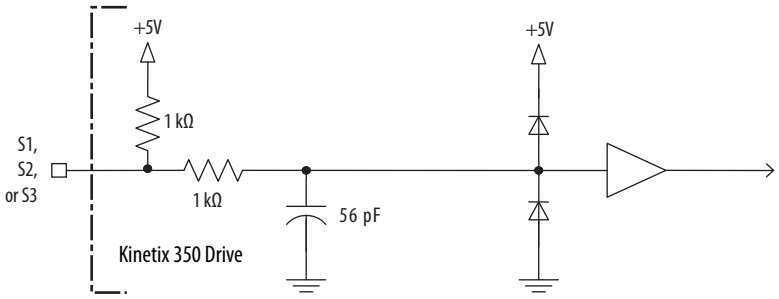

Table 22 - Tamagawa 17-bit Serial Specifications

Attribute	Value
Tamagawa model support	TS5669N124
Protocol	Tamagawa proprietary
Memory support	Programmed with Allen-Bradley motor data
Differential input voltage	1.0…7.0V
Data communication	2.5 Mbps, 8 data bits, no parity
Battery	3.6V, on external to drive in low-profile connector kit

See Figure 22 for the Tamagawa 17-bit serial interface schematic. It is identical to the Stegmann Hiperface (DATA) signals schematic.

Connect the Kinetix 350 Drive System

Topic	Page
Basic Wiring Requirements	49
Grounding Your Kinetix 350 Drive System	56
Power Wiring Requirements	58
Wiring Guidelines	59
Wiring the Kinetix 350 Drive Connectors	60
Apply the Motor Cable Shield Clamp	67
Feedback and I/O Cable Connections	68
Wiring the Feedback and I/O Connectors	70
Shunt Resistor Connections	72
Ethernet Cable Connections	72

Basic Wiring Requirements

This section contains basic information on how to wire the Kinetix® 350 drive.



ATTENTION: Plan the installation of your system so that you can cut, drill, tap, and weld with the system that is removed from the enclosure. Because the system is of the open type construction, be careful to keep any metal debris from falling into it. Metal debris or other foreign matter can become lodged in the circuitry, which can result in damage to components.



SHOCK HAZARD: To avoid a hazard of electrical shock, perform all mounting and wiring of the Bulletin 2097 drive before you apply power. Once power is applied, connector terminals can have voltage present even when not in use.

IMPORTANT This section contains common PWM servo system wiring configurations, size, and practices that can be used in most applications. National Electrical Code, local electrical codes, special operating temperatures, duty cycles, or system configurations take precedence over the values and methods provided.

Recommended Cables

The Motor Power Cable Compatibility table on page 63 and Motor Feedback Cables for Specific Motor/Feedback Combinations table on page 68 show the cables that Rockwell Automation® recommends you use with the Kinetix® 350 drive.

IMPORTANT Factory-made cables are designed to minimize EMI and are recommended over hand-built cables to optimize system performance.

If it is necessary for you to build or modify your own cable, follow these guidelines:

- Connect the cable shield to the connector shells on both ends of the cable with a complete 360° connection.
- Use twisted-pair cable whenever possible. Twist differential signals with each other and twist single-ended signals with the appropriate ground return.

See the Kinetix Motion Control Selection Guide, publication KNX-SG001, for low-profile connector kit, drive-end (mating) connector kit, and motor-end connector kit catalog numbers.

Route Power and Signal Wiring

When you route power and signal wiring on a machine or system, radiated noise from nearby relays, transformers, and other electronic drives can be induced into motor or encoder feedback signals, input/output communication, or other sensitive low voltage signals. Radiated noise can cause system faults and communication anomalies.

See Electrical Noise Reduction on page 22 for examples of routing high and low voltage cables in wireways. See the System Design for Control of Electrical Noise Reference Manual, publication GMC-RM001, for more information.

Determine the Input Power Configuration

This section contains examples of typical single-phase and three-phase facility input power that is wired to single-phase and three-phase Kinetix 350 drives.

The grounded power configuration lets you ground your single-phase or three-phase power at a neutral point. Match your secondary to one of the examples and be certain to include the grounded neutral connection. See Table 68 on page 152 for leakage currents.

Three-phase Power Wired to Three-phase Drives

These examples illustrate grounded three-phase power that is wired to three-phase Kinetix 350 drives when phase-to-phase voltage is within drive specifications.

Figure 27 - Three-phase (400/480V) Power Configuration (Wye Secondary)

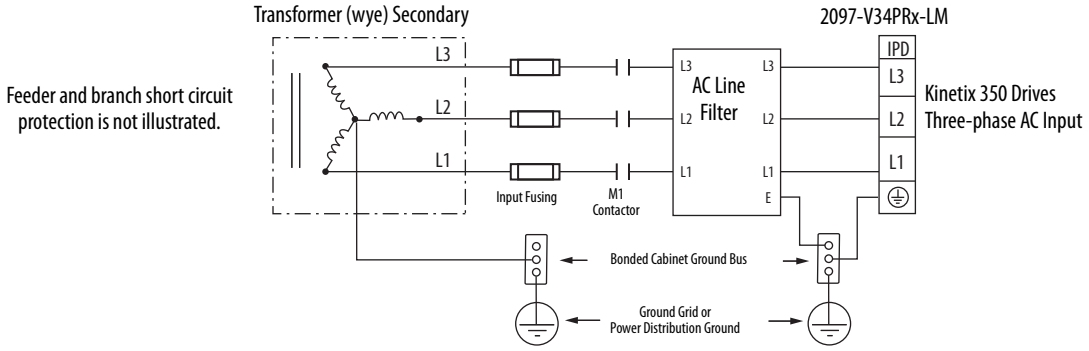

ATTENTION: For the 480V Kinetix 350 drives to meet proper voltage creepage and clearance requirements, each phase voltage to ground must be less than or equal to 300V AC rms. This requirement means that the power system must use a center grounded wye secondary configuration for 400/480V AC mains.

See Appendix C for leakage currents.

Figure 28 - Three-phase (240V) Power Configuration (Delta Secondary)

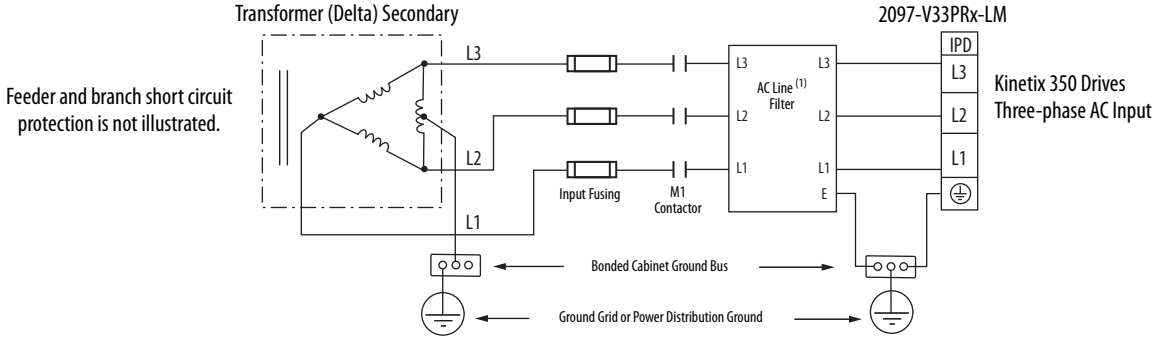

(1) Leakage current from the line filter, in this configuration, typically is higher than a balanced (center ground) configuration.

Figure 29 - Three-phase (240V) Power Configuration (Delta Secondary)

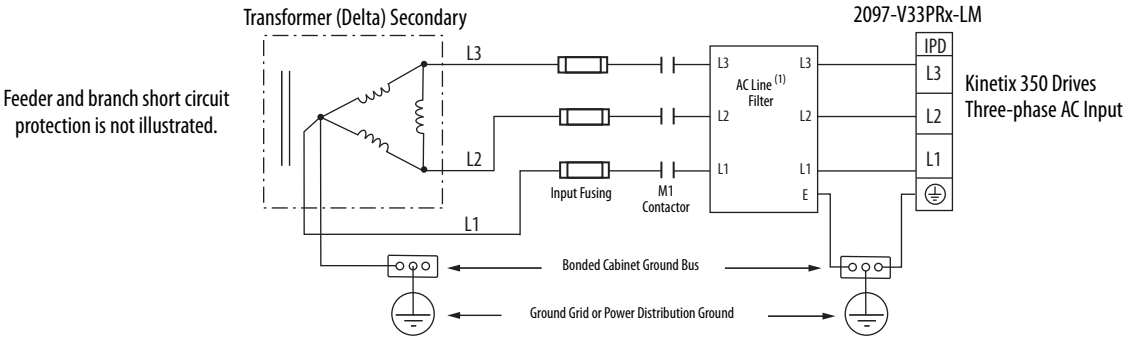

(1) Leakage current from the line filter, in this configuration, typically is higher than a balanced (center ground) configuration.

Kinetix 300/350 Drive (single-phase and three-phase) Power Specifications

Attribute	2097-V33PR1 2097-V33PR1-LM	2097-V33PR3 2097-V33PR3-LM	2097-V33PR5 2097-V33PR5-LM	2097-V33PR6 2097-V33PR6-LM
AC input voltage	80…132V rms single-phase (120V nom) 80…264V rms single-phase (240V nom) 80…264V rms three-phase (240V nom)			
AC input frequency	48…62 Hz			
Main AC input current (1) Nom (rms) 120/240V input, single-phase Max inrush (0-pk) 120/240V input Nom (rms) 240V input, three-phase Max inrush (0-pk) 240V input	 5.0 A 68.0 A 3.0 A 136 A	 8.6 A 1.15 A 5.0A 2.3 A	 15.0 A 1.15 A 8.7A 2.3 A	 24.0 A 5.65 A 13.9 A 11.3 A
Integrated AC line filter	No	No	No	No
Control power back-up input voltage	20…26V DC			
Control power back-up input current Nom Max inrush (0-pk)	 500 mA 30 A			
Continuous output current (rms)	2.0 A	4.0 A	8.0 A	12.0 A
Continuous output current (0-pk)	2.8 A	5.7 A	11.3 A	17.0 A
Peak output current (rms) (2)	6.0 A	12.0 A	24.0 A	36.0 A
Peak output current (0-pk)	8.5 A	17.0 A	33.9 A	50.9 A
Continuous power output (3) @ 240V nom	0.50 kW	1.00 kW	2.00 kW	3.00 kW
Shunt on	390V DC			
Shunt off	375V DC			
Overvoltage	430V DC			
Short-circuit current rating	100,000 A (rms) symmetrical			

(1) Kinetix 300/350 drive modules are limited to 1 AC mains power cycling per every 2 minutes.
(2) Peak RMS current allowed for up to 2 seconds with a 50% duty cycle.
(3) Nominal continuous power output (kW) applies to 240V AC drives. Value is approximately one-half of this kW rating when using 120V AC.

Kinetix 300/350 Drive (three-phase) Power Specifications

Attribute	2097-V34PR3 2097-V34PR3-LM	2097-V34PR5 2097-V34PR5-LM	2097-V34PR6 2097-V34PR6-LM
AC input voltage	320…528V rms three-phase (480V nom)		
AC input frequency	48…62 Hz		
Main AC input current (1) Nom (rms) Max inrush (0-pk)	 2.7 A 4.5 A	 5.5 A 4.5 A	 7.9 A 22.6 A
Integrated AC line filter	No	No	No
Control power back-up input voltage	20…26V DC		
Control power back-up input current Nom Max inrush (0-pk)	 500 mA 30 A		
Continuous output current (rms)	2.0 A	4.0 A	6.0 A
Continuous output current (0-pk)	2.8 A	5.7 A	8.5 A
Peak output current (rms) (2)	6.0 A	12.0 A	18.0 A
Peak output current (0-pk)	8.5 A	17.0 A	25.5 A
Continuous power output @ 480V nom	1.00 kW	2.00 kW	3.00 kW
Shunt on	780V DC		
Shunt off	750V DC		
Overvoltage	850V DC		
Short-circuit current rating	100,000 A (rms) symmetrical		

(1) Kinetix 300/350 drive modules are limited to 1 AC mains power cycling per every 2 minutes.
(2) Peak RMS current allowed for up to 2 seconds with a 50% duty cycle.