MANUFACTURER DOCUMENT PACKAGE

Manufacturer's Manual

Reference package for procurement and maintenance review

ABB

SDCS-COM-81 3ADT314900R1502

OPTICAL DDCS COMMUNICATION BOARD

Used with the applicable DCS800 SDCS-COM-81 DDCS configuration.

REFERENCE PACKAGE

OFFICIAL DOCUMENT

Selected official manufacturer pages follow this cover.

Source: ABB DCS800 Hardware manual 3ADW000194R0811, pp.82 to 84

Interface board SDCS-COM-8

This board is used together with a DCS800 and provides DDCS communication.

The board is equipped with four optical channels (max. data transmission speed is 4 Mb for each optical channel):

- **Channel 0** is used for communication with the overriding control (e.g. FCI, AC 800M)
- **Channel 1** is used for the I/O Module Adapter AIMA-01, FEA-01
- **Channel 2** is used for master - follower
- **Channel 3** is prepared to connect DriveWindow or IBA interface

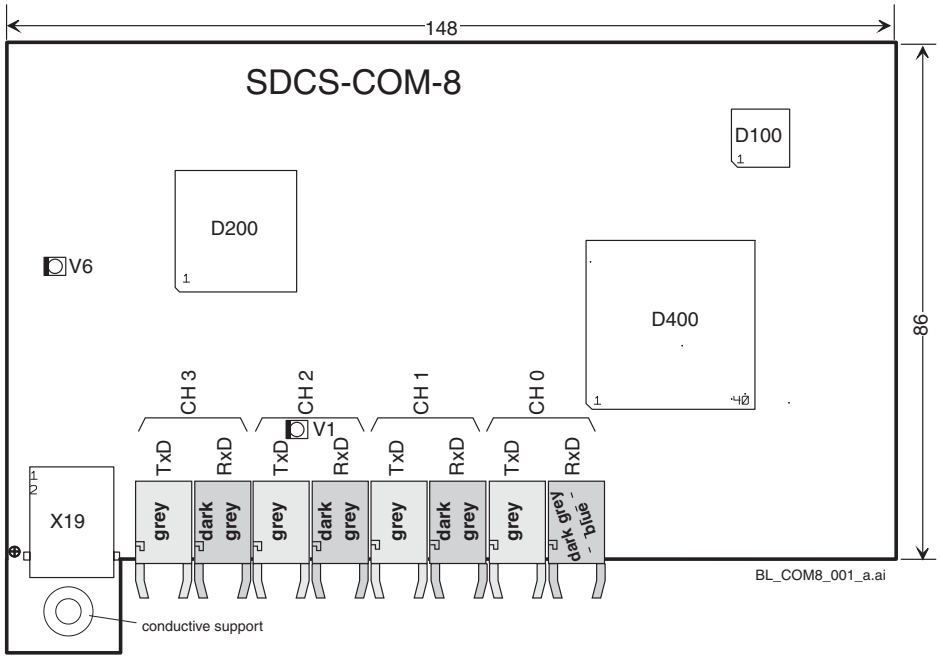

Explanation of the SDCS-COM-8 LEDs

LED	Color	Meaning
V6	Green	5 V supply ok
V1	Red	Blinking: boot procedure Permanent: fault

Type	Revision	Optical components				Channel 0 used for	Max. driver current		Cunductive support
		Ch 0 PLC	Ch 1 I/O	Ch 2 M/F	Ch 3 DW				
SDCS-COM-81	G - I	10 Mb	5 Mb	10 Mb	10 Mb	ABB PLCs	Ch 0, 2, 3	50 mA	x
SDCS-COM-82	G - I	5 Mb	5 Mb	10 Mb	10 Mb	N-type fieldbus adapters	Ch 2, 3	50 mA	x
SDCS-COM-81	K and higher	10 Mb	10 Mb	10 Mb	10 Mb	ABB PLCs	Ch 0 - 3	50 mA	x
SDCS-COM-82	K and higher	5 Mb	10 Mb	10 Mb	10 Mb	N-type fieldbus adapters	Ch 1 - 3	50 mA	x

Color of optical components:
5 Mb -> blue driver current maximum 30 mA
10 Mb -> dark grey driver current maximum 50 mA

Remark:
Only channels with the same hardware components (e.g. 10 Mb) are allowed to be connected together.

Ch2 master-follower connection

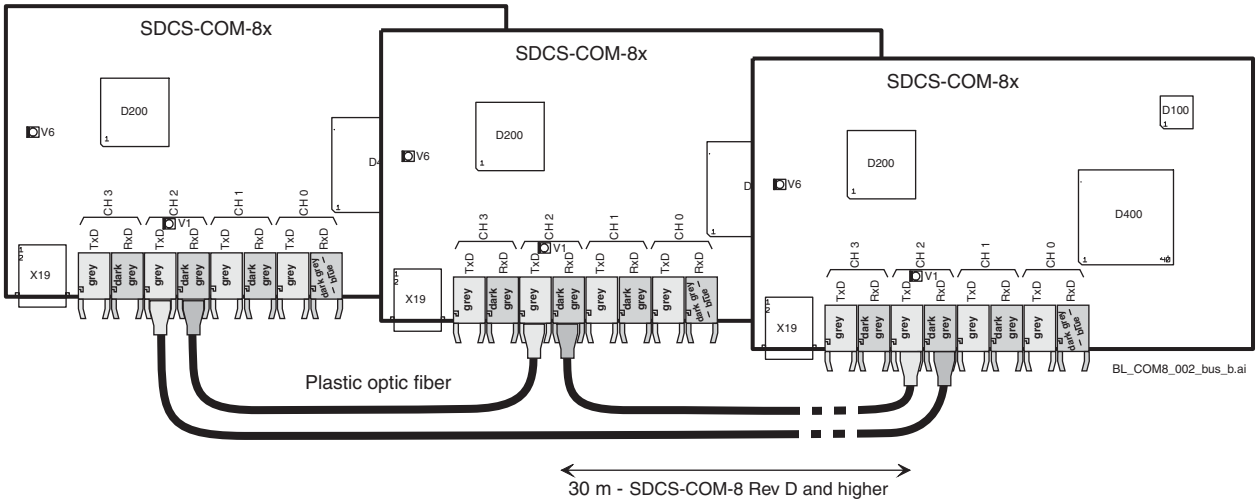

Ch0 DriveBus connection to Advant Controller (star)

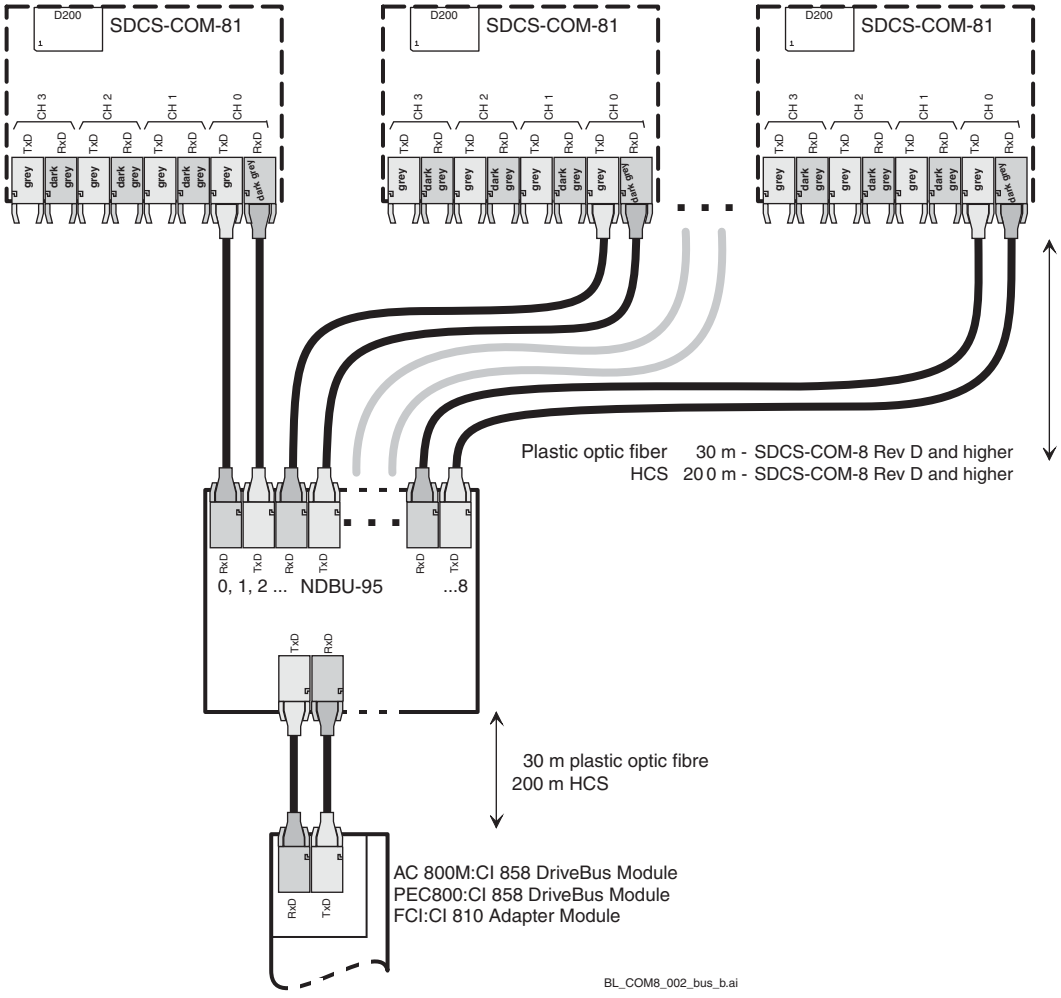

Ch0 connection to overriding control (N-type fieldbus adapter)

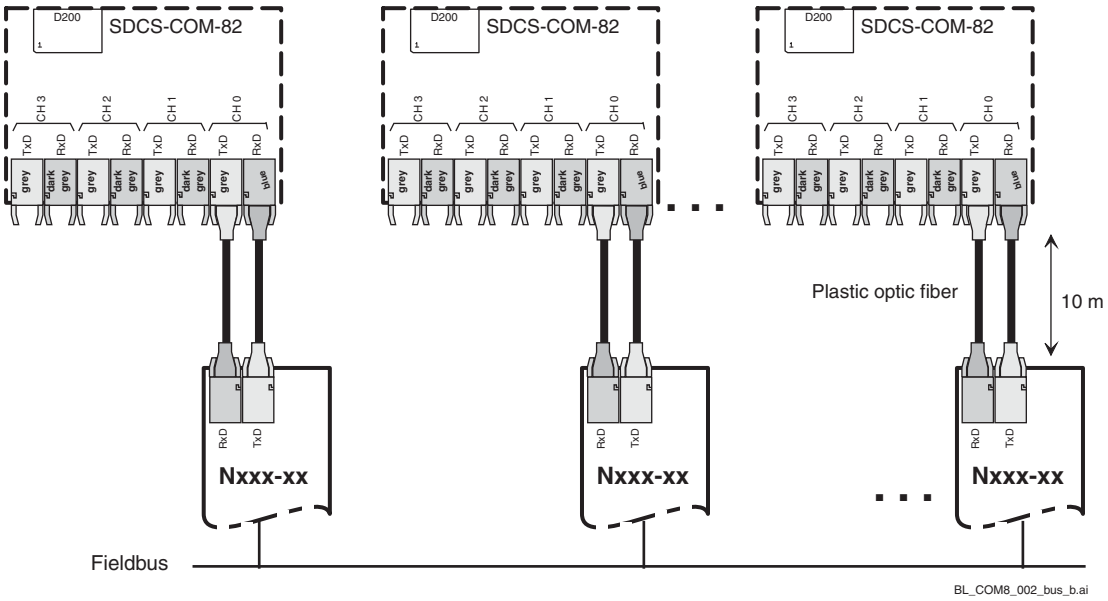

Ch3 ring connection to DriveWindow

