MANUFACTURER DOCUMENT PACKAGE

Manufacturer's Manual

Reference package for procurement and maintenance review

SIEMENS

6ES7151-3AA23-0AB0

PROFINET STATION INTERFACE MODULE

Used with the applicable SIMATIC ET 200S IM151-3 PN ST configuration.

REFERENCE PACKAGE

OFFICIAL DOCUMENT

Selected official manufacturer pages follow this cover.

Source: Siemens IM151-3 PN manual, A5E01638907-04, 08/2010; applies from firmware V7.0

SIEMENS

SIMATIC

ET 200S distributed I/O Interface module IM151-3 PN (6ES7151-3AA23-0AB0)

Manual

Preface

Properties 1

Parameters 2

Functions 3

Interrupt, error, and system messages 4

Response times 5

08/2010
A5E01638907-04

Preface

Preface

Purpose of the manual

This manual supplements the *ET 200S Distributed I/O System* Operating Instructions. General functions of the ET 200S are described in the SIMATIC Distributed I/O System ET 200S (http://support.automation.siemens.com/WW/view/en/1144348) Operating Instructions.

The information in this document along with the operating instructions enables you to commission the ET 200S.

Basic knowledge requirements

To understand these operating instructions you should have general knowledge of automation engineering.

Scope of the manual

The manual applies to this ET 200S module. It describes the components that are valid at the time of publication.

The manual is valid for the IM151-3 PN(6ES7151-3AA23-0AB0) as of firmware version V7.0.

Changes since the previous version

The following changes have been implemented compared to the IM151-3 PN(6ES7151-3AA23-0AB0), Manual, Edition 03/2009 with the number A5E01638906-02.

- Shared Device
- Media redundancy
- Option handling
- LED display of the configuration and parameter assignment errors

Recycling and disposal

Thanks to the fact that it is low in contaminants, this ET 200S module is recyclable. For environmentally compliant recycling and disposal of your electronic waste, please contact a company certified for the disposal of electronic waste.

Media redundancy

Function for ensuring the network and system availability. Redundant transmission links (ring topology) ensure that an alternative communication path is made available if a transmission link fails.

For additional information, refer to the STEP 7 online help and the PROFINET System Description (http://support.automation.siemens.com/WW/view/en/19292127) manual.

Shared Device

IO device that makes its data available to several IO controllers.

The function Shared Device is not available with the IRT option "high flexibility".

Note

Note that the power and electronics modules of a potential group have to be assigned to the same IO controller so that a load voltage failure can be diagnosed.

For additional information, refer to the STEP 7 online help and the PROFINET System Description (http://support.automation.siemens.com/WW/view/en/19292127) manual.

Option handling

Option handling enables you to set up your automation system for future expansions or options. Option handling means that you configure the planned maximum configuration of your automation system in advance and can vary later depending on the user program. Option handling exists with and without RESERVE modules and adding options.

For additional information, refer to the sections Option handling (Page 24) in the STEP 7 online help and the PROFINET System Description (http://support.automation.siemens.com/WW/view/en/19292127) manual.

Configuring

You configure the interface module IM151-3 PN with *STEP 7* V5.4 SP 4.

Limitations for operation of the modules with IM151-3 PN

The following modules cannot be used with the IM151-3 PN:

Module	Up to order number	Up to product version
2AO U; HIGH FEATURE	6ES7135-4LB01-0AB0	3
2AO I; HIGH FEATURE	6ES7135-4MB01-0AB0	3
1SI serial interface module	6ES7138-4DF00-0AB0	4
Modbus/USS serial interface module	6ES7138-4DF01-0AB0	4
2PULSE	6ES7138-4DD00-0AB0	6
1Count 24V/100kHz	6ES7138-4DA03-0AB0	-
Motor starter • Direct starter • Reversing starter		 3RK1301-xxxxx-1AA1 3RK1301-xxxxx-1AA1

Pin assignment

The following table shows the pin assignment of the IM151-3 PN interface module for the 24 VDC voltage supply and of the RJ45 interfaces for PROFINET IO:

Table 1- 1 Pin assignment of the IM151-3 PN

View	Signal name		Description
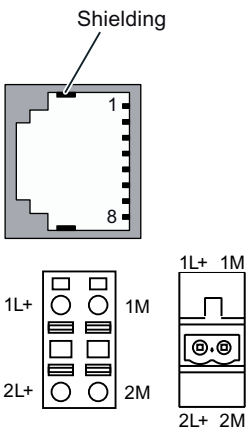	1	TD	Transmit Data +
	2	TD_N	Transmit Data –
	3	RD	Receive Data +
	4	GND	Ground
	5	GND	Ground
	6	RD_N	Receive Data –
	7	GND	Ground
	8	GND	Ground
	1L+		24 V DC
	2L+		24 V DC (for loop through)
	1M		Ground
	2M		Ground (for loop through)

Schematic circuit diagram

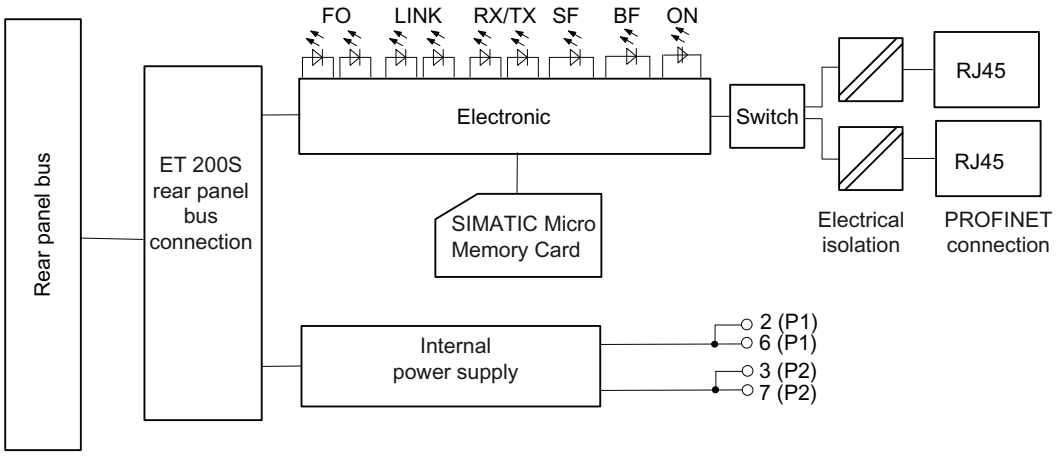

Figure 1-1 Block diagram of the IM151-3 PN interface module

Technical data IM151-3 PN (6ES7151-3AA23-0AB0)

Dimensions and weight	
Dimension B (mm)	60
Weight	Approx. 150 g
Module-specific specifications	
Data transmission rate	• 10 Mbps for Ethernet services • 100 Mbps full duplex for PROFINET IO
Transmission procedure	100BASE-TX
Send cycle	• IRT with the option "high performance" 250 µs to 4 ms in 125-µs increments • RT and IRT with the option "high flexibility": 250 µs, 500 µs, 1 ms
Autonegotiation	Yes
Autocrossing	Yes
Bus protocol	PROFINET IO
Supported Ethernet services	• ping • arp • LLDP • Net diagnostics (SNMP)/MIB-2 • Prioritized startup • Media redundancy • Shared Device
PROFINET interface	2x RJ45
Manufacturer ID (vendor ID)	$002A_H$
Device ID (DeviceID)	0301_H

Voltages, currents, potentials	
Rated supply voltage of the electronic components (1L+)	24 V DC
• Incorrect polarity protection	Yes
• Power failure bypass	Min. 20 ms
Galvanic isolation	
• Between the rear panel bus and electronic components	No
• Between Ethernet and electronic components	Yes
• Between the supply voltage and electronic components	No
Permitted potential difference (to the rail)	75 V DC/60 V AC
Insulation test voltage	500 V DC
Current consumption from rated supply voltage (1L+)	Approx. 200 mA
Power dissipation of the module	Approx. 3.3 W
Status, interrupts, diagnostics	
Interrupts	Yes
Diagnostic function	Yes
• Batch error	Red LED "SF"
• Bus monitoring PROFINET IO	Red "BF" LED
• Monitoring of the supply voltage of the electronics	Green "ON" LED
• Maintenance requirements (maintenance)	yellow "maint" LED
• Existing connection to network	One green LED "LINK" per interface

1.2 SNMP

SNMP

The interface module supports the Ethernet service SNMP. MIB-2 (RFC1213) is supported. R/W objects can be changed using SNMP tools and are stored in the module.

Following replacement with a brand new module, the R/W objects of the interface module are set to the factory settings.

1.3 SIMATIC Micro Memory Card

SIMATIC Micro Memory Card (MMC) as memory medium

A SIMATIC Micro Memory Card is used as a memory medium for the IM 151-3 PN.

A SIMATIC Micro Memory Card with 64 KB is sufficient for storing the name of the device.

An MMC of 4 MB or higher is required for a firmware update.

Position of the module slot for the SIMATIC Micro Memory Card

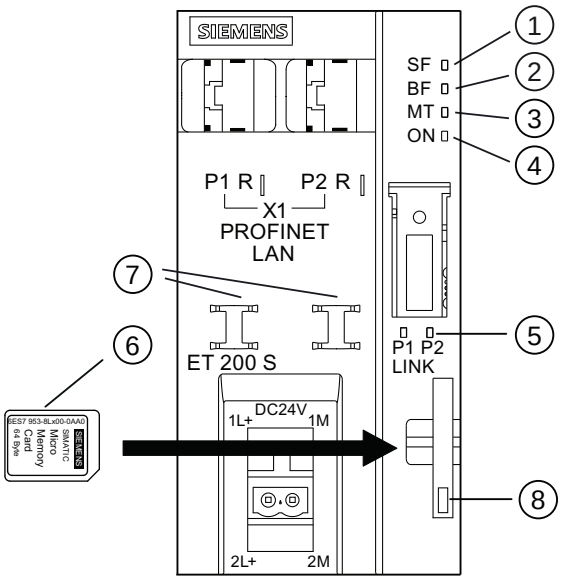

① Group error (red)
② Bus fault (red)
③ Maintenance display (yellow)
④ Supply voltage (green)
⑤ Connection to a switch or IO controller (green)
⑥ SIMATIC Micro Memory Card
⑦ Cable connection
⑧ Locking / unlocking of the Micro Memory Card

Insertion of the SIMATIC Micro Memory Card

Note

You can save **either** process-related data (device names) **or** firmware update data on **one** MMC.