MANUFACTURER DOCUMENT PACKAGE

Manufacturer's Manual

Reference package for procurement and maintenance review

ALLEN-BRADLEY

1794-OF4I

ISOLATED ANALOG OUTPUT MODULE

Used with the applicable FLEX I/O 1794 configuration.

REFERENCE PACKAGE

OFFICIAL DOCUMENT

Selected official manufacturer pages follow this cover.

Source: Rockwell1794-IN037H-EN-P,03/2024;1794-OF4I specifications,pp.8 to 9

Installation Instructions

Original Instructions

Allen-Bradley
by ROCKWELL AUTOMATION

FLEX I/O Isolated Analog Output Module

Catalog Number 1794-OF4I

Topic	Page
Summary of Changes	1
Install the Isolated Analog Output Module	4
Connect Wiring for 1794-TB2, 1794-TB3, 1794-TB3S, 1794-TB3T, and 1794-TB3TS	5
Connect Wiring for the 1794-TBN	5
Status Indicator	8
Specifications	8
Additional Resources	10

Summary of Changes

This publication contains the following new or updated information. This list includes substantive updates only and is not intended to reflect all changes.

Topic	Page
Updated Certifications	10
Added Additional Resources	10

Rockwell Automation

Environment and Enclosure

ATTENTION:
This equipment is intended for use in a Pollution Degree 2 industrial environment, in overvoltage Category II applications (as defined in EN/IEC 60664-1), at altitudes up to 2000 m (6562 ft) without derating.

This equipment is not intended for use in residential environments and may not provide adequate protection to radio communication services in such environments.

This equipment is supplied as open-type equipment for indoor use. It must be mounted within an enclosure that is suitably designed for those specific environmental conditions that is present and appropriately designed to help prevent personal injury resulting from accessibility to live parts. The enclosure must have suitable flame-retardant properties to help prevent or minimize the spread of flame, complying with a flame spread rating of 5VA or be approved for the application if nonmetallic. The interior of the enclosure must be accessible only by the use of a tool. Subsequent sections of this publication may contain more information regarding specific enclosure type ratings that are required to comply with certain product safety certifications.

In addition to this publication, see the following:

- Industrial Automation Wiring and Grounding Guidelines, publication 1770-4.1, for additional installation requirements.
- NEMA Standard 250 and IEC 60529, as applicable, for explanations of the degrees of protection provided by enclosures.

Prevent Electrostatic Discharge

ATTENTION: This equipment is sensitive to electrostatic discharge, which can cause internal damage and affect normal operation. Follow these guidelines when you handle this equipment:

- Touch a grounded object to discharge potential static.
- Wear an approved grounding wriststrap.
- Do not touch connectors or pins on component boards.
- Do not touch circuit components inside the equipment.
- Use a static-safe workstation, if available.
- Store the equipment in appropriate static-safe packaging when not in use.

WARNING: If you insert or remove the module while backplane power is on, an electric arc can occur. This could cause an explosion in hazardous location installations. Be sure that power is removed or the area is nonhazardous before proceeding.

WARNING: If you connect or disconnect wiring while the field side power is on, an electric arc can occur. This could cause an explosion in hazardous location installations. Be sure that power is removed or the area is nonhazardous before proceeding.

ATTENTION: This product is grounded through the DIN rail to chassis ground. Use zinc-plated chromate-passivated steel DIN rail to assure proper grounding. The use of other DIN rail materials (for example, aluminum or plastic) that can corrode, oxidize, or are poor conductors, can result in improper or intermittent grounding. Secure DIN rail to the mounting surface approximately every 200 mm (7.8 in.) and use end-anchors appropriately. Be sure to ground the DIN rail properly. See the Industrial Automation Wiring and Grounding Guidelines, Rockwell Automation publication 1770-4.1, for more information.

ATTENTION: Personnel responsible for the application of safety-related programmable electronic systems (PES) shall be aware of the safety requirements in the application of the system and shall be trained in using the system.

UK and European Hazardous Location Approval

The following applies to products marked Ⓔx II 3 G:

- Are Equipment Group II, Equipment Category 3, and comply with the Essential Health and Safety Requirements relating to the design and construction of such equipment that is given in Schedule 1 of UKEX and Annex II of EU Directive 2014/34/EU. See the UKEX and EU Declaration of Conformity at rok.auto/certifications for details.
- The type of protection is Ex ec IIC T4 Gc according to EN IEC 60079-0:2018, EXPLOSIVE ATMOSPHERES - PART 0: EQUIPMENT - GENERAL REQUIREMENTS, Issue Date 07/2018 and EN IEC 60079-7:2015+A1:2018, Explosive atmospheres. Equipment protection by increased safety "e".
- Comply with Standard EN IEC 60079-0:2018, EXPLOSIVE ATMOSPHERES - PART 0: EQUIPMENT - GENERAL REQUIREMENTS, Issue Date 07/2018, EN IEC 60079-7:2015+A1:2018 Explosive atmospheres. Equipment protection by increased safety "e", reference certificate number DEMKO 14 ATEX 1342501X and UL22UKEX2378X.
- Are intended for use in areas in which explosive atmospheres caused by gases, vapors, mists, or air are unlikely to occur, or are likely to occur only infrequently and for short periods. Such locations correspond to Zone 2 classification according to UKEX regulation 2016 No. 1107 and ATEX directive 2014/34/EU.

IEC Hazardous Location Approval

The following applies to products with IECEx certification:

- Are intended for use in areas in which explosive atmospheres caused by gases, vapors, mists, or air are unlikely to occur, or are likely to occur only infrequently and for short periods. Such locations correspond to Zone 2 classification to IEC 60079-0.
- The type of protection is Ex ec IIC T4 Gc according to IEC 60079-0 and IEC 60079-7.
- Comply with Standards IEC 60079-0, Explosive atmospheres Part 0: Equipment - General requirements, Edition 7, Revision Date 2017, IEC 60079-7, 5.1 Edition revision date 2017, Explosive atmospheres - Part 7: Equipment protection by increased safety "e", reference IECEx certificate number IECEx UL 14.0066X.

WARNING: Special Conditions for Safe Use:
- This equipment is not resistant to sunlight or other sources of UV radiation.
- This equipment shall be mounted in an UKEX/ATEX/IECEx Zone 2 certified enclosure with a minimum ingress protection rating of at least IP54 (in accordance with EN/IEC 60079-0) and used in an environment of not more than Pollution Degree 2 (as defined in EN/IEC 60664-1) when applied in Zone 2 environments. The enclosure must be accessible only by the use of a tool.
- This equipment shall be used within its specified ratings that are defined by Rockwell Automation.
- Transient protection shall be provided that is set at a level not exceeding 140% of the peak-rated voltage value at the supply terminals to the equipment.
- This equipment must be used only with UKEX/ATEX/IECEx certified Rockwell Automation backplanes.
- Secure any external connections that mate to this equipment by using screws, sliding latches, threaded connectors, or other means provided with this product.
- Do not disconnect equipment unless power has been removed or the area is known to be nonhazardous.
- Earthing is accomplished through mounting of modules on rail.

North American Hazardous Location Approval

The Following Information Applies When Operating This Equipment In Hazardous Locations.	**Informations sur l'utilisation de cet équipement en environnements dangereux.**
Products marked "CL I, DIV 2, GP A, B, C, D" are suitable for use in Class I Division 2 Groups A, B, C, D, Hazardous Locations and nonhazardous locations only. Each product is supplied with markings on the rating nameplate indicating the hazardous location temperature code. When combining products within a system, the most adverse temperature code (lowest "T" number) may be used to help determine the overall temperature code of the system. Combinations of equipment in your system are subject to investigation by the local Authority Having Jurisdiction at the time of installation.	Les produits marqués "CL I, DIV 2, GP A, B, C, D" ne conviennent qu'à une utilisation en environnements de Classe I Division 2 Groupes A, B, C, D dangereux et non dangereux. Chaque produit est livré avec des marquages sur sa plaque d'identification qui indiquent le code de température pour les environnements dangereux. Lorsque plusieurs produits sont combinés dans un système, le code de température le plus défavorable (code de température le plus faible) peut être utilisé pour déterminer le code de température global du système. Les combinaisons d'équipements dans le système sont sujettes à inspection par les autorités locales qualifiées au moment de l'installation.
WARNING: **Explosion Hazard –** • Do not disconnect equipment unless power has been removed or the area is known to be nonhazardous. • Do not disconnect connections to this equipment unless power has been removed or the area is known to be nonhazardous. Secure any external connections that mate to this equipment by using screws, sliding latches, threaded connectors, or other means provided with this product. • Substitution of components may impair suitability for Class I Division 2.	**AVERTISSEMENT:** **Risque d'Explosion –** • Couper le courant ou s'assurer que l'environnement est classé non dangereux avant de débrancher l'équipement. • Couper le courant ou s'assurer que l'environnement est classé non dangereux avant de débrancher les connecteurs. Fixer tous les connecteurs externes reliés à cet équipement à l'aide de vis, loquets coulissants, connecteurs filetés ou autres moyens fournis avec ce produit. • La substitution de composants peut rendre cet équipement inadapté à une utilisation en environnement de Classe I Division 2.

Install the Isolated Analog Output Module

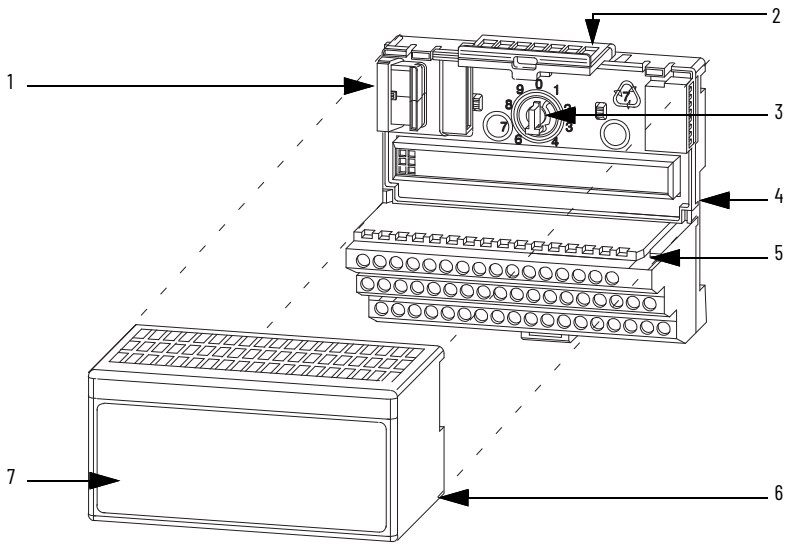

	Description		Description
1	Flexbus connectors	5	Groove
2	Latching mechanism	6	Alignment bar
3	Keyswitch	7	Module
4	Terminal base		

The FLEX™ I/O isolated analog output module mounts on a 1794 terminal base.

1. Rotate the keyswitch (3) on the terminal base (4) clockwise to position 4 as required for this type of module.
2. Make sure that the Flexbus connector (1) is pushed all the way to the left to connect with the neighboring terminal base/adapter. **You cannot install the module unless the connector is fully extended.**
3. Make sure that the pins on the bottom of the module are straight so they align properly with the connector in the terminal base.
4. Position the module (7) with its alignment bar (6) aligned with the groove (5) on the terminal base.
5. Press firmly and evenly to seat the module in the terminal base unit. The module is seated when the latching mechanism (2) is locked into the module.

ATTENTION: If multiple power sources are used, do not exceed the specified isolation voltage.

WARNING: For Class I Division 2 applications, use only Class I Division 2 listed or recognized accessories and modules that are approved for use within the FLEX I/O platform.

Connect Wiring for 1794-TB2, 1794-TB3, 1794-TB3S, 1794-TB3T, and 1794-TB3TS

1. Connect individual high and low signal wiring to numbered terminals on the 0…15 row (A) as indicated in Table 1 on page 5. Use Belden 8761 cable for signal.
2. Connect channel common/return to the associated terminal on row A.
3. Connect the +V DC power to terminal 34 on the 34…51 row (C) and -V common/return to terminal 16 on the 16…33 row (B).
4. If daisy chaining +V power to the next terminal base, connect a jumper from terminal 51 (+V DC) on this base unit to terminal 34 on the next base unit.
5. If continuing DC common (-V) to the next base unit, connect a jumper from terminal 33 (common) on this base unit to terminal 16 on the next base unit.
6. Connect the shield to functional earth ground as near as possible to the module. **1794-TB3T, 1794-TB3TS only**: Connect the shield to terminals 39…46 (earth ground).

ATTENTION: Connect only one current or one voltage signal per channel. Do not connect both current and voltage on one channel.

ATTENTION: Connect only one current or one voltage signal per channel. Do not connect both current and voltage on one channel.

ATTENTION: To reduce susceptibility to noise, power analog modules and digital modules from separate power supplies.

Connect Wiring for the 1794-TBN

1. Connect individual output wiring to the even-numbered terminals on row B for each output as indicated in the following table. Use Belden 8761 cable for signal wiring.
2. Connect the associated common/return to the corresponding odd-numbered terminal on row C for each output as indicated in Table 1.
3. Connect the +V DC power to terminal 34 on the 34…51 row (C) and -V common/return to terminal 16 on the 16…33 row (B).
4. If daisy chaining +V power to the next terminal base, connect a jumper from terminal 51 (+V DC) on this base unit to terminal 34 on the next base unit.
5. If continuing DC common (-V) to the next base unit, connect a jumper from terminal 33 (common) on this base unit to terminal 16 on the next base unit.
6. Connect the shield to functional earth ground as near as possible to the module.

Table 1 - Wiring Connections for the 1794-OF4I Output Module

Channel	Signal Type	Label Markings	1794-TB2, 1794-TB3, 1794-TB3S, 1794-TB3T, 1794-TB3TS		1794-TBN
			Terminal	Shield (1794-TB3T, 1794-TB3TS)	Terminal
0	Current	I0	A-0	C-39	B-0
	Current	I0 ret	A-1		C-1
	Voltage	V0	A-2	C-40	B-2
	Voltage	V0 ret	A-3		C-3
1	Current	I1	A-4	C-41	B-4
	Current	I1 ret	A-5		C-5
	Voltage	V1	A-6	C-42	B-6
	Voltage	V1 ret	A-7		C-7

Table 1 - Wiring Connections for the 1794-OF4I Output Module

Channel	Signal Type	Label Markings	1794-TB2, 1794-TB3, 1794-TB3S, 1794-TB3T, 1794-TB3TS		1794-TBN
			Terminal	Shield (1794-TB3T, 1794-TB3TS)	Terminal
2	Current	I2	A-8	C-43	B-8
	Current	I2 ret	A-9		C-9
	Voltage	V2	A-10	C-44	B-10
	Voltage	V2 ret	A-11		C-11
3	Current	I3	A-12	C-45	B-12
	Current	I3 ret	A-13		C-13
	Voltage	V3	A-14	C-46	B-14
	Voltage	V3 ret	A-15		C-15
-V DC common	1794-TB2, 1794-TB3, 1794-TB3S: Terminals B-16...B-33 are internally connected in the terminal base unit. 1794-TBN: Terminals B-16 and B-33 are internally connected in the terminal base unit. 1794-TB3T, 1794-TB3TS: Terminals 16, 17, 19, 21, 23, 25, 27, 29, 31, and 33 are internally connected in the terminal base unit.				
+V DC power	1794-TB3, 1794-TB3S: Terminals 34...51 are internally connected in the terminal base unit. 1794-TB3T, 1794-TB3TS: Terminals 34, 35, 50, and 51 are internally connected in the terminal base unit. 1794-TB2, 1794-TBN: Terminals 34 and 51 are internally connected in the terminal base unit.				
Chassis ground (shield)	1794-TB3T, 1794-TB3TS: Terminals 39...46 are internally connected to chassis ground.				

ATTENTION: Do not remove or replace a terminal base unit while power is applied. Interruption of the backplane can result in unintentional operation or machine motion.

Figure 1 - 1794-TB2, 1794-TB3, 1794-TB3S, 1794-TB3T, and 1794-TB3TS Terminal Base Wiring

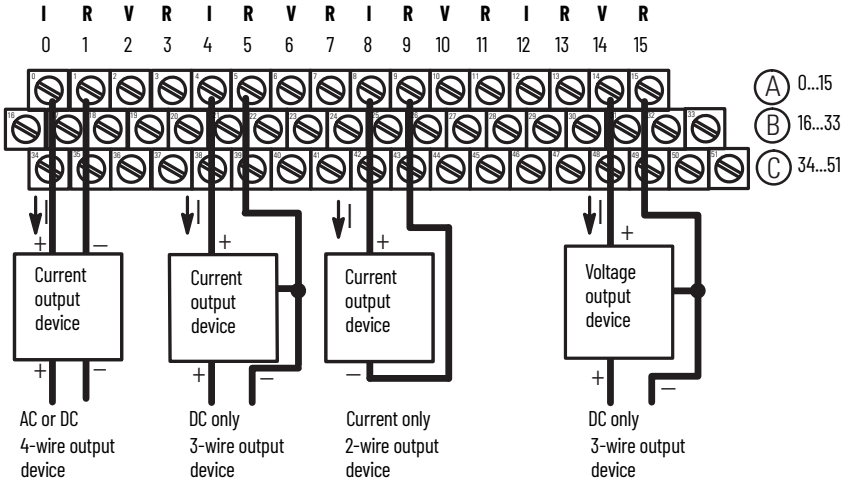

Figure 2 - 1794-TBN Terminal Base Wiring

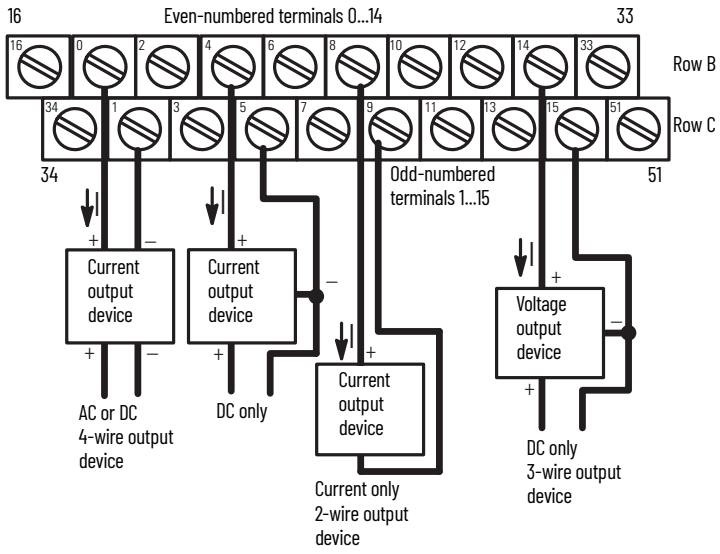

Table 2 - Input Map

Dec	15	14	13	12	11	10	9	8	7	6	5	4	3	2	1	0
Oct	**17**	**16**	**15**	**14**	**13**	**12**	**11**	**10**	**7**	**6**	**5**	**4**	**3**	**2**	**1**	**0**
Word 0	Readback channel 0															
Word 1	Readback channel 1															
Word 2	Readback channel 2															
Word 3	Readback channel 3															
Word 4	PU	FP	CF	0	Reserved				0	0	0	0	0	BD	DN	0
Word 5	0	0	0	0	P3	P2	P1	P0	0	0	0	0	W3	W2	W1	W0

Where:
PU = Power-up unconfigured state
FP = Field power off
CF = In configuration mode
BD = Bad calibration
DN = Calibration accepted
P0...P3 = Output holding in response to Q0...Q3
W0...W3 = Wire off current loop status for channels 0...3 respectively

Table 3 - Output Map

Dec	15	14	13	12	11	10	9	8	7	6	5	4	3	2	1	0
Oct	**17**	**16**	**15**	**14**	**13**	**12**	**11**	**10**	**7**	**6**	**5**	**4**	**3**	**2**	**1**	**0**
Word 0	EN	S1	S0	0	0	0	0	0	0	0	0	0	0	0	0	0
Word 1	Output data channel 0															
Word 2	Output data channel 1															
Word 3	Output data channel 2															
Word 4	Output data channel 3															
Word 5	Ch 3 configuration				Ch 2 configuration				Ch 1 configuration				Ch 0 configuration			
Word 6	IC	1	TR	IT	Q3	Q2	Q1	Q0	RV	QK	CK	G0	Channel number			

Where:
EN = Enable output; 0 = Output follows S1/S0, 1 = Output enabled
S1/S0 = Safe state source
IC = Initiate configuration bit
TR = Transparent bit
IT = Interrupt toggle bit
Q0...Q3 = Requests for outputs to hold
RV = Revert to default bit
QK = Quick calibration
CK = Calibration clock
G0 = Gain offset select

Table 4 - Configure the Output Channels

Configuration Bits				Nominal Range	Data Type	Output Values	Channel Update Rate
MSD			**LSD**				
0	0	0	1	4...20 mA	Signed 2's complement	<0000...7878>	5.0 ms
0	0	1	0	±10V		<831F...7CE1>	2.5 ms
0	0	1	1	±5V		<8618...79E8>	2.5 ms
0	1	0	0	0...20 mA	Signed 2's complement %	<0...2710>	5.0 ms
0	1	0	1	4...20 mA		<0...2710>	5.0 ms
0	1	1	0	0...10V		<0...2710>	5.0 ms
0	1	1	1	±10V		<D8F0...2710>	5.0 ms
1	0	0	0	0...20 mA	Binary	0000...F3CF	2.5 ms
1	0	0	1	4...20 mA		0000...F0F1	5.0 ms
1	0	1	0	0...10V		0000...F9C2	2.5 ms
1	0	1	1	0...5V		0000...F3CF	2.5 ms
1	1	0	0	0...20 mA	Offset binary	<0618...F9E8>	2.5 ms
1	1	0	1	4...20 mA		<8000...F878>	5.0 ms
1	1	1	0	±10V		<031F...FCE1>	2.5 ms
1	1	1	1	±5V		<0618...F9E8>	2.5 ms

Status Indicator

The OK status indicator is bi-colored: Red and green. The indicator flashes green for one of three reasons:

1. The module configuration word is zero (for example, power-up reset condition).
2. The 24V DC user power is off.
3. The module is in configuration mode.

The indicator displays red to indicate that the module did not pass the initial hardware test. Cycle power again.

After power-up, if the status indicator is not flashing green or steady green, cycle the module power again to verify a proper reset of the bus interface.

Specifications

General Specifications

Attribute	Value
Number of outputs	4 isolated
Module location	1794-TB2, 1794-TB3, 1794-TB3S, 1794-TB3T, 1794-TB3TS, 1794-TBN terminal base
Flexbus voltage	5V DC
Flexbus current	55 mA
External DC power supply, nom voltage range	24V DC 19.2…31.2V DC (includes 5% AC ripple)
External DC power supply current	210 mA @ 24V DC
Thermal dissipation, max	16 BTU/hr @ 31.2V DC
Power dissipation, max	4.7 W @ 31.2V DC
Isolation voltage	120V (continuous), Basic Insulation Type, channel to channel, channel to user, channel to system, and user power to system when used with 1794-TB2, 1794-TB3, 1794-TB3S, 1794-TB3T, or 1794-TB3TS. 250V (continuous), Basic Insulation Type, channel to channel, channel to user, channel to system, and user power to system when used with 1794-TBN. Type tested at 1000V AC for 60 s.
Data format	2's complement 2's complement % Binary Offset binary
Indicators	1 red/green power/status indicator
Keyswitch position	4
Dimensions, with module installed in base, approx. (H x W x D)	94.0 x 94.0 x 66.0 mm (3.7 x 3.7 x 2.6 in.)
Conductor category[1]	2 – on signal ports 2 – on power ports
Conductor wire size	Determined by the installed terminal base
Wire type	Shielded on signal ports
North American temp code	T4A
IECEx temp code	T4
UKEX/ATEX temp code	T4

(1) Use this conductor category information for planning conductor routing. See the Industrial Automation Wiring and Grounding Guidelines, publication 1770-4.1.

Module Specifications – 1794-OF4I

Attribute	Value
Resolution Voltage Current	15 bits plus sign 0.320 mV/cnt 0.656 mA/cnt
Conversion type	Digital-to-analog converter
Update rate	2.5/5.0 ms all channels (see Table 4 on page 7.)
Output current terminal	0 mA output until module is configured 4...20 mA (configurable) 0...20 mA (configurable)
Output voltage terminal	0V output until module is configured ±10V (configurable) 0...10V (configurable) ±5V (configurable) 0...5V (configurable)
Step response to 63% of full-scale	< 25 µs
Current load on voltage output, max	3 mA
Resistive load on voltage output	0...750 Ω
Absolute accuracy Voltage terminal Current terminal	 0.1% full-scale @ 25 °C (77 °F) 0.1% full-scale @ 25 °C (77 °F)
Accuracy drift with temperature Voltage terminal Current terminal	 0.0012% full scale/°C 0.0025% full scale/°C
Calibration	Factory-calibrated; recalibrate when necessary.
Maximum overload	30V continuous or 32 mA continuous, one channel at a time.

Environmental Specifications

Attribute	Value
Temperature, operating	IEC 60068-2-1 (Test Ad, Operating Cold), IEC 60068-2-2 (Test Bd, Operating Dry Heat), IEC 60068-2-14 (Test Nb, Operating Thermal Shock): -20...+55 °C (-4...+131 °F)
Temperature, surrounding air, max	55 °C (131 °F)
Temperature, nonoperating	IEC 60068-2-1 (Test Ab, Unpackaged Nonoperating Cold), IEC 60068-2-2 (Test Bb, Unpackaged Nonoperating Dry Heat), IEC 60068-2-14 (Test Na, Unpackaged Nonoperating Thermal Shock): -40...+85 °C (-40...+185 °F)
Relative humidity	IEC 60068-2-30 (Test Db, Unpackaged Damp Heat): 5...95% noncondensing
Vibration	IEC60068-2-6 (Test Fc, Operating): 5 g @ 10...500 Hz
Shock, operating	IEC60068-2-27 (Test Ea, Unpackaged shock): 30 g
Shock, nonoperating	IEC60068-2-27 (Test Ea, Unpackaged shock): 50 g
Emissions	IEC 61000-6-4
ESD immunity	IEC 61000-4-2: 6 kV contact discharges 8 kV air discharges
Radiated RF immunity	IEC 61000-4-3: 10V/m with 1 kHz sine wave 80% AM from 80...6000 MHz
EFT/B immunity	IEC 61000-4-4: ±2 kV @ 5 kHz on power ports ±2 kV @ 5 kHz on shielded signal ports
Surge transient immunity	IEC 61000-4-5: ±1 kV line-line(DM) and ±2 kV line-earth(CM) on power ports ±2 kV line-earth(CM) on shielded signal ports
Conducted RF immunity	IEC 61000-4-6: 10V rms with 1 kHz sine wave 80% AM from 150 kHz...80 MHz
Enclosure type rating	None (open-style)