MANUFACTURER DOCUMENT PACKAGE

Manufacturer's Manual

Reference package for procurement and maintenance review

SIEMENS

6ES7132-4BD02-0AA0

FOUR CHANNEL DIGITAL OUTPUT

Used with the applicable SIMATIC ET 200S 4DO Standard configuration.

REFERENCE PACKAGE

OFFICIAL DOCUMENT

Selected official manufacturer pages follow this cover.

Source: Siemens 4DO DC24V/0.5A ST Manual A5E01254028-01

Properties

2

2.1 Digital electronic module 4DO DC24V/0.5A ST (6ES7132-4BD02-0AA0)

Properties

- Digital electronic module with four outputs
- Output current 0.5 A per output
- Rated load voltage 24 VDC
- Short-circuit protection
- Suitable for solenoid valves, DC contactors, and indicator lights
- Supports isochronous operation
- Extended temperature range from 0 to 55 °C with vertical installation

Peculiarity

When you connect the 24 VDC rated load voltage to the power module by means of a mechanical contact, depending on the circuit the digital outputs carry the "1" signal for approximately 50 µs. You need to take this into account if you connect the module to fast counters.

General terminal assignment

Note

Terminals 4, 8, A4, A8, A3 and A7 are only available on specified terminal modules.

Terminal assignment for 4DO DC24V/0.5A ST (6ES7132-4BD02-0AA0)				
Terminal	**Assignment**	**Terminal**	**Assignment**	**Notes**
1	DO_0	**5**	DO_1	• DO_n: Output signal, Channel n • M: Chassis ground • AUX1: Protective-conductor terminal or voltage bus (freely usable up to 230 VAC)
2	DO_2	**6**	DO_3	
3	M	**7**	M	
4	M	**8**	M	
A4	AUX1	**A8**	AUX1	
A3	AUX1	**A7**	AUX1	

Usable terminal modules

Usable terminal modules for 4DO DC24V/0.5A ST (6ES7132-4BD02-0AA0)				
TM-E15C26-A1 (6ES7193-4CA50-0AA0)	TM-E15C24-A1 (6ES7193-4CA30-0AA0)	TM-E15C24-01 (6ES7193-4CB30-0AA0)	TM-E15C23-01 (6ES7193-4CB10-0AA0)	← Spring terminal
TM-E15S26-A1 (6ES7193-4CA40-0AA0)	TM-E15S24-A1 (6ES7193-4CA20-0AA0)	TM-E15S24-01 (6ES7193-4CB20-0AA0)	TM-E15S23-01 (6ES7193-4CB00-0AA0)	← Screw-type terminal
TM-E15N26-A1 (6ES7193-4CA80-0AA0)	TM-E15N24-A1 (6ES7193-4CA70-0AA0)	TM-E15N24-01 (6ES7193-4CB70-0AA0)	TM-E15N23-01 (6ES7193-4CB60-0AA0)	← Fast Connect
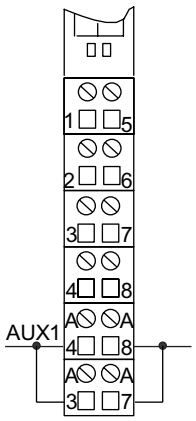	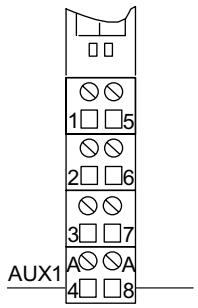	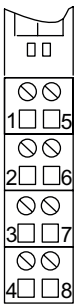	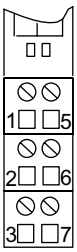	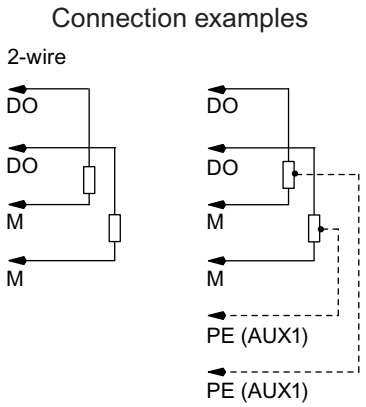

Block diagram

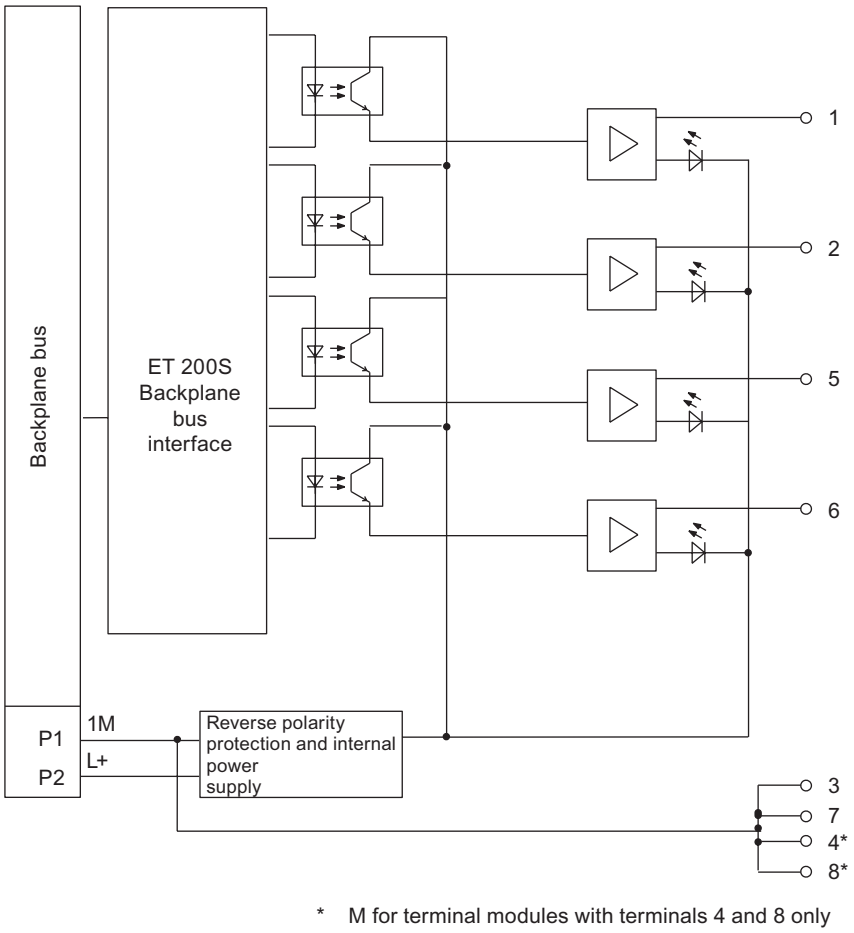

Figure 2-1 Block diagram of the 4DO DC24V/0.5A ST

Technical specifications of 4DO DC24V/0.5A ST (6ES7132-4BD02-0AA0)

Dimensions and weight	
Width (mm)	15
Weight	Approx. 40 g
Module-specific data	
Supports isochronous operation	Yes
Number of outputs	4
Cable length	
• Unshielded	Max. 600 m
• Shielded	Max. 1000 m
Parameter length	1 byte
Address space	1 byte
Address space (packed)	4 bits

Voltages, currents, potentials	
Rated load voltage L+ (from the power module)	24 VDC
• Reverse polarity protection	Yes[1]
Total current of the outputs (per module)	2 A
Galvanic isolation	
• Between the channels	No
• Between the channels and backplane bus	Yes
Permissible potential difference	
• Between the different circuits	75 VDC / 60 VAC
Insulation tested	500 VDC
Current consumption	
• From the rated load voltage L+ (no load)	Max. 10 mA per channel
Power dissipation of the module	Typically 0.8 W
Status, interrupts, diagnostics	
Status display	Green LED per channel
Diagnostics function	No
Data for selecting an actuator	
Output voltage	
• At signal "1"	Min. L+ (-1 V)
Output current	
• At signal "1" – Rated value – Permitted range	 0.5 A 7 mA to 0.6 A
• With signal "0" (leakage current)	Max. 0.5 mA
Output delay (for resistive load)	
• At "0" to "1"	Max. 50 µs Typically 45 µs
• At "1" to "0"	Max. 120 µs Typically 90 µs
Load resistor range	48 Ω to 3.4 kΩ
Lamp load	Max. 5 W
Connecting two outputs in parallel	
• For redundant triggering of a load	Yes (per module)
• To increase performance	No
Control of a digital input	Yes
Switch rate	
• For resistive load	Max. 800 Hz
• On inductive load	2 Hz
• For lamp load	10 Hz
Limitation (internal) of the voltage induced on circuit interruption	Typically L+ (-55 V to -60 V)
Reverse-voltage proof	Yes, if using the same load voltage as at the power module
Short-circuit protection of the output	Yes[2]
• Threshold on	Typically 0.7 A to 1.5 A

[1] Polarity reversal can lead to the digital outputs being connected through.

[2] Per channel

Diagnostics

3

3.1 Diagnostics using LED display

LED display

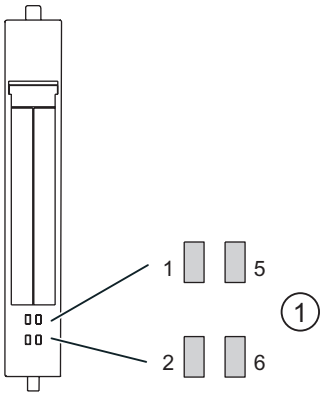

① Status display for output status (green)

Status displays

Event (LEDs)				Cause	Remedy
1	5	2	6		
On				Output on channel 0 activated.	—
	On			Output on channel 1 activated.	—
		On		Output on channel 2 activated.	—
			On	Output on channel 3 activated.	—