MANUFACTURER DOCUMENT PACKAGE

Manufacturer's Manual

Selected official pages for procurement and maintenance review

PRODUCT BRAND

Siemens

PRODUCT MODEL

6ES7315-1AF03-0AB0

MPI Program Processing Module. Relevant section pages: 4, 16, 18, 19, 20, 162. Adjacent model text on shared pages is outside this product reference.

OFFICIAL SOURCE

PLC S7-300, CPU Specifications CPU 312 IFM to CPU 318-2 DP; 10/2001; A5E00111190-01

Siemens original documentation and product reference

This historical Siemens original contains inconsistent model/current entries in its numeric CPU315 table; those pages are excluded. Numeric data are taken from the exact 1AF03 manufacturer data sheet. The retained originals establish model scope, operation, memory and dimensions.

AMIKON PRODUCT SUPPORT

+86-18020776786 INFO@AMIKON.CN

AMIKONG.COM

Amikon Limited prepared this independent reference package. Selected manufacturer pages follow with their original content and pagination visible.

SIEMENS

SIMATIC

PLC S7-300, CPU Specifications CPU 312 IFM to CPU 318-2 DP

Reference Manual

Preface, Contents

CPUs 1

CPU 31x-2 as DP Master/DP Slave and Direct Communication 2

Cycle and Reaction times 3

CPU Function, depending on CPU and STEP 7 Version 4

Tips and Tricks 5

Appendix

Standards, Certificates and Approvals A

Dimensioned Drawings B

List of Abbreviations C

Glossary, Index



This documentation can **no longer** be ordered under the given number!

This manual is part of the documentation package with the order number
6ES7398-8FA10-8BA0

Edition 10/2001
A5E00111190-01

Safety Guidelines

This manual contains notices intended to ensure personal safety, as well as to protect the products and connected equipment against damage. These notices are highlighted by the symbols shown below and graded according to severity by the following texts:



Danger

indicates that death, severe personal injury or substantial property damage will result if proper precautions are not taken.



Warning

indicates that death, severe personal injury or substantial property damage can result if proper precautions are not taken.



Caution

indicates that minor personal injury can result if proper precautions are not taken.

Caution

indicates that property damage can result if proper precautions are not taken.

Notice

draws your attention to particularly important information on the product, handling the product, or to a particular part of the documentation.

Qualified Personnel

Only **qualified personnel** should be allowed to install and work on this equipment. Qualified persons are defined as persons who are authorized to commission, to ground and to tag circuits, equipment, and systems in accordance with established safety practices and standards.

Correct Usage

Note the following:



Warning

This device and its components may only be used for the applications described in the catalog or the technical description, and only in connection with devices or components from other manufacturers which have been approved or recommended by Siemens.

This product can only function correctly and safely if it is transported, stored, set up, and installed correctly, and operated and maintained as recommended.

Trademarks

SIMATIC®, SIMATIC HMI® and SIMATIC NET® are registered trademarks of SIEMENS AG.

Copyright © Siemens AG 2001 All rights reserved

The reproduction, transmission or use of this document or its contents is not permitted without express written authority. Offenders will be liable for damages. All rights, including rights created by patent grant or registration of a utility model or design, are reserved.

Siemens AG
Bereich Automatisierungs- und Antriebstechnik
Geschaeftsgebiet Industrie-Automatisierungssysteme
Postfach 4848, D- 90327 Nuernberg

Disclaim of Liability

We have checked the contents of this manual for agreement with the hardware and software described. Since deviations cannot be precluded entirely, we cannot guarantee full agreement. However, the data in this manual are reviewed regularly and any necessary corrections included in subsequent editions. Suggestions for improvement are welcomed.

© Siemens AG 2001
Technical data subject to change.

Excellence in Automation & Drives: Siemens

Scope of the Manual

The manual covers the following CPUs and Hardware/Software versions:

CPU	Order No.	As of Version	
		Firmware	Hardware
CPU 312 IFM	6ES7 312-5AC02-0AB0 6ES7 312-5AC82-0AB0	1.1.0	01
CPU 313	6ES7 313-1AD03-0AB0	1.1.0	01
CPU 314	6ES7 314-1AE04-0AB0 6ES7 314-1AE84-0AB0	1.1.0	01
CPU 314 IFM	6ES7 314-5AE03-0AB0 6ES7 314-5AE83-0AB0	1.1.0	01
CPU 314 IFM	6ES7 314-5AE10-0AB0	1.1.0	01
CPU 315	6ES7 315-1AF03-0AB0	1.1.0	01
CPU 315-2 DP	6ES7 315-2AF03-0AB0 6ES7 315-2AF83-0AB0	1.1.0	01
CPU 316-2 DP	6ES7 316-2AG00-0AB0	1.1.0	01
CPU 318-2	6ES7 318-2AJ00-0AB0	V3.0.0	03

This manual describes all modules that are valid at the time the manual is released. We reserve the right to release product information for new modules or new module versions.

Alterations from Previous Version

The following changes were made in the *Structuring, CPU Data* Manual, Order no. 6ES7398-8AA03-8BA0, Edition 2:

- Now, this manual only contains the CPU description. For information on the S7-300 structure and installation refer to the *Installation Manual*.
- CPU 318-2 DP as of Firmware Version V3.0.0 behaves as DP Master according to PROFIBUS DPV1.

Agreement for CPU 314IFM

The CPU 314IFM is available in 2 versions:

- with slot for Memory Card (6ES7314-5EA**10**-0AB0)
- without slot for Memory Card (6ES7314-5EA**0x**-0AB0)

All details in this chapter apply to both versions of CPU 314IFM, unless explicit reference is made to differences between them.

1.1 Control and Display Elements

Figure 1-1 shows you the control and display elements of a CPU.
The order of the elements in some CPUs might differ from the order shown in the figure below. The individual CPUs do not always have all the elements shown here. Table 1-1 shows you the differences.

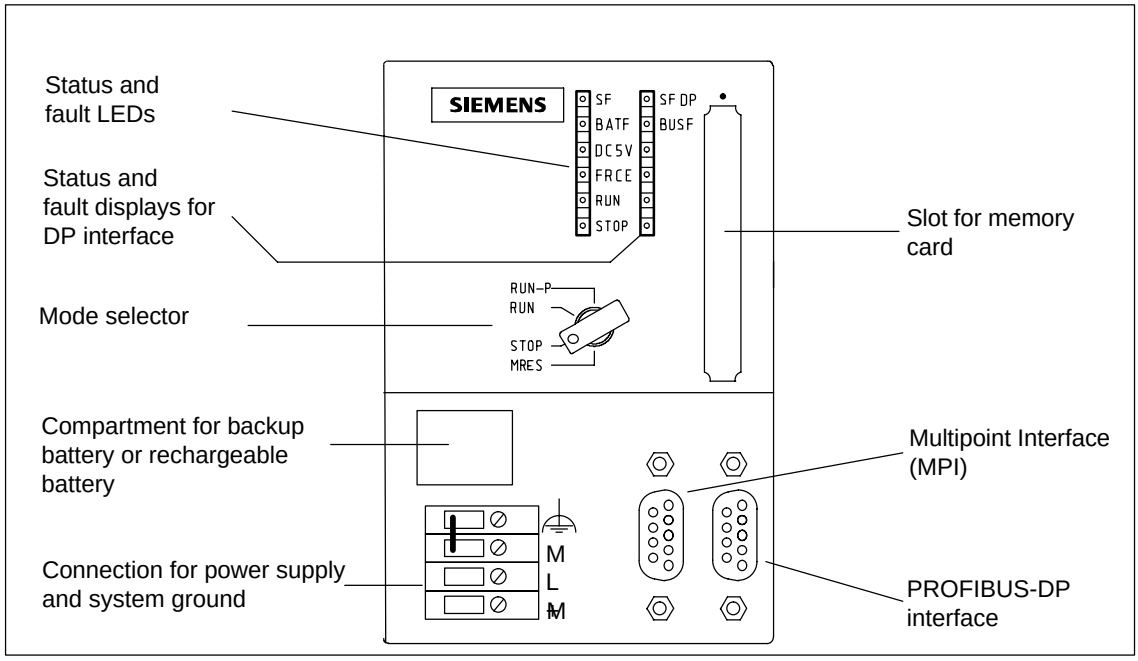

Figure 1-1 Control and Display Elements of the CPUs

Differences Between CPUs

Table 1-1 The Differences in Control and Display Elements Between CPUs

Element	312 IFM	313	314	314 IFM		315	315-2 DP	316-2 DP	318-2
				-5AE0x-	-5AE10-				
LEDs for DP interface	No						Yes		
Backup battery/accumulator	No	No accumulator	Yes						
Connection for power supply	No; via the front connector	Yes							
Memory card	No	Yes		No	Yes	Yes			
PROFIBUS-DP interface	No						Yes		

1.1.2 Mode Selector Switch

The mode selector is the same in all CPUs.

Mode Selector Positions

The positions of the mode selector are explained in the order in which they appear on the CPU.

Details on CPU operating modes are found in the *STEP 7* Online Help .

Position	Description	Description
RUN-P	RUN-PROGRAM mode	The CPU scans the user program. The key cannot be taken out in this position.
RUN mode	RUN mode	The CPU scans the user program. The user program cannot be changed without password confirmation. The key can be removed in this position to prevent anyone not authorized to do so from changing the operating mode.
Stop mode	Stop mode	The CPU does not scan user programs. The key can be removed in this position to prevent anyone not authorized to do so from changing the operating mode.
MRES mode	Memory reset	Momentary-contact position of the mode selector for CPU memory reset (or a cold start as well in the case of the 318-2). Memory reset per mode selector switch requires a specific sequence of operation.

1.1.3 Backup battery/accumulator

Exceptions

The CPUs 312IFM and 313 do not have a real time clock so they do not need an accumulator battery.
The CPU 312IFM does not have a buffer which means that you can not insert a battery.

Backup battery or rechargeable battery?

Table 1-2 shows the differences in the backup provided by an accumulator and a backup battery.

Table 1-2 Using a Backup Battery or Accumulator

Backup with...	... Backs up	Remarks	Backup Time
Rechargeable battery	Real-time clock only	The rechargeable battery is charged after CPU POWER ON. **Note** You must create a backup of the user program either on Memory Card or, in the case of CPU314IFM 314 (-5AE**0x**-), on EPROM.	120 h (at 25°C) 60 h (at 60°C) ... after 1 hour of recharging
Backup battery	• User program (if not stored on memory card and protected against loss on power failure) • More data areas in data blocks are to be retained than possible without battery • The real-time clock	**Note** The >CPU can retain part of the data without backup battery. You only need a backup battery if you want to retain more data than this.	1 year

1.1.4 Memory card

Exceptions

You cannot insert a memory card with the CPUs 312 IFM and 314 IFM (-5AE**0x**). These CPUs have an integrated read-only memory.

Purpose of the Memory Card

With the memory card, you can expand the load memory of your CPU.

You can store the user program and the parameters that set the responses of the CPU and modules on the memory card.

You can also back up your CPU operating system to a Memory Card. except CPU 318-2.

If you store the user program on the memory card, it will remain in the CPU when the power is off even without a backup battery.

Available Memory Cards

The following memory cards are available:

Table 1-3 Memory Cards

Capacity	Type	Remarks
16 KB	5 V FEPROM	The CPU supports the following functions: • Loading of the user program on the module into the CPU With this function, the memory of the CPU is reset, the user program is downloaded onto the memory card, and then uploaded from the memory card to the CPU's RAM. • Copying RAM data to ROM (not with CPU318-3182)
32 KB		
64 KB		
256 KB		
128 KB		
512 KB		
1 MB		
2 MB		
4 MB		
128 KB	5 V RAM	Only with the CPU 318-2
256 KB		
512 KB		
1 MB		
2 MB		

CPU 313/314/315/315-2DP/316-2 DP

Figure B-2 shows the dimensioned drawing of the CPU 313/314/315/315-2 DP/316-2 DP. The dimensions are the same for all the CPUs listed. Their appearance can differ (see Chapter 1). For example, the CPU 315-2 DP has two LED strips.

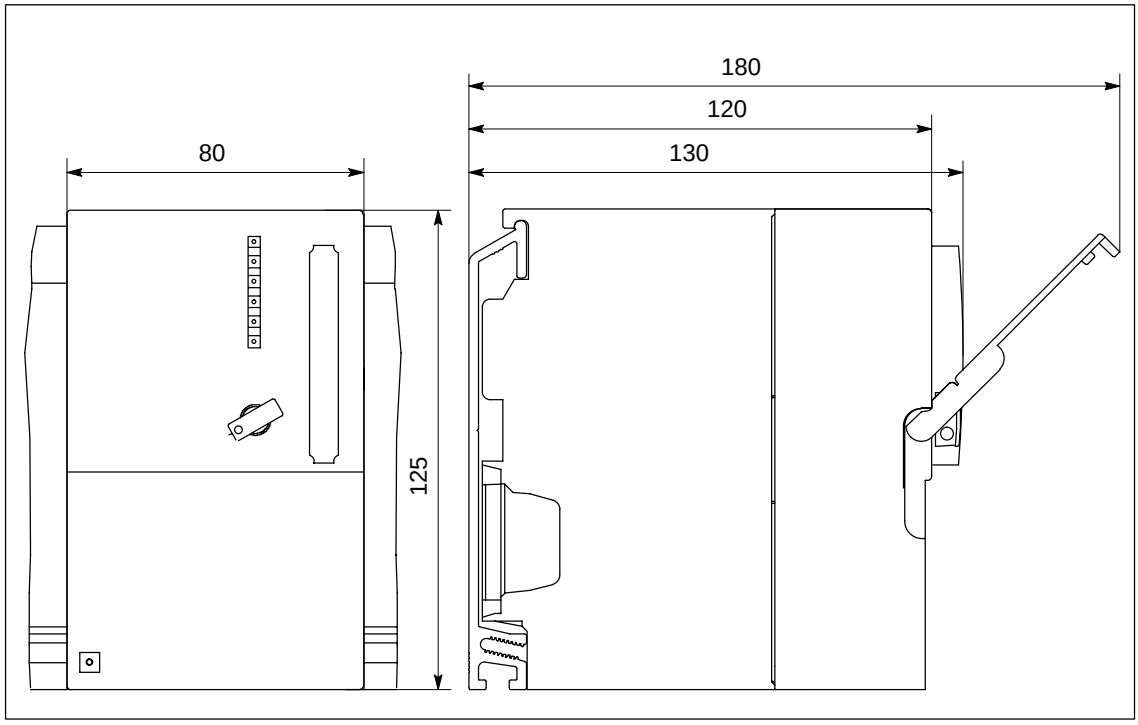

Figure B-2 Dimensioned Drawing of the CPU 313/314/315/315-2 DP/316-2DP