AMIKON TECHNICAL DOCUMENTATION

Installation Instructions

Siemens 6ES7132-4BB31-0AA0

ET 200S 2-Channel Output Module

OUTPUTS	RATING	TOTAL	VARIANT
2 DO	24 V / 2 A	4 A max.	Standard

For qualified personnel only. Isolate the equipment and follow the complete manufacturer and site safety procedures. This reference does not replace the approved project design or the full installation manual.

01 PREPARATION AND WIRING CHECKS

- Verify the selected terminal module and its actual output, reference and auxiliary terminals.
- Check supply polarity; reversed polarity can switch outputs through.
- Observe the 2 A channel rating and 4 A maximum total current.
- Do not parallel outputs to increase current capacity.
- Account for the approximately 50 microsecond turn-on transient when connecting high-speed counters.

02 ORIGINAL WIRING REFERENCE

Original source PDF pages 8, 7, 9, 10. The following pages retain the original Siemens drawings and printed page numbers.

Siemens original documentation and product reference

Usable terminal modules

Usable terminal modules for 2DO DC24V/2A ST (6ES7132-4BB31-0AA0)				
TM-E15C26-A1 (6ES7193-4CA50-0AA0)	TM-E15C24-A1 (6ES7193-4CA30-0AA0)	TM-E15C24-01 (6ES7193-4CB30-0AA0)	TM-E15C23-01 (6ES7193-4CB10-0AA0)	← Spring terminal
TM-E15S26-A1 (6ES7193-4CA40-0AA0)	TM-E15S24-A1 (6ES7193-4CA20-0AA0)	TM-E15S24-01 (6ES7193-4CB20-0AA0)	TM-E15S23-01 (6ES7193-4CB00-0AA0)	← Screw-type terminal
TM-E15N26-A1 (6ES7193-4CA80-0AA0)	TM-E15N24-A1 (6ES7193-4CA70-0AA0)	TM-E15N24-01 (6ES7193-4CB70-0AA0)	TM-E15N23-01 (6ES7193-4CB60-0AA0)	← Fast Connect
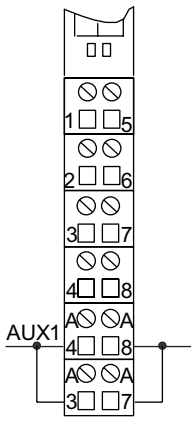	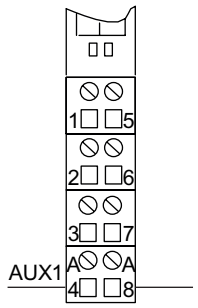	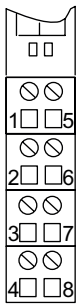	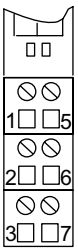	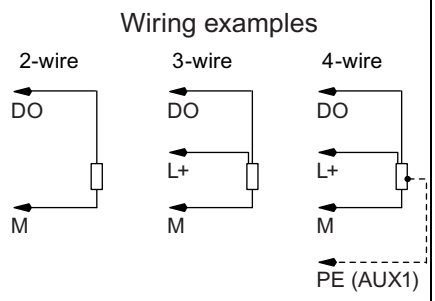

Properties

1

1.1 Digital electronic module 2DO DC24V/2A ST (6ES7132-4BB31-0AA0)

Properties

- Digital electronic module with two outputs
- Output current 2 A per output
- Rated load voltage 24 VDC
- Short-circuit protection
- Suitable for solenoid valves, DC contactors, and indicator lights
- Extended temperature range from 0 to 55° C with vertical installation

Peculiarity

When you connect the 24 VDC rated load voltage to the power module by means of a mechanical contact, depending on the circuit the digital outputs carry the "1" signal for approximately 50 µs. You need to take this into account if you connect the module to fast counters.

General terminal assignment

Note

Terminals 4, 8, A4, A8, A3 and A7 are only available at specified terminal modules.

Terminal assignment for 2DO DC24V/2A ST (6ES7132-4BB31-0AA0)				
Terminal	**Assignment**	**Terminal**	**Assignment**	**Notes**
1	DO_0	5	DO_1	• DO_n: Output signal, Channel n • L+: Rated load voltage 24 VDC • M: Chassis ground • n.c.: Not connected (max. 30 V DC can be connected) • AUX1: Protective-conductor terminal or potential bus (freely usable up to 230 VAC)
2	L+	6	L+	
3	M	7	M	
4	n.c.	8	n.c.	
A4	AUX1	A8	AUX1	
A3	AUX1	A7	AUX1	

Block diagram

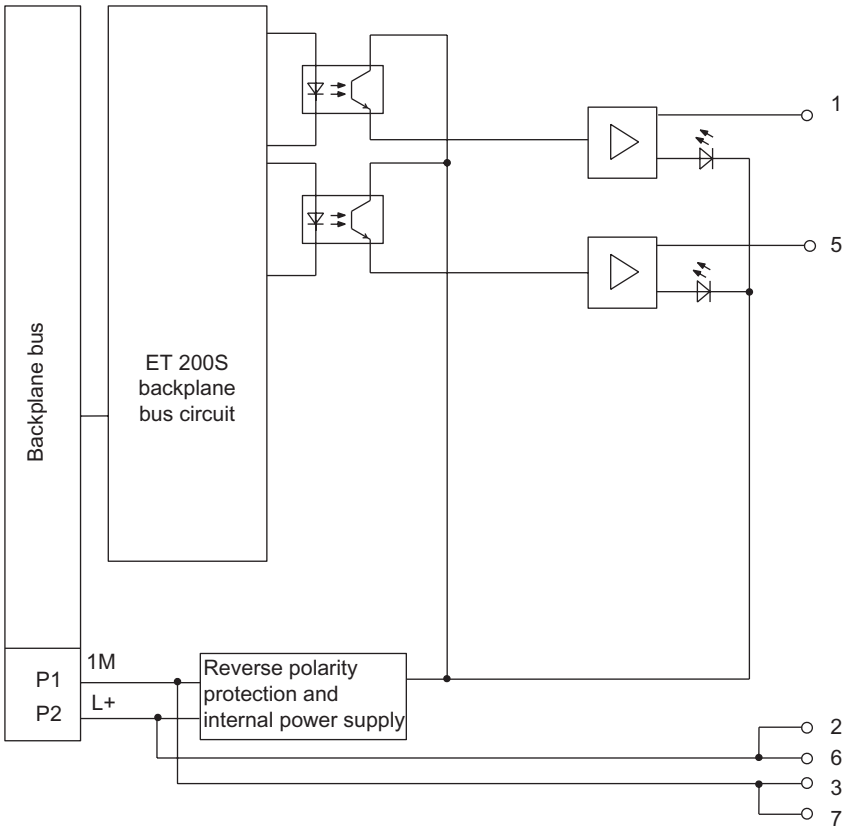

Figure 1-1 Block diagram of the 2DO DC24V/2A ST

Technical data 2DO DC24V/2A ST (6ES7132-4BB31-0AA0)

Dimensions and weight	
Width (mm)	15
Weight	Approx. 40 g
Module-specific data	
Supports isochronous operation	No
Number of outputs	2
Cable length	
• Unshielded	Max. 600 m
• Shielded	Max. 1000 m
Parameter length	1 byte
Address space	1 byte
Address space (packed)	2 bits
Voltages, currents, potentials	
Rated load voltage L+ (from the power module)	24 VDC
• Polarity reversal	Yes[1]

Total current of the outputs (per module)	4 A
Electrical isolation	
• Between the channels	No
• Between the channels and backplane bus	Yes
Permissible potential difference	
• Between the different circuits	75 VDC / 60 VAC
Insulation tested	500 VDC
Current consumption	
• From the rated load voltage L+ (no load)	Max. 5 mA per channel
Power dissipation of the module	Typically 1,4 W
Status, interrupts, diagnostics	
Status display	Green LED per channel
Diagnostics function	No
Data for selecting an actuator	
Output voltage	
• At signal "1"	Min. L+ (-1 V)
Output current	
• At signal "1"	
– Rated value	2 A
– Permitted range	7 mA to 2.4 A
• With signal "0" (leakage current)	Max. 0.5 mA
Output delay (for resistive load)	
• At "0" to "1"	Max. 200 µs
• At "1" to "0"	Max. 1.3 ms
Load resistor range	12 Ω to 3.4 kΩ
Lamp load	max. 10 W
Connecting two outputs in parallel	
• For redundant triggering of a load	Yes (per module)
• To increase performance	No
Control of a digital input	Yes
Switch rate	
• For resistive load	100 Hz
• On inductive load	2 Hz (0.5 H)
• For lamp load	10 Hz
Limitation (internal) of the voltage induced on circuit interruption	Typically L+ (-55 V to -60 V)
Reverse-voltage proof	Yes, if using the same load voltage as at the power module
Short-circuit protection of the output	Yes[2]
• Threshold on	Typically 2.8 A to 7.2 A

[1] Polarity reversal can lead to the digital outputs being connected through.

[2] Per channel