MANUFACTURER DOCUMENT PACKAGE

Manufacturer's Manual

Selected official pages for procurement and maintenance review

PRODUCT BRAND

Siemens

PRODUCT MODEL

6ES7132-4BB31-0AB0

ET 200S 2-Channel Output Module. Relevant section pages: 7, 8, 9, 10, 11, 13, 14. Adjacent model text on shared pages is outside this product reference.

OFFICIAL SOURCE

ET 200S 2DO DC24V/2A HF; 04/2007, A5E01077255-01

Siemens original documentation and product reference

The original tables on pages 7 and 8 say -0AA0; the cover, page headings and technical section identify this -0AB0 High Feature module. Original pages remain unchanged; the exact -0AB0 data sheet corroborates the authored specifications.

AMIKON PRODUCT SUPPORT

+86-18020776786 INFO@AMIKON.CN

AMIKONG.COM

Amikon Limited prepared this independent reference package. Selected manufacturer pages follow with their original content and pagination visible.

SIEMENS

Preface

Properties 1

Parameters 2

Diagnostics 3

SIMATIC

ET 200S distributed I/O Digital electronic module 2DO DC24V/2A HF (6ES7132-4BB31-0AB0)

Manual

04/2007
A5E01077255-01

Safety Guidelines

This manual contains notices you have to observe in order to ensure your personal safety, as well as to prevent damage to property. The notices referring to your personal safety are highlighted in the manual by a safety alert symbol, notices referring only to property damage have no safety alert symbol. These notices shown below are graded according to the degree of danger.

⚠DANGER

indicates that death or severe personal injury **will** result if proper precautions are not taken.

⚠WARNING

indicates that death or severe personal injury **may** result if proper precautions are not taken.

⚠CAUTION

with a safety alert symbol, indicates that minor personal injury can result if proper precautions are not taken.

CAUTION

without a safety alert symbol, indicates that property damage can result if proper precautions are not taken.

NOTICE

indicates that an unintended result or situation can occur if the corresponding information is not taken into account.

If more than one degree of danger is present, the warning notice representing the highest degree of danger will be used. A notice warning of injury to persons with a safety alert symbol may also include a warning relating to property damage.

Qualified Personnel

The device/system may only be set up and used in conjunction with this documentation. Commissioning and operation of a device/system may only be performed by **qualified personnel**. Within the context of the safety notes in this documentation qualified persons are defined as persons who are authorized to commission, ground and label devices, systems and circuits in accordance with established safety practices and standards.

Prescribed Usage

Note the following:

⚠WARNING

This device may only be used for the applications described in the catalog or the technical description and only in connection with devices or components from other manufacturers which have been approved or recommended by Siemens. Correct, reliable operation of the product requires proper transport, storage, positioning and assembly as well as careful operation and maintenance.

Trademarks

All names identified by ® are registered trademarks of the Siemens AG. The remaining trademarks in this publication may be trademarks whose use by third parties for their own purposes could violate the rights of the owner.

Disclaimer of Liability

We have reviewed the contents of this publication to ensure consistency with the hardware and software described. Since variance cannot be precluded entirely, we cannot guarantee full consistency. However, the information in this publication is reviewed regularly and any necessary corrections are included in subsequent editions.

Siemens AG
Automation and Drives
Postfach 48 48
90327 NÜRNBERG
GERMANY

Ordernumber: A5E01077255-01
℗ 11/2007

Copyright © Siemens AG 2007.
Technical data subject to change

Preface

Preface

Purpose of the manual

This manual supplements the *ET 200S Distributed I/O System* Operating Instructions. General functions for the ET 200S are described in the *ET 200S Distributed I/O System* Operating Instructions.

The information in this document along with the operating instructions enables you to commission the ET 200S.

Basic knowledge requirements

To understand these operating instructions you should have general knowledge of automation engineering.

Scope of the manual

This manual applies to this ET 200S module. It describes the components that are valid at the time of publication.

Recycling and disposal

Thanks to the fact that it is low in contaminants, this ET 200S module is recyclable. For environmentally compliant recycling and disposal of your electronic waste, please contact a company certified for the disposal of electronic waste.

Additional support

If you have any questions relating to the products described in these operating instructions, and do not find the answers in this document, please contact your local Siemens representative.

http://www.siemens.com/automation/partner

The portal to our technical documentation for the various SIMATIC products and systems is available at:

http://www.siemens.com/automation/simatic/portal

The online catalog and ordering system are available at:
http://www.siemens.com/automation/mall

Properties

1

1.1 Digital electronic module 2DO DC24V/2A HF (6ES7132-4BB31-0AB0)

Properties

- Digital electronic module with two outputs
- Output current 2 A per output
- Rated load voltage 24 VDC
- Diagnostics: Wire break
- Diagnostics: Short circuit
- Short-circuit protection
- Suitable for solenoid valves, DC contactors, and indicator lights
- Supports isochronous operation
- Extended temperature range from 0 to 55 °C with vertical installation

Peculiarity

When you connect the 24 VDC rated load voltage to the power module by means of a mechanical contact, depending on the circuit the digital outputs carry the "1" signal for approximately 50 µs. You need to take this into account if you connect the module to fast counters.

General terminal assignment

Note

Terminals 4, 8, A4, A8, A3 and A7 are only available at specified terminal modules.

Terminal assignment for 2DO 24 VDC/2 A HF (6ES7132-4BB31-0AA0)				
Terminal	**Assignment**	**Terminal**	**Assignment**	**Notes**
1	DO_0	**5**	DO_1	• DO_n: Output signal, Channel n • L+: Rated load voltage 24 VDC • M: Ground • n.c.: Not connected (max. 30 V DC can be connected) • AUX1: Protective-conductor terminal or potential bus (freely usable up to 230 VAC)
2	L+	**6**	L+	
3	M	**7**	M	
4	n.c.	**8**	n.c.	
A4	AUX1	**A8**	AUX1	
A3	AUX1	**A7**	AUX1	

Usable terminal modules

Usable terminal modules for 2DO 24 VDC/2 A HF (6ES7132-4BB31-0AA0)				
TM-E15C26-A1 (6ES7193-4CA50-0AA0)	TM-E15C24-A1 (6ES7193-4CA30-0AA0)	TM-E15C24-01 (6ES7193-4CB30-0AA0)	TM-E15C23-01 (6ES7193-4CB10-0AA0)	← Spring terminal
TM-E15S26-A1 (6ES7193-4CA40-0AA0)	TM-E15S24-A1 (6ES7193-4CA20-0AA0)	TM-E15S24-01 (6ES7193-4CB20-0AA0)	TM-E15S23-01 (6ES7193-4CB00-0AA0)	← Screw-type terminal
TM-E15N26-A1 (6ES7193-4CA80-0AA0)	TM-E15N24-A1 (6ES7193-4CA70-0AA0)	TM-E15N24-01 (6ES7193-4CB70-0AA0)	TM-E15N23-01 (6ES7193-4CB60-0AA0)	← Fast Connect
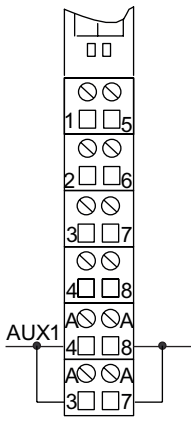	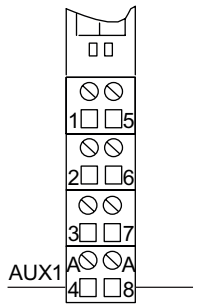	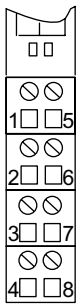	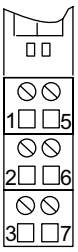	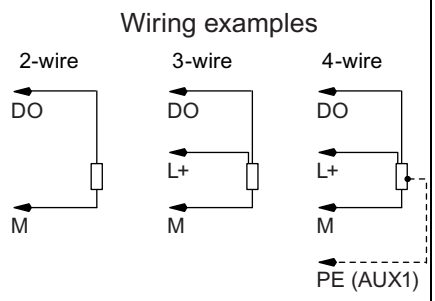

Block diagram

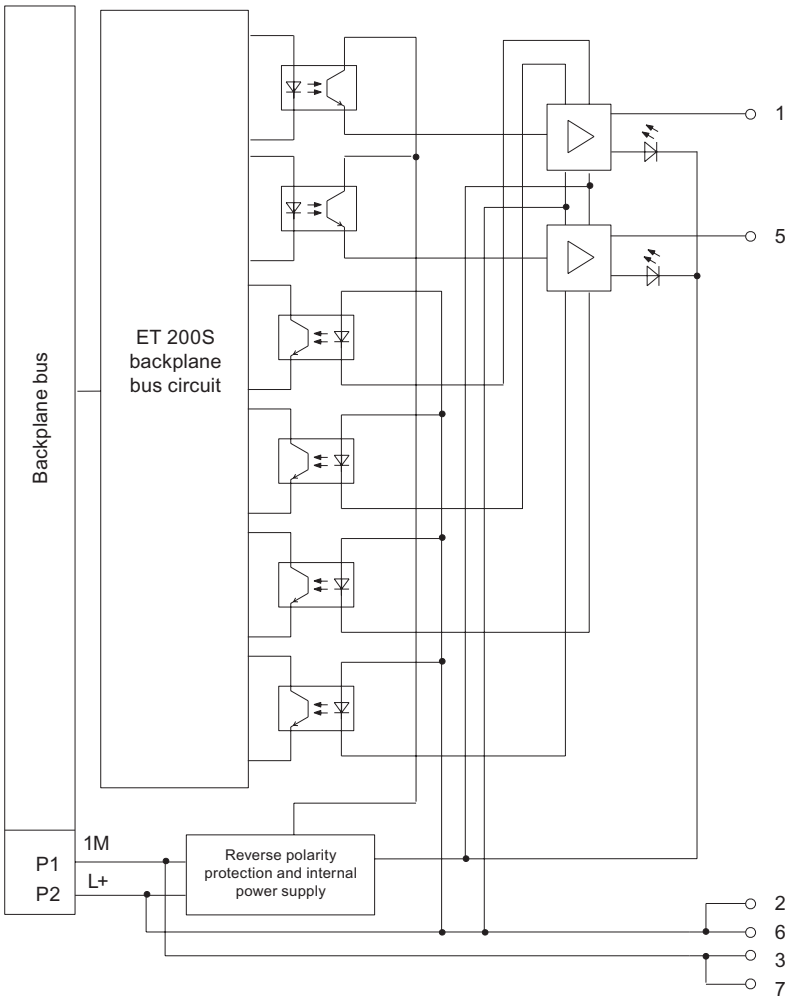

Figure 1-1 Block diagram of the 2DO 24 VDC/2 A HF

2DO 24 VDC/2 A HF analog Technical data (6ES7132-4BB31-0AB0)

Dimensions and weight	
Width (mm)	15
Weight	Approx. 40 g
Module-specific data	
Supports isochronous operation	Yes
Number of outputs	2
Cable length	
• Unshielded	Max. 600 m
• Shielded	Max. 1000 m
Parameter length	3 bytes
Address space	1 byte
Address space (packed)	2 bits

Voltages, currents, potentials	
Rated load voltage L+ (from the power module)	24 VDC
• Polarity reversal	Yes[1]
Total current of the outputs (per module)	4 A
Electrical isolation	
• Between the channels	No
• Between the channels and backplane bus	Yes
Permissible potential difference	
• Between the different circuits	75 VDC / 60 VAC
Insulation tested	500 VDC
Current consumption	
• From the rated load voltage L+ (no load)	Max. 5 mA per channel
Power dissipation of the module	Typically 1.4 W
Status, interrupts, diagnostics	
Status display	Green LED per channel
Diagnostics function	
• Group error	Red "SF" LED
• Diagnostics functions readable	Yes
Data for selecting an actuator	
Output voltage	
• At signal "1"	Min. L+ (-1 V)
Output current	
• At signal "1" – Rated value – Permitted range	 2 A 7 mA to 2.4 A
• With signal "0" (leakage current)	Max. 0.5 mA
Output delay (for resistive load)	
• At "0" to "1"	Max. 100 µs
• At "1" to "0"	Max. 400 µs
Load resistor range	12 Ω to 3.4 kΩ
Lamp load	Max. 5 W
Connecting two outputs in parallel	
• For redundant triggering of a load	Yes (per module)
• To increase performance	No
Control of a digital input	Yes
Switch rate	
• For resistive load	100 Hz
• On inductive load	2 Hz (0.5 H)
• For lamp load	10 Hz
Limitation (internal) of the voltage induced on circuit interruption	Typically L+ (-55 V to -60 V)
Reverse-voltage proof	Yes, if using the same load voltage as at the power module
Short-circuit protection of the output	Yes[2]
• Threshold on	Typically 4 A

[1] Polarity reversal can lead to the digital outputs being connected through.

[2] Per channel

Parameters

2

2.1 Parameters

This table shows the parameters for digital output modules:

Table 2-1 Parameters for digital output modules

2DO 24 VDC/2 A HF	Range of values	Default setting	Applicability
Response to CPU/master STOP	• Substitute a value • Keep last value	Substitute a value	Module
Substitute value [1]	• "0" • "1"	"0"	Channel
Diagnostics: Wire break [2]	• Disable • Enable	Disable	Channel
Diagnostics: Short circuit to M	• Disable • Enable	Disable	Channel
[1] If the interface module or COMPACT module becomes deenergized, the digital output modules will not produce substitute values. Output value = 0. [2] A wire break is only detected in the switched output state.			

Diagnostics

3

3.1 Diagnostics using LED display

LED display

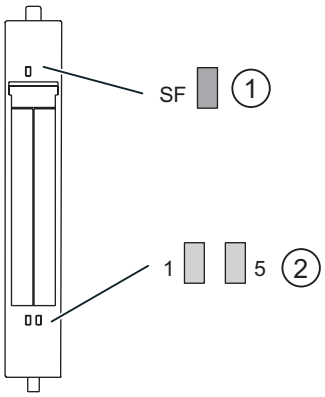

① Batch error (red)

② Status display for output status (green)

Status and error displays

Event (LEDs)			Cause	Remedy
SF	1	5		
On			No parameter assignment or incorrect module plugged in. A diagnostic message is pending.	Check the parameter assignment. Evaluate the diagnostics.
	On		Output on channel 0 activated.	—
		On	Output on channel 1 activated.	—

3.2 Error types

Digital electronic module error types

Table 3-1 Error types

Error type		Meaning	Remedy
1_D	00001: Short circuit	Short circuit on final controlling element supply after M.	Correct the process wiring.
6_D	00110: Open circuit	Line to the final controlling element interrupted.	