AMIKON TECHNICAL DOCUMENTATION

Installation Instructions

Siemens 6ES7132-4BB31-0AB0

ET 200S 2-Channel Output Module

OUTPUTS	RATING	TOTAL	VARIANT
2 DO	**24 V / 2 A**	**4 A max.**	**High Feature**

For qualified personnel only. Isolate the equipment and follow the complete manufacturer and site safety procedures. This reference does not replace the approved project design or the full installation manual.

01 PREPARATION AND WIRING CHECKS

- Verify the selected terminal module and its actual output, reference and auxiliary terminals.
- Check supply polarity; reversed polarity can switch outputs through.
- Observe the 2 A channel rating and 4 A maximum total current.
- Do not parallel outputs to increase current capacity.
- Enable required diagnostics and verify switched-on wire-break detection and stop-state behavior.
- Original table captions on pages 7 and 8 say -0AA0; the surrounding HF section identifies -0AB0. Original pages remain unchanged.

02 ORIGINAL WIRING REFERENCE

Original source PDF pages 8, 7, 9, 10, 11. The following pages retain the original Siemens drawings and printed page numbers.

Siemens original documentation and product reference

Usable terminal modules

Usable terminal modules for 2DO 24 VDC/2 A HF (6ES7132-4BB31-0AA0)				
TM-E15C26-A1 (6ES7193-4CA50-0AA0)	TM-E15C24-A1 (6ES7193-4CA30-0AA0)	TM-E15C24-01 (6ES7193-4CB30-0AA0)	TM-E15C23-01 (6ES7193-4CB10-0AA0)	← Spring terminal
TM-E15S26-A1 (6ES7193-4CA40-0AA0)	TM-E15S24-A1 (6ES7193-4CA20-0AA0)	TM-E15S24-01 (6ES7193-4CB20-0AA0)	TM-E15S23-01 (6ES7193-4CB00-0AA0)	← Screw-type terminal
TM-E15N26-A1 (6ES7193-4CA80-0AA0)	TM-E15N24-A1 (6ES7193-4CA70-0AA0)	TM-E15N24-01 (6ES7193-4CB70-0AA0)	TM-E15N23-01 (6ES7193-4CB60-0AA0)	← Fast Connect
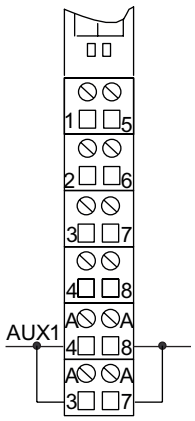	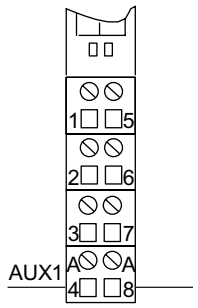	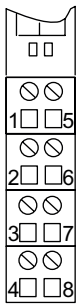	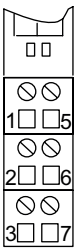	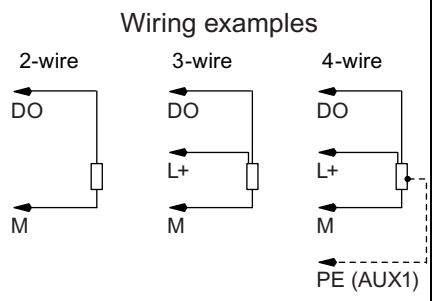

Properties

1

1.1 Digital electronic module 2DO DC24V/2A HF (6ES7132-4BB31-0AB0)

Properties

- Digital electronic module with two outputs
- Output current 2 A per output
- Rated load voltage 24 VDC
- Diagnostics: Wire break
- Diagnostics: Short circuit
- Short-circuit protection
- Suitable for solenoid valves, DC contactors, and indicator lights
- Supports isochronous operation
- Extended temperature range from 0 to 55 °C with vertical installation

Peculiarity

When you connect the 24 VDC rated load voltage to the power module by means of a mechanical contact, depending on the circuit the digital outputs carry the "1" signal for approximately 50 µs. You need to take this into account if you connect the module to fast counters.

General terminal assignment

Note

Terminals 4, 8, A4, A8, A3 and A7 are only available at specified terminal modules.

Terminal assignment for 2DO 24 VDC/2 A HF (6ES7132-4BB31-0AA0)				
Terminal	**Assignment**	**Terminal**	**Assignment**	**Notes**
1	DO_0	**5**	DO_1	• DO_n: Output signal, Channel n • L+: Rated load voltage 24 VDC • M: Ground • n.c.: Not connected (max. 30 V DC can be connected) • AUX1: Protective-conductor terminal or potential bus (freely usable up to 230 VAC)
2	L+	**6**	L+	
3	M	**7**	M	
4	n.c.	**8**	n.c.	
A4	AUX1	**A8**	AUX1	
A3	AUX1	**A7**	AUX1	

Block diagram

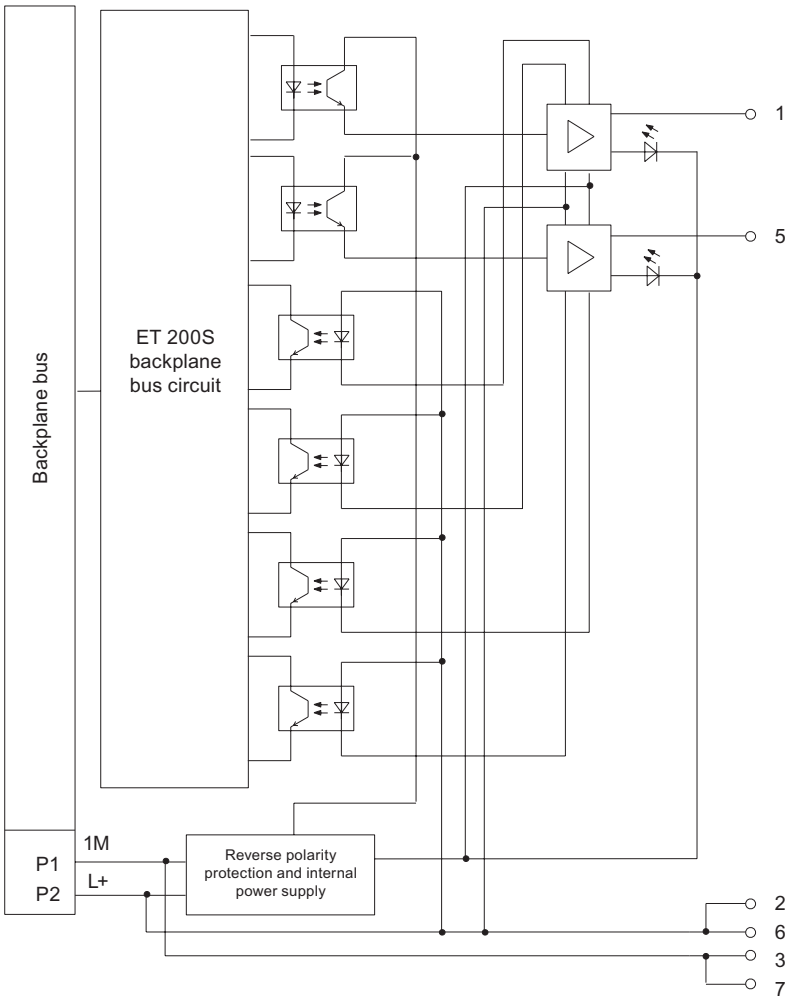

Figure 1-1 Block diagram of the 2DO 24 VDC/2 A HF

2DO 24 VDC/2 A HF analog Technical data (6ES7132-4BB31-0AB0)

Dimensions and weight	
Width (mm)	15
Weight	Approx. 40 g
Module-specific data	
Supports isochronous operation	Yes
Number of outputs	2
Cable length	
• Unshielded	Max. 600 m
• Shielded	Max. 1000 m
Parameter length	3 bytes
Address space	1 byte
Address space (packed)	2 bits

Voltages, currents, potentials	
Rated load voltage L+ (from the power module)	24 VDC
• Polarity reversal	Yes[1]
Total current of the outputs (per module)	4 A
Electrical isolation	
• Between the channels	No
• Between the channels and backplane bus	Yes
Permissible potential difference	
• Between the different circuits	75 VDC / 60 VAC
Insulation tested	500 VDC
Current consumption	
• From the rated load voltage L+ (no load)	Max. 5 mA per channel
Power dissipation of the module	Typically 1.4 W
Status, interrupts, diagnostics	
Status display	Green LED per channel
Diagnostics function	
• Group error	Red "SF" LED
• Diagnostics functions readable	Yes
Data for selecting an actuator	
Output voltage	
• At signal "1"	Min. L+ (-1 V)
Output current	
• At signal "1" – Rated value – Permitted range	 2 A 7 mA to 2.4 A
• With signal "0" (leakage current)	Max. 0.5 mA
Output delay (for resistive load)	
• At "0" to "1"	Max. 100 µs
• At "1" to "0"	Max. 400 µs
Load resistor range	12 Ω to 3.4 kΩ
Lamp load	Max. 5 W
Connecting two outputs in parallel	
• For redundant triggering of a load	Yes (per module)
• To increase performance	No
Control of a digital input	Yes
Switch rate	
• For resistive load	100 Hz
• On inductive load	2 Hz (0.5 H)
• For lamp load	10 Hz
Limitation (internal) of the voltage induced on circuit interruption	Typically L+ (-55 V to -60 V)
Reverse-voltage proof	Yes, if using the same load voltage as at the power module
Short-circuit protection of the output	Yes[2]
• Threshold on	Typically 4 A

[1] Polarity reversal can lead to the digital outputs being connected through.

[2] Per channel

Parameters

2

2.1 Parameters

This table shows the parameters for digital output modules:

Table 2-1 Parameters for digital output modules

2DO 24 VDC/2 A HF	Range of values	Default setting	Applicability
Response to CPU/master STOP	• Substitute a value • Keep last value	Substitute a value	Module
Substitute value [1]	• "0" • "1"	"0"	Channel
Diagnostics: Wire break [2]	• Disable • Enable	Disable	Channel
Diagnostics: Short circuit to M	• Disable • Enable	Disable	Channel
[1] If the interface module or COMPACT module becomes deenergized, the digital output modules will not produce substitute values. Output value = 0. [2] A wire break is only detected in the switched output state.			