AMIKON TECHNICAL DOCUMENTATION

Installation Instructions

Siemens 6ES7390-1AB60-0AA0

S7-300 Mounting Rail

TYPE	LENGTH	USABLE	BONDING
Mounting rail	**160 mm**	**120 mm**	**M6**

For qualified personnel only. Isolate the equipment and follow the complete manufacturer and site safety procedures. This reference does not replace the approved project design or the full installation manual.

01 PREPARATION AND WIRING CHECKS

- Use the 160 mm rail dimensions and confirm 120 mm usable module space.
- Match M6 panel fixings to the original a 10 mm / b 140 mm mounting drawing.
- Maintain 40 mm clearance above/below modules and 20 mm at either side.
- Ensure low-impedance metal contact between the rail and grounded mounting panel.
- Bond the rail through its M6 point using a protective conductor of at least 10 square mm.

02 ORIGINAL WIRING REFERENCE

Original source PDF pages 98, 99, 107. The following pages retain the original Siemens drawings and printed page numbers.

Siemens original documentation and product reference

Dimension of the mounting holes

The mounting hole dimensions for the mounting rail are shown in the table below.

Table 5- 3 Mounting holes for rails

"Standard" mounting rail			2 m mounting rail
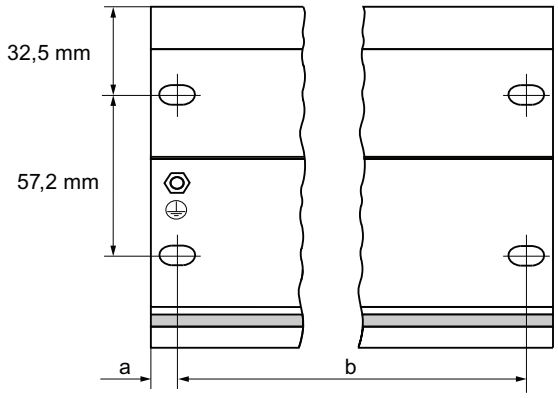			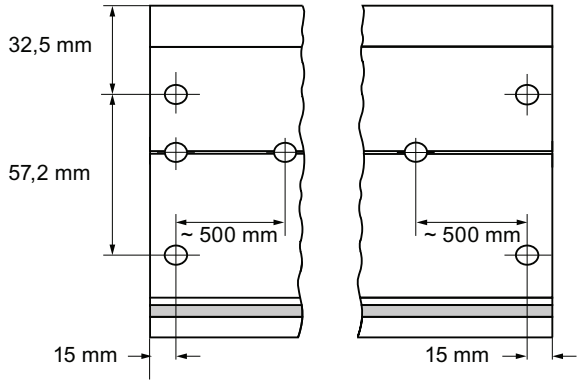
Length of rail	Dimension a	Dimension b	–
160 mm	10 mm	140 mm	
482.6 mm	8.3 mm	466 mm	
530 mm	15 mm	500 mm	
830 mm	15 mm	800 mm	

Fixing screws

You can use the following screw types for mounting the rails:

For ...	you can use ...	Explanation
outer fixing screws	Cylindrical head screw M6 to ISO 1207/ISO 1580 (DIN 84/DIN 85)	Choose a suitable screw length for your assembly. You also need size 6.4 washers to ISO 7092 (DIN 433)
	M6 hexagonal head screw to ISO 4017 (DIN 4017)	
Additional fixing screws (only 2 meter mounting rail)	Cylindrical head screw M6 to ISO 1207/ISO 1580 (DIN 84/DIN 85)	

Installing the mounting rail

1. Install the mounting rails so that sufficient space is available for installing modules and to allow heat dissipation (clearance of at least 40 mm above and below the modules. See the figure below).
2. Mark up the mounting holes on the mounting surface. Drill the holes with a diameter of $6.5^{+0.2}$ mm.
3. Screw the rail (M6 screws) onto the mounting surface.

Note

Always make sure of a low-impedance contact between the rail and a mounting surface, if the latter is a grounded metal panel or equipment mounting panel. On varnished or anodized metals, for instance, use a suitable contacting agent or contact washers.

The figure below shows the clearance required for the installation of an S7-300.

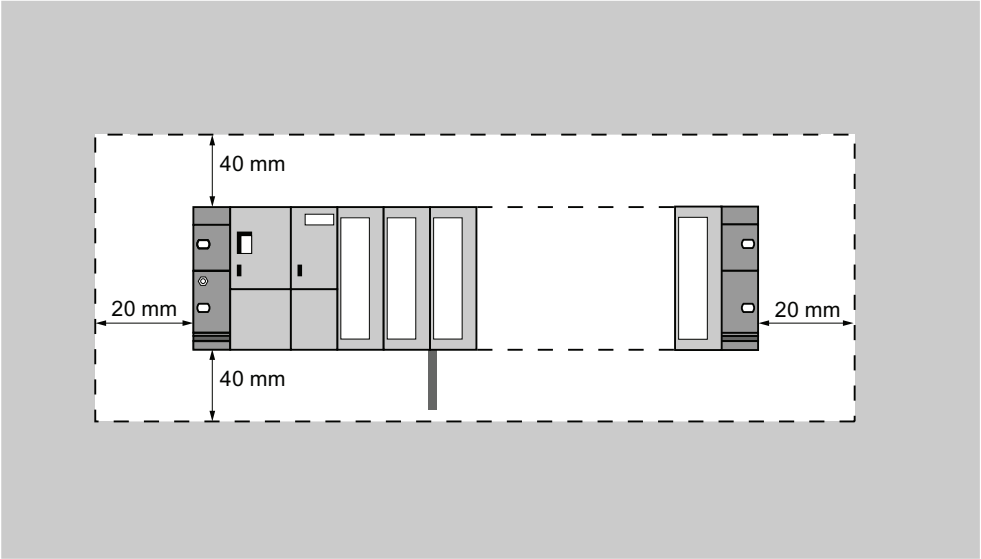

6.2 Bonding the Protective Conductor to the Mounting Rail

Requirement

The mounting rail is fixed onto the mounting surface.

Connecting the protective conductor

Connect the mounting rail to the protective conductor.
The mounting rail is provided with a M6 protective conductor screw for this purpose.

Minimum cross-section of the protective conductor: 10 mm^2

The figure below shows how the protective conductor has to be bonded to the rail.

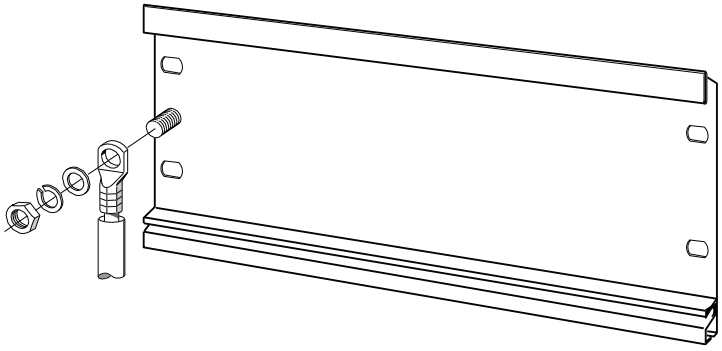

Note

Always make sure of a low-impedance contact between the protective conductor and the rail. You can achieve this by using a low-impedance cable, keeping it as short as possible and contacting it to a large surface.
For example, an S7-300 mounted on a hinged frame must be connected to ground using a flexible grounding strap.